NATIONAL AERONAUTICS AND SPACE ADMINISTRATION

NASA CR-

(NASA-CR-[illegible]) THERMAL AND ENERGY MANAGEMENT [illegible] INVESTIGATIONS UTILIZING AN 0.030-SCALE MODEL (47-0) OF THE SPACE SHUTTLE VEHICLE ORBITER CONFIGURATION [illegible] IN THE NASA RESEARCH CENTER [illegible] X [illegible] G3/16

N76-30268

HC $16.25

Unclas

49190

SPACE SHUTTLE

AEROTHERMODYNAMIC DATA REPORT

JOHNSON SPACE CENTER

HOUSTON, TEXAS

DATA MANagement services

SPACE DIVISION CHRYSLER CORPORATION

July 1976

DMS-DR-2254
NASA CR-144,626

VOLUME 8 OF 13

TERMINAL AREA ENERGY MANAGEMENT REGIME INVESTIGATIONS UTILIZING AN 0.030-SCALE MODEL (47-0) OF THE SPACE SHUTTLE VEHICLE ORBITER CONFIGURATION 140A/B/C/R IN THE AMES RESEARCH CENTER 11 X 11 FOOT TRANSONIC WIND TUNNEL (OA148)

by

P. J. Hawthorne
Rockwell International Space Division

Prepared under NASA Contract Number NAS9-13247

by

Data Management Services
Chrysler Corporation Space Division
New Orleans, La. 70189

for

Engineering Analysis Division

Johnson Space Center
National Aeronautics and Space Administration
Houston, Texas

WIND TUNNEL TEST SPECIFICS:

Test Number:	ARC 11-073
NASA Series Number:	0A148
Model Number:	47-0
Test Dates:	May 5 through May 17, 1975
Occupancy Hours:	220

FACILITY COORDINATOR:

Stuart L. Treon
Mail Stop 227-5
Ames Research Center
Moffett Field, Calif. 94035

Phone: (415) 922-5850

AERODYNAMICS ANALYSIS ENGINEERS:

S. Kraus
J. H. Reichert
Rockwell International
Space Division
12214 Lakewood Blvd.
Mail Code AC07
Downey, Calif. 90241

Phone: (213) 922-4831

PROJECT ENGINEERS:

P. J. Hawthorne
J. Marroquin
M. D. Milam
Rockwell International
Space Division
12214 Lakewood Blvd.
Mail Code AD38
Downey, Calif. 90241

Phone: (213) 922-3785

R. E. Ellington
J. J. Brownson
Ames Research Center
Mail Stop 227-5
Moffett Field, Calif. 94035

Phone: (415) 965-6262

DATA MANAGEMENT SERVICES:

Prepared by: Liaison--D. A. Sarver
Operations--W. B. Meinders

Reviewed by: D. E. Poucher

Approved: J. L. Glynn, Manager
Data Operations

Concurrence: N. D. Kemp, Manager
Data Management Services

Chrysler Corporation Space Division assumes no responsibility for the data presented other than display characteristics.

TERMINAL AREA ENERGY MANAGEMENT

REGIME INVESTIGATIONS UTILIZING AN 0.030-SCALE

MODEL (47-0) OF THE SPACE SHUTTLE VEHICLE

ORBITER CONFIGURATION 140A/B/C/R IN THE

AMES RESEARCH CENTER 11 x 11 FOOT

TRANSONIC WIND TUNNEL (OA148)

by

P. J. Hawthorne, Rockwell International Space Division

ABSTRACT

This report documents data obtained in wind tunnel test OA148.

The objectives of the test series were to:

1) obtain pressure distributions, forces and moments over the vehicle 5 Orbiter in the terminal area energy management (TAEM) and approach phases of flight.

2) obtain elevon and rudder hinge moments in the TAEM and approach phases of flight.

3) obtain body flap and elevon loads for verification of loads balancing with integrated pressure distributions.

4) obtain pressure distributions near the short OMS pods in the high subsonic, transonic and low supersonic Mach number regimes.

Testing was conducted over a Mach number range from 0.6 to 1.4 with Reynolds number variations from 4.57×10^6 to 2.74×10^6 per foot. Model angle-of-attack was varied from -4 to 16 degrees and angles of side slip ranged from -8 to 8 degrees.

TABLE OF CONTENTS

INDEX OF MODEL FIGURES

INDEX OF DATA FIGURES

FIGURE NUMBER	TITLE	CONDITIONS VARYING	PLOTTED COEFFICIENTS SCHEDULE	PAGES
VOLUME 1				
4	VARIATION OF LATERAL DIRECTIONAL AERODYNAMIC CHARACTERISTICS WITH BETA	ALPHA,MACH,BDFLAP, SPDBRK,ELVN-L,ELVN-R, RUDDER	A	1-252
5	VARIATION OF LONGITUDINAL AERODYNAMIC CHARACTERISTICS WITH ALPHA	BETA,MACH,BDFLAP,SPDBRK, ELVN-L,ELVN-R,RUDDER	B	253-507
6	VARIATION OF HINGE MOMENT CHARACTER-ISTICS WITH ALPHA	BETA,MACH,BDFLAP,SPDBRK, ELVN-L,ELVN-R,RUDDER	C	508-762
VOLUME 2				
7	ORBITER FUSELAGE BODY FLAP DEFLECTION 0 DEGREES	ALPHA, MACH PHI, BETA	D	763-864
8	ORBITER FUSELAGE BODY FLAP DEFLECTION 16.3 DEGREES	ALPHA, MACH PHI, BETA	D	865-966
9	LEFT WING BOTTOM SURFACE ELEVON DEFLECTION 0 DEGREES	ALPHA, MACH 2Y/BW, BETA	E	967-1051
10	LEFT WING BOTTOM SURFACE ELEVON DEFLECTION 10 DEGREES	ALPHA, MACH 2Y/BW, BETA	E	1052-1136
11	LEFT WING TOP SURFACE ELEVON DEFLECTION 0 DEGREES	ALPHA, MACH 2Y/BW, BETA	E	1137-1221
12	LEFT WING TOP SURFACE ELEVON DEFLECTION 10 DEGREES	ALPHA, MACH 2Y/BW, BETA	E	1222-1306
13	VERTICAL TAIL SPEEDBRAKE DEFLECTION 0 DEGREES	ALPHA, MACH Z/BV, BETA	F	1307-1374

INDEX OF DATA FIGURES (Concluded)

FIGURE NUMBER	TITLE	CONDITIONS VARYING	PLOTTED COEFFICIENTS SCHEDULE	PAGES
14	VERTICAL TAIL SPEEDBRAKE DEFLECTION 35 DEGREES	ALPHA, MACH Z/BV, BETA	F	1375-1442

PLOTTED COEFFICIENTS SCHEDULE:

A) CY, CYN and CBL versus BETA

B) CN, CA and CLM versus ALPHA

C) CHEO, CHEI, CHETOT and CHBF versus ALPHA

D) CP versus X/LB

E) CP versus X/CW

F) CP versus X/CV

NOMENCLATURE

Symbol	Plot Symbol	Definition
A_b	AB	total Orbiter base area, ft^2
A_i	Ai	area over which P_i acts, ft^2
A_{sb}	ASB	speed brake base area, ft^2
b	BREF, BW	Orbiter wing span, in
b_v	BV	vertical tail reference span, in
C_{A_u}	CAU	Orbiter uncorrected axial force coefficient
C_A	CA	Orbiter axial force coefficient with sting cavity adjusted to average base pressure
C_{A_F}	CAF	Orbiter forebody axial force coefficient.
$C_{A_{sc}}$	CASC	Orbiter sting cavity axial force coefficient.
C_{D_U}	CDU	Orbiter uncorrected drag coefficient
$C_{h_{bf}}$	CHBF	body flap hinge moment coefficient, about hinge line X_o = 1532.0
$C_{h_{ei}}$	CHEI	inner elevon hinge moment coefficient, about hinge line X_o = 1387.0
$C_{h_{eo}}$	CHEO	outer elevon hinge moment coefficient, about hinge line X_o = 1387.0
$C_{H_{e_{TOT}}}$	CHETOT	total right elevon hinge moment coefficient
C_{L_U}	CLU	Orbiter uncorrected lift coefficient
C_ℓ	CBL	Orbiter rolling moment coefficient, body axis system

NOMENCLATURE (Continued)

Symbol	Plot Symbol	Definition
C_m	CLM	Orbiter pitching moment coefficient with sting cavity adjusted to average base pressure, referenced to Orbiter MRC.
C_{m_u}	CLMU	Orbiter uncorrected pitching moment coefficient
C_{m_F}	CLMF	Orbiter forebody pitching moment coefficient referenced to orbiter MRC.
$C_{m_{sc}}$	CLMSC	Orbiter sting cavity pitching moment coefficient, referenced to Orbiter MRC
C_{N_u}	CNU	Orbiter uncorrected normal force coefficient
C_N	CN	Orbiter normal force coefficient with sting cavity adjusted to average base pressure
C_{N_F}	CNF	Orbiter forebody normal force coefficient
$C_{N_{sc}}$	CNSC	Orbiter sting cavity normal force coefficient
C_n	CYN	Orbiter yawing moment coefficient, body axis system
C_{pi}	CPi	surface tap pressure coefficient, port i, $(P_i - P_\infty)/q$
C_Y	CY	Orbiter side force coefficient
$C_{[X][Y]}$	C[X][Y]	base area force and moment coefficients. The first subscript (post fix) designates the type of coefficient, the second the pressure tap and it's associated area. The symbolic vectors [X] and [Y] are defined below.
[X]=		
A	A	axial force
N	N	normal force
Y	Y	side force
m	LM	pitching moment
n	YN	yawing moment
ℓ	BL	rolling moment

NOMENCLATURE (Continued)

Symbol	Plot Symbol	Definition
[Y]=		
1,2,3	1,2,3	areas associated with pressure taps
4,5,6	4,5,6	1 through 6 see figure 2b
sc	SC	sting cavity area
bf	BF	upper body flap area
l_b	LB	Orbiter reference body length, IML nose to X_o = 1528.3, in.
ℓ_{REF}	LREF	longitudinal reference length, Orbiter mean aerodynamic chord, in
	LU/DU	uncorrected lift to drag ratio, CLU/CDU
M	MACH	freestream Mach number
ϕ	PHI	angular cylindrical coordinate position around Orbiter body - deg.
P_i	Pi	pressure at surface tap i, PSF
P_∞	P	freestream static pressure, PSF
P_t	PT	freestream total pressure, PSF
q	Q	freestream dynamic pressure, PSF
	RN/L	unit Reynolds number, million per foot
S	SREF	wing reference area, ft^2
T_t	TTR	freestream total temperature, °R
X_{cp}	XCP/L	center of pressure location referred to l_b
X_o/L_o	X/LB	longitudinal location of body surface, fraction of body length

NOMENCLATURE (Concluded)

Symbol	Plot Symbol	Definition
X/C	X/CW	chordwise location on wing surface, fraction of local chord
X/C_V	X/CV	chordwise location on vertical tail, fraction of local chord
Z/B_V	Z/BV	spanwise location on vertical tail, fraction of vertical tail span
η	2Y/BW	spanwise location on wing, fraction of semi span
X_{mrp}	XMRP	longitudinal location of moment reference point
X_T	XT	longitudinal moment transfer distance from Orbiter balance center to Orbiter MRC, in
Y_{mrp}	YMRP	lateral location of moment reference point
Z_T	ZT	vertical moment transfer distance from Orbiter balance center to Orbiter MRC, in
α	ALPHA	angle of attack, degrees
β	BETA	angle of sideslip, degrees
δ_{bf}	BDFLAP	body flap deflection, degrees
δ_{eL}	ELVN-L, L-ELVN	left elevon deflection, degrees
δ_{eR}	ELVN-R, R-ELVN	right elevon deflection, degrees
δ_r	RUDDER	rudder deflection, degrees
δ_{sb}	SPDBRK	speed brake deflection, degrees
Z_{mrp}	ZMRP	vertical location of moment reference point
	$$	mask character used to indicate all possible values for this test 01 through 85

REMARKS

During the course of the test it was necessary to replumb the scanivalves. The resultant time loss necessitated deleting the priority 4 runs which incorporated the use of the metric vertical tail.

Data obtained from pressure taps 184, 296 and 347 are suspect due to slow leaks noticed while leak checking individual model pressure taps.

Body flap hinge moment data for datasets RE8001 through RE8005 have a -15% drift while datasets RE8006 and RE8007 have a +10% drift due to data recording system errors. System checks during the remainder of the test indicate a system error of less than 4% for body flap hinge moment data.

Rolling moment data has an approximate -.00[illegible] bias in the coefficient. The reason for this was not determined, but possible sources are fabrication tolerances and/or differential stiffness of the left and right elevon panels.

Distortion of the instrumented elevon shaft appears to have occurred around run 310 due to model assembly difficulties and the maximum loads encountered at these test conditions. A comparison of measured elevon deflection before and after the test with the nominal setting is presented below:

Elevon Panel	Nominal	Pre-Test	Post-Test
Inboard right	-10	-9° 36'	-8° 55'
	-4	-3° 34'	-2° 55'
	0	+0° 10'	+1° 02'
	4	+4° 26'	+4° 28'
	10	+10°32'	+10°39'
Outboard right	-10	-9° 36' *	-8° 15'
	-4	-3° 34' *	-2° 20'
	0	+0° 10' *	+1° 05'
	4	+4° 26' *	+3° 59'
	10	+10°32' *	+10°18'

* Inboard only was measured but was the same as outboard panel (see Ref 2)

CONFIGURATION INVESTIGATED

The Rockwell International model 47-0 Space Shuttle Orbiter Vehicle was utilized in this test series. The model was originially constructed to -140A/B lines, but was modified prior to this test with the addition of the -140C OMS pods, six inch bevelled interpanel elevon gaps and uncovered RCS forward thrustor parts. To denote these additions, the additional designations "C" (for -140C OMS pods) and "R" (for RCS thrustors) were added, and the slashes deleted for convenience on Table II(designated "-140 ABCR").

In data sets RE8069 to 085 the RCS thrustor ports in the nose were filled reverting the configuration to -140A/B/C modified with body B_{26}.

The following nomenclature denotes the model components:

Component	Description
B_{26}	140A/B fuselage (VL70-000140A, VL70000140B)
B_{70}	140A/B fuselage (VL70-000140A, VL70-000145, VL70-000140B, VL70-000143A, VL70-000139) with RCS thrustor parts (VL70-08501, VL70-08502, VL70-08296)
C_9	140A/B basic canopy (VL70-000140A, VL70-000143A)
E_{44}	140A/B elevons (VL70-000200, VL70-006089, VL70-006092) with six inch bevelled interpanel gaps, no flipper door
F_9	140A/B body flap (VL70-000140B, VL70-000200)
M_{16}	OMS-RCS pods for 140C Orbiter
N_{28}	OMS basic nozzles
R_5	basic Orbiter rudder (VL70-000146A, VL70-000095)
V_8	basic Orbiter vertical tail (VL70-000140A, VL70-000146A)
W_{116}	basic 140A/B wing (VL70-000140B, VL70-000200)

CONFIGURATIONS INVESTIGATED (Concluded)

Designated configurations are:

-140ABCR $\equiv B_{70}\ C_9\ E_{44}\ F_9\ M_{16}\ N_{28}\ R_5\ V_8\ W_{116}$

-140 ABC $\equiv B_{26}\ C_9\ E_{44}\ F_9\ M_{16}\ N_{28}\ R_5\ V_8\ W_{116}$

TEST FACILITY DESCRIPTION

The Ames Research Center Unitary Plan 11- by 11-Foot Transonic Wind Tunnel is a closed-circuit, air-medium, variable-density facility capable of attaining Mach numbers from 0.6 to 1.4 at Reynolds numbers from 1.7×10^6/ft to 9.4×10^6/ft. The test section is 22 feet long, and models are installed on internal strain-gauge balances mounted to sting-type support systems.

Shadowgraph and Schlieren photographic equipment is available, and pressure transducer instrumentation is provided.

Tunnel operating temperature is 580°R. Extended high Reynolds number runs are restricted by power availability.

DATA REDUCTION

Standard NASA/Ames data reduction equations were used to reduce forces, moments, and pressures to coefficient form. Orbiter main balance force and moment coefficients were computed using the following equations:

Symbol	Orbiter main balance measurement
NF	Normal Force
AF	Axial Force
PM	Pitching Moment
YM	Yawing Moment
SF	Side Force
RM	Rolling Moment

$$C_{A_u} = AF / (q\ S) \qquad C_{L_u} = C_{N_u} \cos\alpha - C_{A_u} \sin\alpha$$

$$C_{N_u} = NF / (q\ S) \qquad C_{D_u} = C_{N_u} \sin\alpha + C_{A_u} \cos\alpha$$

$$C_Y = SF / (q\ S)$$

$$C_{m_u} = \frac{PM}{qSc} + \frac{C_A \cdot Z_T}{c} - \frac{C_N \cdot X_T}{c}$$

$$C_\ell = \frac{R\ M}{qSb} + \frac{C_Y \cdot Z_T}{b}$$

$$C_n = \frac{YM}{qSb} - \frac{C_Y \cdot X_T}{b}$$

Moment Transfer Distances

X_T = 0.572 in.

Y_T = 0

Z_T = 0.450 in.

The Moment Reference Center about which the data was reduced is located at

	Orbiter (Full Scale)
X_o	1076.68
Y_o	0
Z_o	375.00

Balance coefficients were grouped into datasets RE80$$.

DATA REDUCTION (Continued)

Hinge moments and hinge moment coefficients were computed using the following equations:

Elevon hinge moments (inboard and outboard).

$$HM_{e_I} = (HM1-HM2)\ (M1/D1) + HM1$$

$$HM_{eo} = (HM3-HM4)\ (M3/D3) + HM3$$

where

HMi = measured moment on strain gage i

D1 = distance between gages 1 and 2, .49335 in.

D3 = distance between gages 3 and 4, .45800 in.

M1 = moment transfer distance for inboard elevon, .93825 in.

M3 = moment transfer distance for outboard elevon, .92250 in.

Elevon hinge moment coefficients

Inboard, $C_{H_{e_I}} = H_{M_{e_I}} / (q\ S_e\ c_e)$

Outboard, $C_{H_{eo}} = H_{M_{e_o}} / (q\ S_e\ c_e)$

Total, $C_{H_{e_{TOT}}} = C_{H_{e_I}} + C_{H_{e_o}}$

S_e = elevon reference area, 0.189 ft.^{2}

c_e = elevon reference MAC, 2.721 in.

Body flap hinge moment coefficient

$$C_{H_{bf}} = HM_{bf} / (q\ S_{bf}\ c_{bf})$$

HM_{bf} = measured body flap hinge moment

S_{bf} = body flap reference area, 0.12834 ft.^{2}

c_{bf} = body flap reference MAC, 2.541 in.

Hinge moment coefficients are part of datasets RE8X$$.

Pressure coefficients for all model orifice pressure measurements were computed using this equation:

$$C_{P_i} = (P_i - P_\infty)/q$$

where P_i = pressure at model orifice i

P_∞ = tunnel static pressure

q = tunnel dynamic pressure

Other data reduction constants include:

S = wing reference area, 2.4210 ft.^{2}

c = wing reference chord, 14.2443 in.

b = wing reference span, 28.1004 in.

After the data had been reduced to coefficient form by NASA/AMES,DMS interpolated it to nominal α's and β's. Then 2 types of base and sting cavity area coefficients were calculated. When they are applied 3 types of balance coefficient data exists. These can be distinguished by the last subscript (symbolic name) or postfix (mnemonic name). The key is given below

U ~ uncorrected coefficients.

~ coefficients with sting cavity pressure corrected to base pressure (without a suffix).

F ~ forebody coefficients with the base area pressure corrected to freestream pressure.

Only the correction coefficients associated with base pressure tapes 1 through 4 were applied to the longitudinal orbiter coefficients.

Figure 2b illustrates the base area associated with each pressure tap. Alphabetic characters bf and sc designate body flap and sting cavity areas, respectively. Base area coefficient names have a numeric character which designates the pressure tap number. Base coefficients for vertical tail areas 5 and 6 were calculated but not applied to the total orbiter coefficients. Base area coefficient values are tabulated in the appendix. A detailed derivation of these coefficients follows. It is concluded by a matrix of base area geometric properties.

The orbiter sting cavity force and moment coefficients were computed as:

$$C_{A_{sc}} = \frac{(C_{p2} - C_{p1})}{S} A_1$$

$$C_{N_{sc}} = \frac{(C_{p2} - C_{p1})}{S} A_1 \tan 12.55^\circ$$

$$C_{m_{sc}} = C_{A_{sc}} \frac{Z_t}{c} - C_{N_{sc}} \frac{X_{sc}}{c}$$

The orbiter force and moment coefficients corrected for the difference between balance cavity pressure and orbiter base pressure:

$$C_A = C_{A_u} - C_{A_{sc}}$$

$$C_N = C_{N_u} - C_{N_{sc}}$$

$$C_m = C_{m_u} - C_{m_{sc}}$$

These orbiter coefficients are part of datasets KE80$$.

DATA REDUCTION (Continued)

Orbiter base force and moment coefficients were calculated as follows:

Upper base area

$$C_{N2u} = -(C_{p2}\ A_{2u} \tan 16^\circ)/S$$

$$C_{A2u} = -(C_{p2}\ A_{2u})/S$$

$$C_{m2u} = C_{A2u} \frac{Z_{2u}}{c} - C_{N2u} \frac{X_{2u}}{c}$$

Lower base area

$$C_{N2_\ell} = -(C_{p2}\ A_{2_\ell} \tan 10^\circ)/S$$

$$C_{A2_\ell} = -(C_{p2}\ A_{2_\ell})/S$$

$$C_{m2_\ell} = C_{A2_\ell} \frac{Z_{2\ell}}{c} - C_{N2_\ell} \frac{X_{2\ell}}{c}$$

Total base area, A_2

$$C_{N2} = C_{N2u} + C_{N2_\ell}$$

$$C_{A2} = C_{A2_u} + C_{A2_\ell}$$

$$C_{m2} = C_{m2_u} + C_{m2_\ell}$$

OMS pod base area, A_3

(This assumes the surface is perpendicular to the orbiter X-axis)

$$C_{A3} = -(C_{p3}\ A_3)/S$$

$$C_{m3} = C_{A3} \frac{Z_3}{c}$$

OMS pod base area, A_4

(This assumes the surface is perpendicular to the orbiter X axis)

$$C_{A4} = -(C_{p4}\ A_4)/S$$

$$C_{m4} = C_{A4}\ \frac{Z_4}{c}$$

Coefficients for the above areas are grouped into datasets EE8D$$.

Upper surface of body flap

$$C_{A_{bf}} = \frac{-C_{p_{bf}}\ A_{bf}}{S}\ \sin\ (\delta_{bf} + 6.88°)$$

$$C_{N_{bf}} = \frac{-C_{p_{bf}}\ A_{bf}}{S}\ \cos\ (\delta_{bf} + 6.88°)$$

$$C_{m_{bf}} = \frac{C_{A_{bf}}\ Z_{bf}}{c} - \frac{C_{N_{bf}}\ X_{bf}}{c}$$

where:

$$C_{p_{bf}} = \frac{C_{p200} + C_{p201} + C_{p204} + C_{p205}}{4}$$

The orbiter force and moment coefficients adjusted to free stream pressure (forebody coefficients).

$$C_{A_F} = C_{A_u} - \left(\frac{-C_{p1}\ A_1}{S} + \sum_{i=2}^{4} C_{A_i} + C_{A_{bf}}\right)$$

$$C_{N_F} = C_{N_u} - \left(C_{N_2} + C_{N_{bf}}\right)$$

$$C_{m_F} = C_{m_u} - \left(\sum_{i=2}^{4} C_{m_i} + C_{m_{bf}}\right)$$

These orbiter coefficients are part of datasets KE8O$$.

Vertical tail "undercarriage" area, A_5

Top Segment:

$$C_{N5t} = (C_{p5}\ A_{5t}\ \tan\ 63.75°)/S$$

$$C_{A5t} = -(C_{p5} A_{5t})/S$$

$$C_{m5t} = C_{A5t} \frac{Z_{5t}}{c} - C_{N5t} \frac{X_{5t}}{c}$$

Middle Segment:

$$C_{N5m} = (C_{p5} A_{5m} \tan 26.1426°)/S$$

$$C_{A5m} = -(C_{p5} A_{5m})/S$$

$$C_{m5m} = C_{A5m} \frac{Z_{5m}}{c} - C_{N5m} \frac{X_{5m}}{c}$$

Bottom Segment:

$$C_{N5b} = (C_{p5} A_{5b} \tan 21.94°)/S$$

$$C_{A5b} = -(C_{p5} A_{5b})/S$$

$$C_{m5b} = C_{A5b} \frac{Z_{5b}}{c} - C_{N5b} \frac{X_{5b}}{c}$$

Total area, A_5:

$$C_{N5} = C_{N5t} + C_{N5m} + C_{N5b}$$

$$C_{A5} = C_{A5t} + C_{A5m} + C_{A5b}$$

$$C_{M5} = C_{m5t} + C_{m5m} + C_{m5b}$$

Vertical Tail base area, A_6:

Segment above rudder

$$C_{N6u} = (C_{p6} A_{6u} \tan 63.75°)/S$$

$$C_{A6u} = (C_{p6} A_{6u})/S$$

$$C_{m6u} = C_{A6u} \frac{Z_{6u}}{c} - C_{N6u} \frac{X_{6u}}{c}$$

Rudder/Speed brake base:

$$C_{A6_\ell} = C_{p6}\, A_{6\cdot_\ell}\, [\sin(\theta - 55.1667^\circ)\cos 55.1667^\circ + \cos(\theta - 55.1667^\circ)\sin 55.1667^\circ \cos(\delta r)]/S$$

$$C_{N6_\ell} = C_{p6}\, A_{6\cdot_\ell}\, [\sin(\theta - 55.1667^\circ)\sin 55.1667^\circ - \cos(\theta - 55.1667^\circ)\cos 55.1667^\circ \cos(\delta r)]/S$$

$$C_{Y6_\ell} = C_{p6}\, A_{6\cdot_\ell} \cos(\theta - 55.1667^\circ)\sin \delta r/S$$

$$C_{m6_\ell} = [C_{A6_\ell}(Z_{6_\ell}) - C_{N6}(X_{6_\ell})]/c$$

$$C_{\ell 6_\ell} = [C_{Y6_\ell}(Z_{6_\ell})]/b$$

$$C_{n6_\ell} = -[C_{Y6}(X_{6_\ell})]/b$$

$$\theta = \tan^{-1}\left[\frac{5.456791 + .573209\cos\left(\frac{\delta SB}{2}\right)}{3.797715 - .823715\cos\left(\frac{\delta SB}{2}\right)}\right]$$

$$A_{6\cdot_\ell} = A_{6_\ell}/\sin\theta$$

Total area, A_6:

$$C_{A6} = C_{A6u} + C_{A6\ell}$$

$$C_{N6} = C_{N6u} + C_{N6\ell}$$

$$C_{Y6} = C_{Y6\ell}$$

$$C_{m6} = C_{m6u} + C_{m6\ell}$$

$$C_{\ell 6} = C_{\ell 6\ell}$$

$$C_{n6} = C_{n6_\ell}$$

Vertical tail area coefficient data are grouped into datasets GE8D$$.

BASE GEOMETRIC PROPERTIES MATRIX

Description	Sub-script	Area A - ft.^{2}	Distance between Centroid and MRC vertical Z - in.	Distance between Centroid and MRC longitudinal X - in.
Sting cavity	sc	0.076699	0.45	12.199
Body flap upper surface	bf	0.128	- 2.64	13.659
Orbiter balance cavity	1	0.076699	0.45	12.199
Orbiter base orifice 2 lower	2ℓ	0.133889	- 1.32	12.677
Orbiter base orifice 2 upper	2u	0.0818055	2.07	12.384
Lower OMS pod	3	0.030472	2.68	NA
Upper OMS pod	4	0.074166	3.63	NA
Vertical tail "undercarriage" bottom	5b	0.003565	4.612	12.395
Vertical tail "undercarriage" middle	5m	0.002610	5.336	14.079
Vertical tail "undercarriage" top	5t	0.000341	5.97	15.185
Vertical tail above rudder	6u	0.000798	12.656	18.482
Base area of speed brake	6ℓ	Varies with speed brake deflection		

NOTES: Sting cavity and Orbiter balance cavity are synonymous.

NA - not applicable.

DATA REDUCTION (Continued)

δ_{sb}	$A_{6\ell}$ ft^2
0	0.0066036
25	0.0456000
35	0.0621000
55	0.0950800
85	0.1551400

$$X_{6\ell} = 15.045 + 1.442277\ [1-\cos\ (\delta sb/2)]$$

$$Z_{6\ell} = 9.755 + 0.501827\ [1-\cos\ (\delta sb/2)]$$

Standard DMS loads cycle test procedures were used to process the OA148 pressure data. First numerous pressure distribution plots were released. Analysis of these produced bad pressure data list. This list is reproduced below:

DATA REDUCTION (Continued)

OA148 Bad Pressure Data

Component	Dataset No.	Tap No.	β	α
Fuselage (B)	1	143	4	-4
	1	148	4	-4
	1	150	4	-4
	1	152	4	-4
	1	186	4	-4
	1	187	4	-4
	1	189	4	-4
	1	191	4	-4
	1	193	4	-4
Lower Wing (L)	1 → 7	231	ALL	ALL
	1 → 85	290	ALL	ALL
	1	316	4	-4
	1	317	4	-4
	1	337	4	-4
	1	338	4	-4
	1	358	4	-4
	1	378	4	-4
	1	379	4	-4
	1	398	4	-4
Upper Wing (U)	1 → 7	247	ALL	ALL
	1	357	4	-4
Body Flap (F)	24	205	-4	12
Speed Brake (K)	1 → 85	822	ALL	ALL
Vertical Tail (V)	8	443	ALL	ALL
	ALL	1444	ALL	ALL
	79	1453	-4	-4
	79	1454	-4	-4

Note: Wind tunnel pressure data tabulated in the appendix have the original bad data values.

these points were eliminated from further processing. The remaining data were interpolated to nominal alpha and beta values. Processing was completed with the release of a magnetic tape containing the final interpolated pressure coefficients.

This report contains plots and tabular listings for both force and pressure data. Plotted force data illustrates lateral-directional, longitudinal and hinge moment characteristics of the configuration tested. Plotted pressure data illustrates the effect of several control deflections and attitude changes on local pressure distributions. The multiple volume appendix contains a tabulated listing of the basic force and pressure data. Listing of the interpolated base area coefficients is also included. The plotted and tabulated data are arranged in the following manner:

VOLUME NO.	CONTENTS
1	Force data plots showing lateral-directional longitudinal and hinge moment characteristics.
2	Plots illustrating the effect of control surface deflections on fuselage, wing and vertical tail pressure distributions.

DATA REDUCTION (Concluded)

VOLUME NO.	CONTENTS
3	Tabulated Force Data

Dataset	Data type
RE80$$	source balance coefficients
RE8X$$	source hinge moment coefficients
RE8Y$$	source base pressure coefficients
KE80$$	interpolated balance coefficients adjusted for cavity pressure and forebody coefficients
EE8D$$ FE8D$$	interpolated base and cavity area coefficients
GE8D$$	interpolated vertical tail base area coefficients

Tabulated Pressure Data

	Component	Fourth Character*	Page
4, 5	orbiter fuselage	B	1
6,7,8	lower wing	L	1271
9,10,11	upper wing	U	3147
12	upper body flap	F	5405
12	lower body flap	G	5774
13	speed brake	K	6143
13	vertical tail	V	6547

* The fourth character in each dataset identifier (i.e., XE8BXX, B for Fuselage) represents the individual component.

REFERENCES

1. SD75-SH-0106, "Pretest Information for OA148 of the 0.03-Scale 47-0 Pressure Loads Space Shuttle Model in the 11 x 11 Foot Leg of the NASA/ARC Unitary Plan Wind Tunnel," April 18, 1975.

2. MG-75-07-11, Rockwell International Corporation Internal Letter: "Model design Dimensional Varification Task 36: Elevon Deflection Angle Check of the 0.03-Scale SSV Model 47-0 (140A/B Configuration)". SAS/WTO/75-283, July 29, 1975.

TABLE I

TEST : 0A148

DATE : May 1975

TEST CONDITIONS

MACH NUMBER	REYNOLDS NUMBER (per foot)	DYNAMIC PRESSURE (pounds/sq. inch)	STAGNATION TEMPERATURE (degrees Fahrenheit)
0.60	4.57×10^6	4.166	120
0.90	3.41×10^6	4.166	120
1.10	3.05×10^6	4.166	120
1.25	2.86×10^6	4.166	120
1.40	2.74×10^6	4.166	120
			--

BALANCE UTILIZED: ARC Task MK XX A

	CAPACITY:	ACCURACY:	COEFFICIENT TOLERANCE:
NF	3000 lbf/gage		
SF	1500 lbf/gage		
AF	600 lbf		
PM	27,000 in-lbf		
RM	4000 in-lbf		
YM	10,500 in-lbf		

COMMENTS: Maximum normal and side force dependent upon point of application

TABLE II.

TEST: OA 148 — DATA SET RUN NUMBER COLLATION SUMMARY — DATE: POST TEST

DATA SET IDENTIFIER	TIME SUBPATCH	α	β	δ_R	δ_{SB}	δ_{SF}	δ_{eL}	δ_{eR}	α = -4	0	4	8	12	16	MACH NUMBERS
2E8001	-140 ABCR	B	D	0	55	16.5	0	0	32	33	34	35	58	59	1.4
002		A	D						38	39	40	41	42		1.25
003		A	D						43	44	45	46	47		1.1
004		A	D						48	49	50	51	52		0.9
005		A	C						53	54	55	56	57		0.6
006	-140 ABCR	A	C	0	55	22.5	0	0	60	61	62	63	64		0.6
007		A	D						68	66	67	69	70		0.9
008	-140 ABCR	B	D	0	85	22.5	0	0	71	72	73	74	75	76	1.4
009		A	D						77	78	79	80	81		1.25
010		A	D						82	83	84	85	86		1.1
011		A	D						87	88	89	90	91		0.9
012		A	C						92	93	94	95	96		0.6

COEFFICIENTS

A_α = -4, 0, 4, 8, 12

B_α = -4, 0, 4, 8, 12, 16

C_β = -8, -4, 0, 4, 8

D_β = -4, 0, 4

NASA MSFC-MAF

TABLE II - Continued.

TEST: OA 148 — DATA SET RUN NUMBER COLLATION SUMMARY — DATE: POST TEST

RUN NUMBER	CONFIGURATION	α	β	δ_e	δ_{st}	δ_{aF}	δ_{aL}	δ_{aR}	α -4	α 0	α 4	α 8	α 12	α 16	MACH NUMBERS			
RE8 013	-140 ABCR	B	D	0	35	0	0	0	97	98	99	100	101	102		1.4		
014		A	D						103	104	105	106	107			1.25		
015		A	D						108	109	110	111	112			1.1		
016		A	D						113	114	115	116	117			0.9		
017		A	C						118	119	120	121	122			0.6		
018	-140 ABCR	B	D	0	0	-11?	0	0	123	124	125	126	127	128		1.4		
019		A	D						131	129	130	132	133			1.25		
020		A	D						134	135	136	137	138			1.1		
021		A	D						139	140	141	142	143			0.9		
022		A	C						144	145	146	147	148			0.6		
023	-140 ABCR	B	D	0	0	0	0	0	149	150	151	152	153	154		1.4		
024		A	D						155	156	157	158	159			1.25		
025		A	D						160	161	162	163	164			1.1		
026		A	D						165	166	167	168	169			0.9		
027		A	C						170	171	172	173	174			0.6		

TEST RUN NUMBER

COEFFICIENTS

α β

CHARTS

NASA-MSFC-VAF

TABLE II. - Continued.

TEST: [illegible] 48 | DATA SET RUN NUMBER COLLATION SUMMARY | DATE: Post Test

DATA SET IDENTIFICATION	CONFIGURATION	α	β	S_F	S_{SB}	S_{BF}	S_{EL}	S_{PR}	α -4	0	4	8	12	16	MACH NUMBERS			
RE8028	140 ABCR	B	D	-10	35	163	10	0	175	176	177	178	179	180		1.4		
029		A	D						181	182	183	184	185			1.25		
030		A	D						186	187	188	189	190			1.1		
031		A	D						191	192	193	194	195			0.9		
032		A	C						196	197	198	199	200			0.6		
033	140 ABCR	B	D	+10	35	163	0	10	201	202	203	204	205	206		1.4		
034		A	D						207	208	209	210	211			1.25		
035		A	D						212	213	214	215	216			1.1		
036		A	D						217	218	219	220	221			0.9		
037		A	C						222	223	224	225	226			0.6		
038	140 ABCR	B	D	+10	85	163	10	10	227	228	229	230	231	232		1.4		
039		A	D						233	234	235	236	237			1.25		
040		A	D						238	239	240	241	242			1.1		
041		A	D						243	244	245	246	247			0.9		
042		A	C						248	249	250	251	252			0.6		

COEFFICIENTS

α OR β SCHEDULES

TABLE II. - Continued.

TEST: OA 148 | DATA SET RUN NUMBER COLLATION SUMMARY | DATE: POST TEST

DATA SET IDENTIFIER	TIME DURATION									α						MACH NUMBERS
		α	β	δ_{R2}	δ_{R3}	δ_{B2}	δ_{B3}	δ_{B4}	-4	0	4	8	12	16		
258 043	60 ABCR	A	D	0	55	225	10	10	253	254	255	256	257			0.9
044		A	C						258	259	260	261	262			0.6
045	40 ABCR	A	D	0	55	225	4	4	263	264	265	266	267			0.9
046		A	C						268	269	270	271	272			0.6
047	40 ABCR	B	D	-10	55	163	4	4	273	274	275	276	277	278		1.4
048		A	D						279	280	281	282	283			1.25
049		A	D						284	285	286	287	288			
050		A	D						289	290	291	292	293			0.9
051		A	C						294	295	296	297	298			0.6
052	40 ABCR	B	D	-10	55	163	-4	+4	299	300	301	302	303	304		1.4
053		A	D						305	306	307	308	309			1.25
054		A	D						310	311	312	313	314			
055		A	D						315	316	317	318	319			0.9
056		A	C						320	321	322	323	324			0.6

COEFFICIENTS

α β

NASA-MSFC-MAF

TABLE II. - Continued.

TEST: CA 43 | DATA SET RUN NUMBER COLLATION SUMMARY | DATE: [illegible]

DATA SET IDENTIFIER	CONFIGURATION	α	β	δ_R	δ_{SB}	δ_{SC}	δ_{SL}	δ_{SR}	X -4	0	4	8	12	16	MACH NUMBERS			
[illegible]	[illegible]	B	D	10	55	[illegible]	4	-4	325	326	327	328	329	330		.6		
[illegible]		A	D						331	332	333	334	335			.35		
[illegible]		A	D						[illegible]	337	[illegible]	[illegible]	[illegible]					
[illegible]		A	D						[illegible]	340	341	[illegible]	[illegible]			[illegible]		
[illegible]		A	D						[illegible]	[illegible]	[illegible]	[illegible]	352			[illegible]		
350	[illegible] 4C4BCR	B	D	-5	55	[illegible]	-4	-4	351	352	353	[illegible]	355	[illegible]		.6		
[illegible]		A	D						357	358	359	[illegible]	[illegible]			.35		
[illegible]		A	D						362	363	[illegible]	[illegible]	[illegible]					
[illegible]		A	D						367	368	[illegible]	370	[illegible]			[illegible]		
[illegible]		A	C						372	373	374	[illegible]	[illegible]			[illegible]		
[illegible]	[illegible] 4C4BCR	A	D	0	55	[illegible]	-4	-4	[illegible]	[illegible]	[illegible]	[illegible]	[illegible]			.5		
[illegible]		A	C						[illegible]	[illegible]	[illegible]	[illegible]	[illegible]			[illegible]		
[illegible]	[illegible]	A	D	0	55	[illegible]	-10	-10	[illegible]	[illegible]	[illegible]	[illegible]	[illegible]			[illegible]		
[illegible]		A	C						[illegible]	[illegible]	[illegible]	[illegible]	[illegible]			[illegible]		

COEFFICIENTS

α or β COEFFICIENTS

NASA MSFC-MAF

TABLE II. - Concluded.

TEST: [illegible] 45 | DATA SET RUN NUMBER COLLATION SUMMARY | DATE: POST TEST

DATA SET NUMBER	INFORMATION								X						MACH NUMBERS			
		α	β	δ_{OL}	δ_{OR}	δ_{DF}	δ_{DL}	δ_{DR}	-4	0	+4	8	12	16				
283	-40 ABC	B	D	-5	55	16.3	-10	-10	397	398	399	400	401	402		.4		
[illegible]		A	D						403	404	405	406	407			.25		
[illegible]		A	D						408	409	410	411	412			[illegible]		
[illegible]		A	D						413	414	415	416	417			[illegible]		
[illegible]		A	C						418	419	420	421	422			[illegible]		
[illegible]	40 ABC	B	D	+10	0	-11.7	+10	-10	423	424	425	426	427	428		.4		
[illegible]		A	D						429	430	431	432	433			.25		
[illegible]		A	D						434	435	436	437	438			[illegible]		
[illegible]		A	D						439	440	441	442	443			[illegible]		
[illegible]		A	C						444	445	446	447	448			[illegible]		
[illegible]	-40 ABC	B	E	10	0	-11.7	-10	+10	449	450	451	452	453	454		.4		
[illegible]		A	E						455	456	457	458	459			.25		
283		A	E						460	461	462	463	464			[illegible]		
284		A	F						465	466	467	468	469			0.9		
285		A	O						470	471	472	473	474			[illegible]		

TEST RUN NUMBER

COEFFICIENTS

α & β SCHEDULES

F_β = 0 @ α = -4 0 8 16
-4 0 4 @ α = 4 12

F_β = 0 @ α = -4 0 8 12
-4 0 4 @ α = 4

NASA-MSFC-MAF

TABLE III

MODEL DIMENSIONAL DATA

MODEL COMPONENT : BODY - B_{24}

GENERAL DESCRIPTION : Configuration 140A/B orbiter fuselage

NOTE: B_{24} is identical to B_{24} except underside of fuselage has been refaired to accept W_{116}.

MODEL SCALE: 0.030 MODEL DRAWING: SS-A00147, Release 12

DRAWING NUMBER : VL70-000143B, -000200, -000205, -006089, -000145, VL70-000140A, -000140B

DIMENSIONS :	FULL SCALE	MODEL SCALE
Length (OML: Fwd Sta. X_0 -235), In.	1293.3	38.799
Length (IML: Fwd Sta X -238), In.	1290.3	38.709
Max Width (@ X_0 = 1528.3), In.	264.0	7.920
Max Depth (@ X_0 = 1464), In.	250.0	7.500
Fineness Ratio	0.264	0.264
Area - Ft^2		
Max. Cross-Sectional	340.88	0.3068
Planform		
Wetted		
Base		

TABLE III (Continued)

MODEL COMPONENT : BODY - B_{70}

GENERAL DESCRIPTION : Configuration 140A/B orbiter fuselage with forward fuselage RCS thruster ports, otherwise B_{70} is identical to B_{36}.

MODEL SCALE: 0.030

DRAWING NUMBER : VL70-000140A, -000140B, -000143B, -000145, -000200, VL70-000205, -006089, -008501, -008502, -008296

DIMENSIONS :

	FULL SCALE	MODEL SCALE
Length (OML: Fwd Sta X_0=235), In.	1293.3	38.799
Length (IML: Fwd Sta X_0 =238), In.	1290.3	38.709
Max Width (@ X_0 = 1528.3), In.	264.0	7.920
Max Depth (@ X_0 = 1464), In.	250.0	7.500
Fineness Ratio	0.264	0.264
Area - Ft^2		
Max. Cross-Sectional	340.88	0.3068
Planform		
Wetted		
Base		

TABLE III (Cont'd)

MODEL COMPONENT : CANOPY - C_9

GENERAL DESCRIPTION : Configuration 3A. Canopy used with fuselage B_{26}.

MODEL SCALE: 0.030 MODEL DWG: 88-A00147, Release 12

DRAWING NUMBER : V170-000143A

DIMENSIONS .	FULL SCALE	MODEL SCALE
Length (X_0=434.643 to 578), In.	143.357	4.301
Max Width (@ X_0 = 513.127), In.	152.412	4.572
Max Depth (@ X_0 = 485.0), In.	25.00	0.750
Fineness Ratio		
Area		
Max. Cross-Sectional		
Planform		
Wetted		
Base		

TABLE III (Cont'd)

MODEL COMPONENT ELEVON - E_{44}

GENERAL DESCRIPTION 6.0 In. F.S. cave machined into E_{44} elevon. Flipper doors centerbody pieces, and tipscals are not simulated. (Data are for one of two sides.)

MODEL SCALE: 0.030

DRAWING NUMBER

DIMENSIONS

	FULL SCALE	MODEL SCALE
Area - Ft^2	210.0	0.189
Span (equivalent), In.	349.2	10.476
Inb'd equivalent chord, In.	118.0	3.54
Outb'd equivalent chord, In.	55.19	1.656
Ratio movable surface chord / total surface chord		
At Inb'd equiv. chord	0.2096	0.2096
At Outb'd equiv. chord	0.4004	0.4004
Sweep Back Angles, degrees		
Leading Edge	0.00	0.00
Trailing Edge	- 10.056	- 10.056
Hingeline	0.0	0.0
Area Moment (Product of Area & $\bar{c}$), Ft^3	1587.25	0.0429
Mean Aerodynamic Chord, In.	90.7	2.721

TABLE III (Cont'd)

MODEL COMPONENT : BODY FLAP - F_9

GENERAL DESCRIPTION : Configuration 140A/B

MODEL SCALE: 0.030

DRAWING NUMBER : VL70-000140B, -000200

DIMENSIONS :

	FULL SCALE	MODEL SCALE
Length (Chord), In.	84.7	2.541
Max Width , In.	262.308	7.869
Max Depth , In.	23.00	0.690
Fineness Ratio		
Area - Ft^2		
Max. Cross-Sectional		
Planform	142.60	0.128
Wetted		
Base	41.90	0.0377

TABLE III (Cont'd)

MODEL COMPONENT : OMS POD - M_{16}

GENERAL DESCRIPTION : Configuration 140C orbiter OMS pod - short pod. External contour is to referenced drawings with 1/2" added to simulate TPS.

MODEL SCALE: 0.015

DRAWING NUMBER : VL70-008401, -008410

DIMENSIONS :	FULL SCALE	MODEL SCALE
Length (OMS Fwd Sta X_0 =1310.5), In.	258.50	7.755
Max Width (@ X_0 = 1511), In.	136.8	4.104
Max Depth (@ X_0 = 1511), In.	74.70	2.241
Fineness Ratio	2.484	2.484
Area - Ft^2		
Max. Cross-Sectional	58.865	0.053
Planform		
Wetted		
Base		

TABLE III (Cont'd)

MODEL COMPONENT: OMS NOZZLES - N_{28}

GENERAL DESCRIPTION: Configuration 140A/B orbiter OMS nozzles.

MODEL SCALE: 0.030

DRAWING NUMBER: VL70-000140A (Location), SS-A00106, Release 9 (Contour)

DIMENSIONS:	FULL SCALE	MODEL SCALE
MACH NO.		
Length - In.		
Gimbal Point to Exit Plane		
Throat to Exit Plane		
Diameter - In.		
Exit		
Throat		
Inlet		
Area - ft^2		
Exit		
Throat		
Gimbal Point (Station) - In.		
Left Nozzle		
X_0	1518.0	45.54
Y_0	- 88.0	- 2.64
Z_0	492.	14.76
Right Nozzles		
X_0	1518.0	45.54
Y_0	88.0	2.64
Z_0	492.0	14.76
Null Position - Deg.		
Left Nozzle		
Pitch	15°49'	15°49'
Yaw	12°17'	12°17'
Right Nozzle		
Pitch	15°49'	15°49'
Yaw	12°17'	12°17'

TABLE III (Cont'd)

MODEL COMPONENT RUDDER - R_5

GENERAL DESCRIPTION Configuration 140C orbiter rudder (identical to configuration 140A/B rudder).

MODEL SCALE: 0.030

DRAWING NUMBER VL70-000146B, 000095

DIMENSIONS	FULL SCALE	MODEL SCALE
Area - Ft^2	100.15	0.090
Span (equivalent), In.	201.00	6.030
Inb'd equivalent chord, In.	91.585	2.748
Outb'd equivalent chord, In.	50.833	1.525
Ratio movable surface chord/ total surface chord		
At Inb'd equiv. chord	0.400	0.400
At Outb'd equiv. chord	0.400	0.400
Sweep Back Angles, degrees		
Leading Edge	34.83	34.83
Trailing Edge	26.25	26.25
Hingeline	34.83	34.83
Area Moment (Product of area & $\bar{c}$), Ft^3	610.92	0.0165
Mean Aerodynamic Chord, In.	73.2	2.196

TABLE III (Cont'd)

MODEL COMPONENT: VERTICAL - V_8

GENERAL DESCRIPTION: Configuration 140C orbiter vertical tail.

(Identical to configuration 140A/B vertical tail.)

MODEL SCALE: 0.030

DRAWING NUMBER: VL70-000140C, -000146B

DIMENSIONS:	FULL SCALE	MODEL SCALE
TOTAL DATA		
Area (Theo) - Ft^2		
Planform	413.253	0.372
Span (Theo) - In.	315.72	9.472
Aspect Ratio	1.675	1.675
Rate of Taper	0.507	0.507
Taper Ratio	0.404	0.404
Sweep-Back Angles, Degrees.		
Leading Edge	45.000	45.000
Trailing Edge	26.25	26.25
0.25 Element Line	41.13	41.13
Chords:		
Root (Theo) WP	268.50	8.055
Tip (Theo) WP	108.47	3.254
MAC	199.81	5.994
Fus. Sta. of .25 MAC	1463.35	43.901
W.P. of .25 MAC	635.52	19.066
B.L. of .25 MAC	0.0	0.0
Airfoil Section		
Leading Wedge Angle - Deg.	10.0	10.0
Trailing Wedge Angle - Deg.	14.92	14.92
Leading Edge Radius	2.0	0.060
Void Area	13.17	0.0019
Blanketed Area	0.0	0.0

TABLE III (Cont'd)

MODEL COMPONENT: WING-W_{116}

GENERAL DESCRIPTION: Configuration 4

NOTE: Identical to W_{114} except airfoil thickness. Dihedral angle is along - trailing edge of wing.

MODEL SCALE: 0.030

TEST NO.

DWG. NO. V170-000140A, -000200

DIMENSIONS:	FULL-SCALE	MODEL SCALE
TOTAL DATA		
Area (Theo.) Ft^2		
Planform	2690.00	2.421
Span (Theo In.	936.68	28.10
Aspect Ratio	2.265	2.265
Rate of Taper	1.177	1.177
Taper Ratio	0.200	0.200
Dihedral Angle, degrees	3.500	3.500
Incidence Angle, degrees	0.500	0.500
Aerodynamic Twist, degrees		
Sweep Back Angles, degrees		
Leading Edge	45.000	45.000
Trailing Edge	- 10.056	- 10.056
0.25 Element Line	35.209	35.209
Chords:		
Root (Theo) B.P.0.0.	689.24	20.677
Tip, (Theo) B.P.	137.85	4.136
MAC	474.81	14.244
Fus. Sta. of .25 MAC	1136.83	34.105
W.P. of .25 MAC	290.58	8.717
B.L. of .25 MAC	182.13	5.464
EXPOSED DATA		
Area (Theo) Ft^2	1751.50	1.576
Span, (Theo) In. BP108	720.68	21.620
Aspect Ratio	2.059	2.059
Taper Ratio	0.245	0.245
Chords		
Root BP108	562.09	16.863
Tip 1.00 $\frac{b}{2}$	137.85	4.136
MAC	392.83	11.785
Fus. Sta. of .25 MAC	1185.98	35.579
W.P. of .25 MAC	295.30	8.829
B.L. of .25 MAC	251.77	7.555
Airfoil Section (Rockwell Mod NASA) XXXX-64		
Root $\frac{b}{2}$ =	0.113	0.113
Tip $\frac{b}{2}$ =	0.120	0.120
Data for (1) of (2) Sides		
Leading Edge Cuff		
Planform Area Ft^2	[illegible]	0.102
Leading Edge Intersects Fus M. L. @ Sta	[illegible]	15.0
Leading Edge Intersects Wing @ Sta	[illegible]	30.720

TABLE IV.

FUSELAGE PRESSURE TAP LOCATIONS –

ORBITER ~ IN.			Φ RADIAL LOCATION ~ DEGREES																				
FULL	MODEL	X_o/L_o	0	20	40	55	70	90	105	110	120	135	140	150	151	156	162	165	169	174	180		
235	7.05	0	7																				
245	7.35	.008	8					9															
265	7.95	.023	11	12	13	14	15	16			17			18									
295	8.85	[illegible]		24	25	26	27	28			29			30									
325	9.75	.070		36	37	38	39	40			41			42									
330	10.40	[illegible]	47	48	49	50	51	52			53			54							55		
420	13.20	.158																		59			
450	13.50	.166	60	61	62	63	64	65			66			67					68				
465	13.95	.177													73		74						
[illegible]	15.00	.204	75	76	77	78	79	80			81		82	83				84			85		
[illegible]	[illegible]	.251	89		90		91	92			93			94				95					
625	18.75	.301	98		99		100	101			102			103				104					
725	21.75	.376	107		108		109	110			111			112				113					
880	26.40	.437	116		117		118	119			120			121				122					
980	29.40	.574	125		126																		
1080	32.40	.652	128		129		130	131			132			133				134					
1180	35.40	.729	137		138		139	140			141			142									

TABLE IV. - Concluded.

FUSELAGE PRESSURE TAP LOCATIONS

ORBITER-IN.			Φ RADIAL LOCATION ~ DEGREES																							
FULL	MODEL	X_0/L_0	0	20	40	55	70	90	105	110	120	135	140	150	151	156	162	165	169	174	180	305	320	340	# TAPS	Σ # TAPS
1245	37.35	.779	145		146		147	148	149		150	151		152				153			154				10	10
1300	39.0	.821	156		157		158	159	160		161	162		163							164				9	19
1375	41.25	.879	166		167		168	169	170		171	172		173				174							9	28
1430	42.9	.921	176		177		178	179	180		181	182		183				184							9	37
1480	44.4	.960	186		187		188	189	190		191	192		193				194							9	46
1530	45.9	.999								196 198	197 199														4	50

TABLE V.

X/C	Y/b	LEFT WING PRESSURE TAP LOCATIONS																No TAPS	Σ No TAPS
.235	.110	X/C	0	.041	.113	.247	.429	.547	.633	.727	.793								9
		TOP	208	209	210	211	212	213	214	215	216							9	
		BOT	—	—	—	—	—	—	—	—	—							0	
.299	.140	X/C	0	.010	.020	.050	.086	.229	.362	.497		.703	.834	.865	.900	.965			34
		TOP	217	218	219	220	221	222	223	224		225	226	227	228	229		3	
		BOT		230	231	232	233	234	235	236		237	238	239	240	241		12	
.364	.170	X/C	0	.010	.020	.050	.086	.163	.246	.390		.637	.798	.838	.879	.919	.955		61
		TOP	242	243	244	245	246	247	248	249		250	251	252	253	254	255	14	
		BOT		256	257	258	259	260	261	262		263	264	265	266	267	268	13	
.427	.200	X/C	0	.010	.020	.050	.083	.177	.274	.402	.565	.760	.808	.857	.905	.953	.100		89
		TOP	269	270	271	272	273	274	275	276	277	278	279	280	281	282		14	
		BOT		283	284	285	286	287	288	289	290	291	292	293	294	295	296	14	
.534	.250	X/C	0	.010	.020	.050	.080	.150	.250	.400	.550	.725	.775	.850	.900	.950			116
		TOP	297	298	299	300	301	302	303	304	305	306	307	308	309	310		14	
		BOT		311	312	313	314	315	316	317	318	319	320	321	322	323		13	

TABLE V. - Concluded

η	Y/b	LEFT WING PRESSURE TAP LOCATIONS																No TAPS	Σ TAPS
.641	300	X/C	0	.010	.020	.050	.150	.250	.400	.550	.700	.775	.850	.900	1.00				
		TOP										333	334	335				3	103
		BOT										344	345	346	347			4	
.673	315	X/C	0	.010	.020	.050	.150	.250	.400	.550	.700	.775	.850	.900	1.00				
		TOP	324	325	326	327	328	329	330	331	332							9	120
		BOT		336	337	338	339	340	341	342	343							3	
.780	365	X/C	0	.010	.020	.050	.150	.250	.650	.750	.850	.950							
		TOP	349	350	350	351	352	[illegible]	354	355	356	357						10	159
		BOT		358	359	360	361	362	363	364	365	366						9	
.887	415	X/C	0	0.0	.020	.050	.150	.250	.400	.600	.750	.900	1.0						
		TOP	367	368	369	370	371	372	373	374	375	376						10	179
		BOT		377	378	379	380	381	382	383	384	385	386					10	
.972	455	X/C	0	.020	.069	.157	.345	.503	.620	.862									
		TOP	387	388	389	390	391	392	393	394								8	194
		BOT		395	396	397	398	399	400	401								7	
1.0	46234	X/C	.418	.723															
		TOP	402	403														2	196
		BOT																	

TABLE VI.

ORBITER VERTICAL TAIL & SPEED BRAKE

PRESSURE TAP LOCATIONS

VERTICAL (LH ONLY)		X/C_V											
Z_0 FULL SCALE	Z_0 MODEL SCALE	X_V	0	.025	.05	.15	.30	.52	.685	.775	.90	NO TAPS	Σ NO TAPS
550	16.5	.153	430	431	432	433	434	435	436	437		9	5
600	18.0	.316	438	439	440	441	442	443	444	445	[illegible]	9	17
645	19.35	.455							451	452	453	3	20
670	20.70	.595	447	448	449	450	451	452	453	454	455	9	29
720	21.6	.720							453	454	455	3	32
765	22.95	.840	456	457	458	459	460	461	462	463	464	9	41
792	23.76	.925	465	466	467	468	469	470	471	472	473	9	50

SPEED BRAKE (RH INSIDE)		X/C_V							
Z_0 FULL SCALE	Z_0 MODEL SCALE	$X/58$	.0	.25	.40	.65	.90	NO TAPS	Σ NO TAPS
600	18.0	.110	801	802	803	804	805	5	5
630	18.9	.254	806	807	808	809	810	5	10
666	19.8	.407	811	812	813	814	815	5	15
690	20.7	.567	816	817	818	819	820	5	20
720	21.6	.706	821	822	823	824	825	5	25
750	22.5	.856	826	827	828	829	830	5	30

TABLE VII.

BODYFLAP PRESSURE TAP LOCATIONS

ORBITER ~ X_o			ϕ ~ DEGREES			
FULL SCALE	MODEL SCALE	X_o/L_o	0	40	No. TAPS	Σ No TAPS
1535 U	46.65	1.018	200	201	2	2
1535 L	46.65	1.018	202	203	2	4
1590 U	47.70	1.046	204	205	2	6
1590 L	47.70	1.046	206	207	2	8

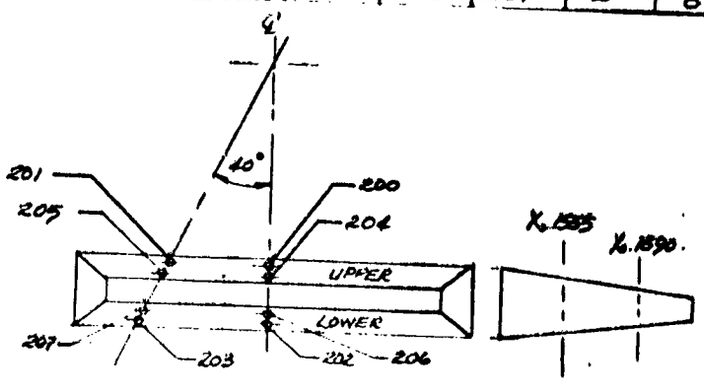

LOOKING FORWARD.

Notes:

1. Positive directions of force coefficients, moment coefficients, and angles are indicated by arrows
2. For clarity, origins of wind and stability axes have been displaced from the center of gravity

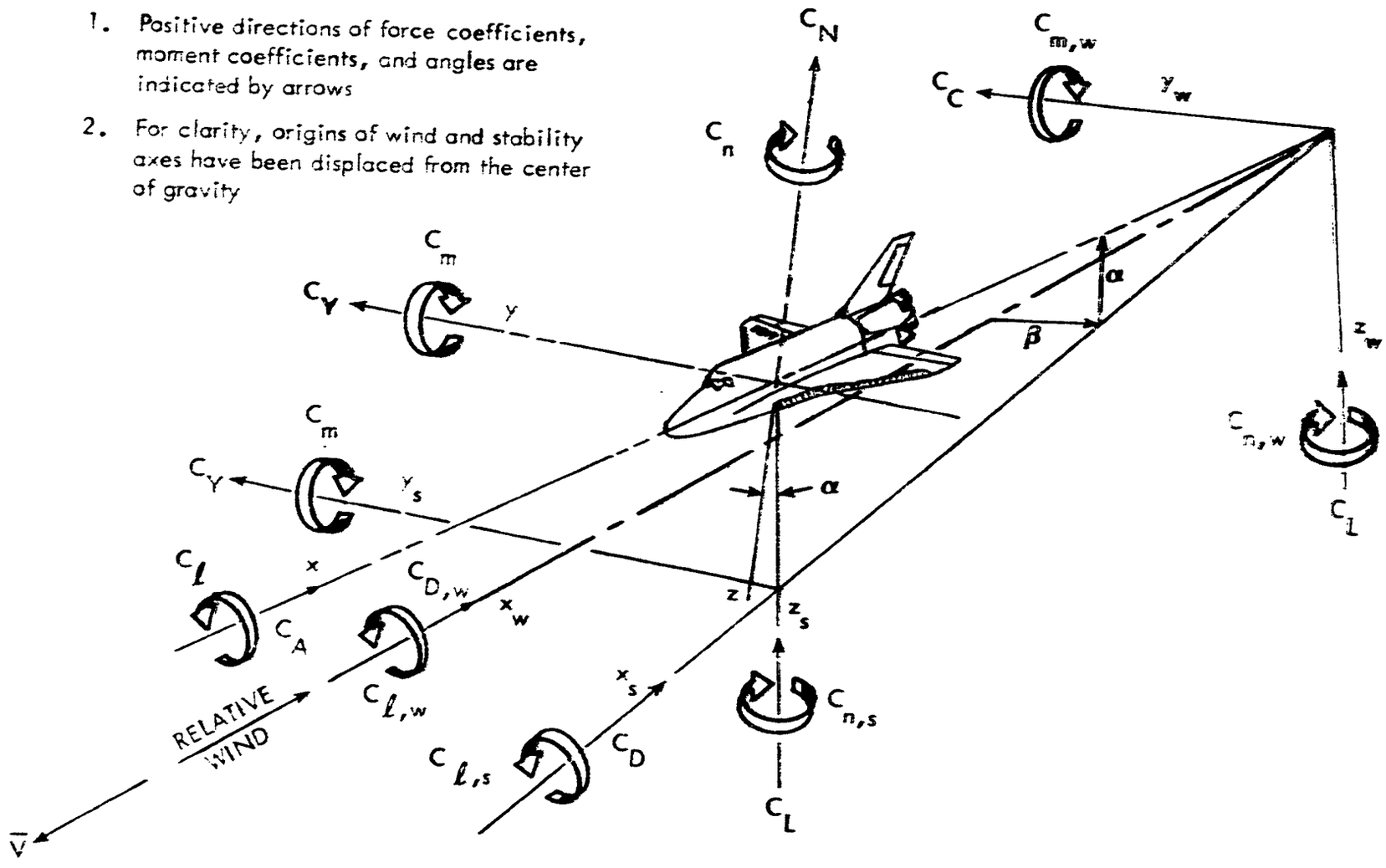

a. Orbiter Axis Systems

Figure 1. - Axis systems and sign conventions

RUDDER AND SPEED BRAKE DEFLECTIONS
(PARALLEL TO THE FRL)

	Maximum Deflections	
	Vehicle [illegible]	Test CA148
δ_F	22.8	± 10
δ_{SB}	87.2	85
δ_e	-35/+20	± 10
δ_{BF}	-11.7/+22.5	-11.7/+22.5

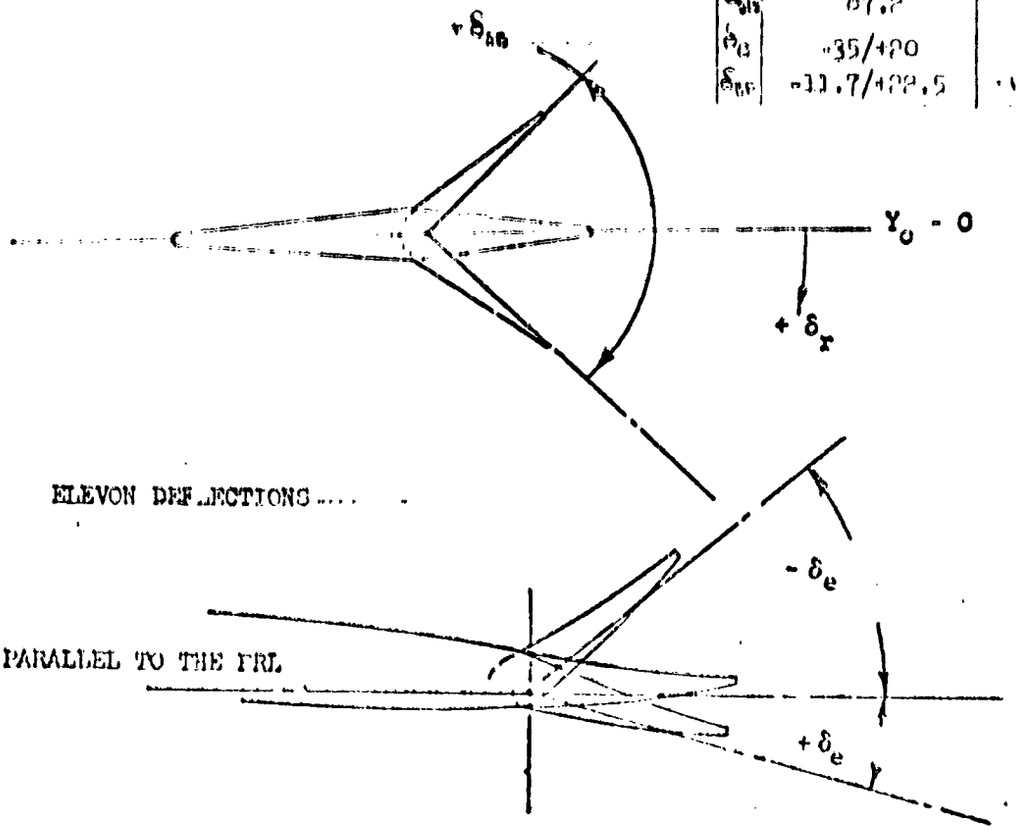

BODY FLAP DEFLECTIONS

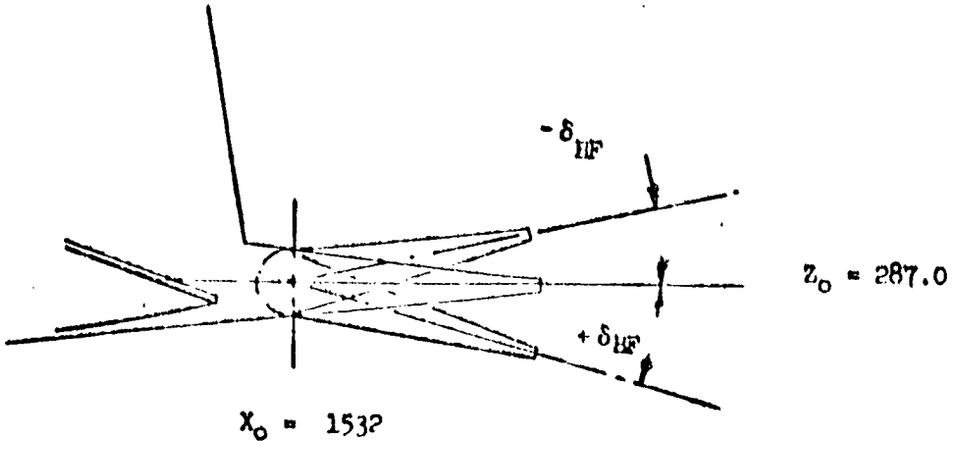

b. Definition of Angular Measurements

Figure 1. - Continued.

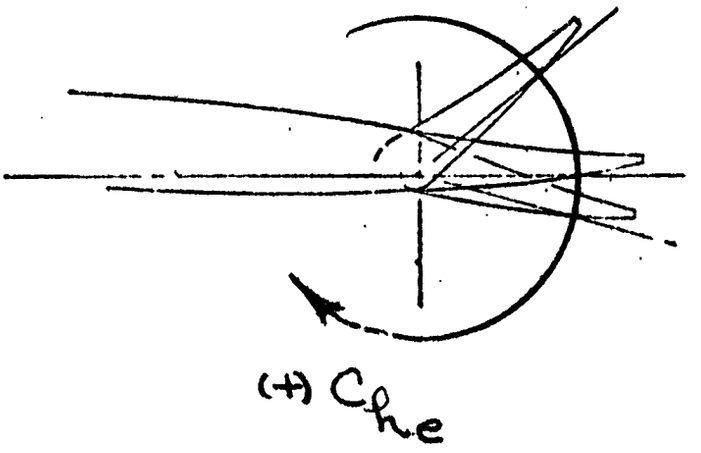

c. Elevon Hinge Moment Sign Convention

Figure 1. - Concluded.

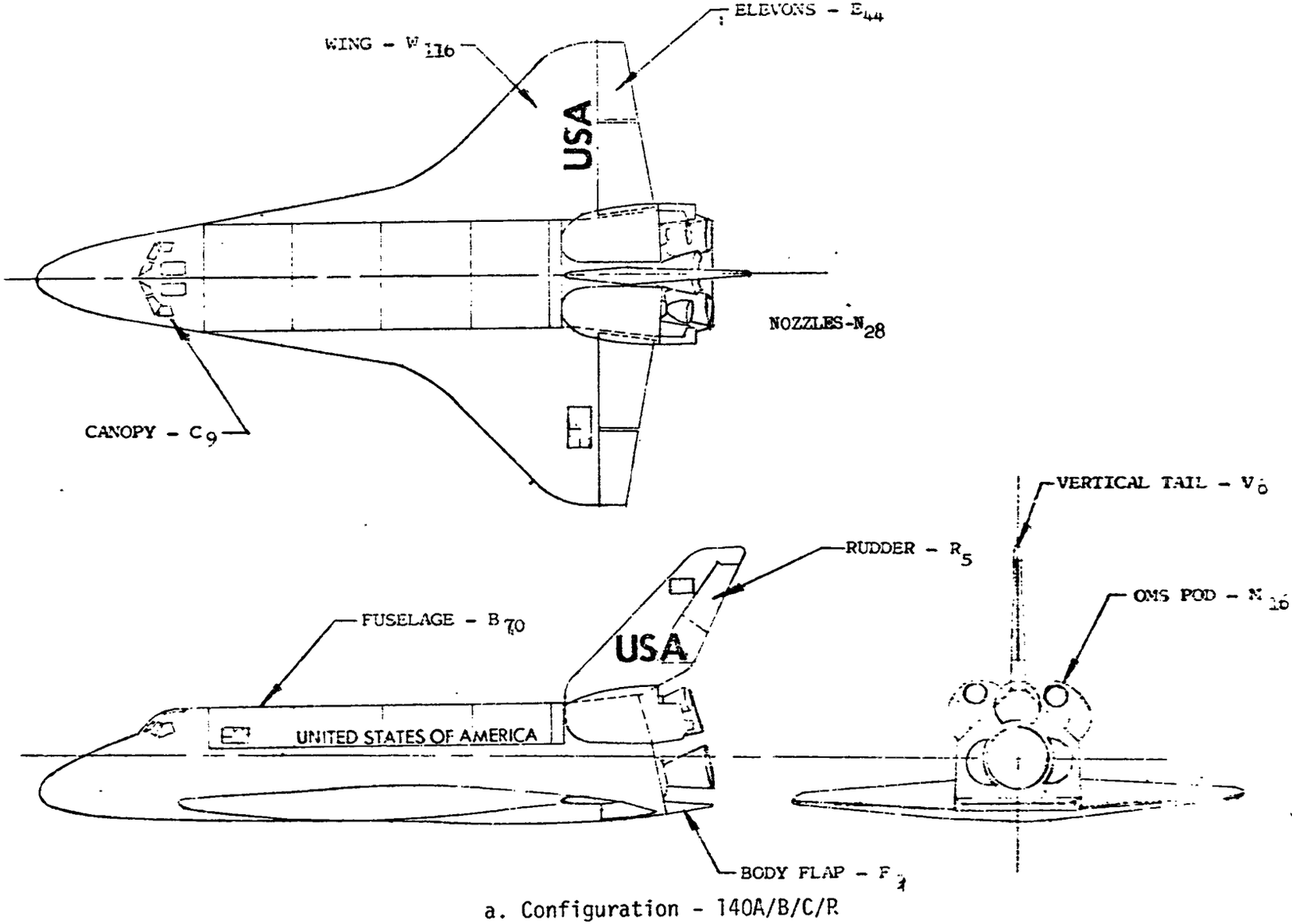

a. Configuration - 140A/B/C/R

Figure 2. - Model sketches.

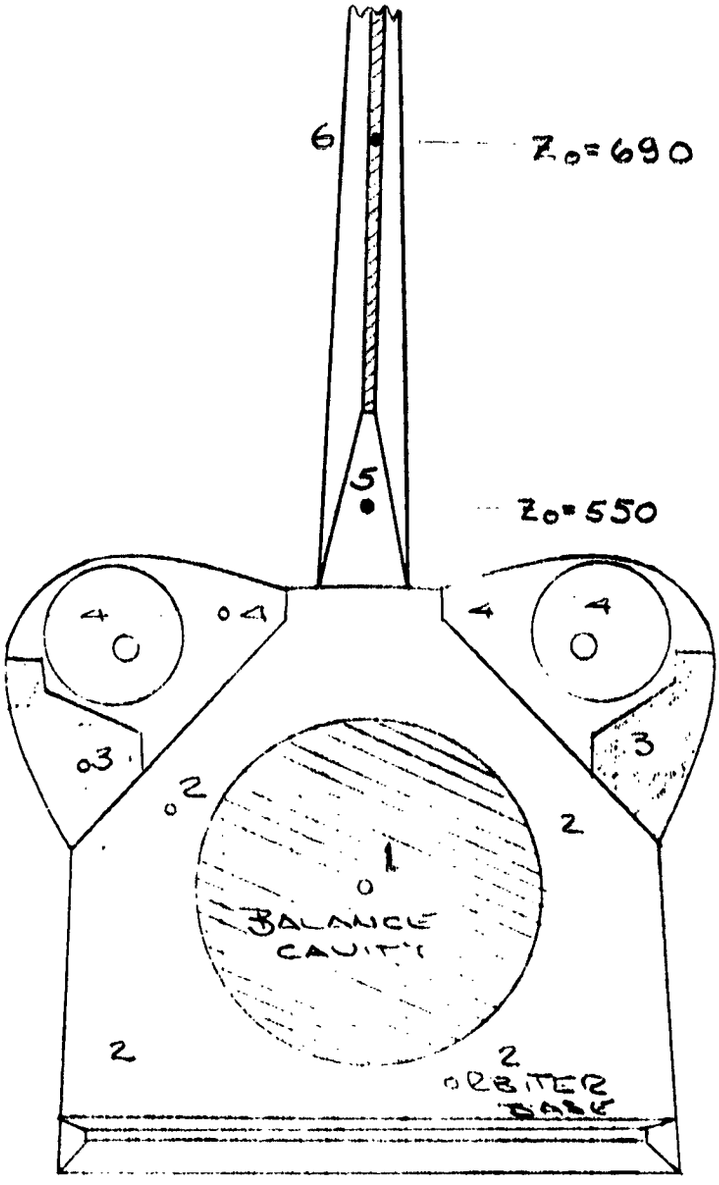

AREA NO.	PROJECTED AXIAL VALUE
A1	0.076699 ft²
A2	0.215695 ft²
A3	0.034072 ft²
A4	0.074167 ft²

b. Base Pressure Taps and Areas

Figure 2. - Continued.

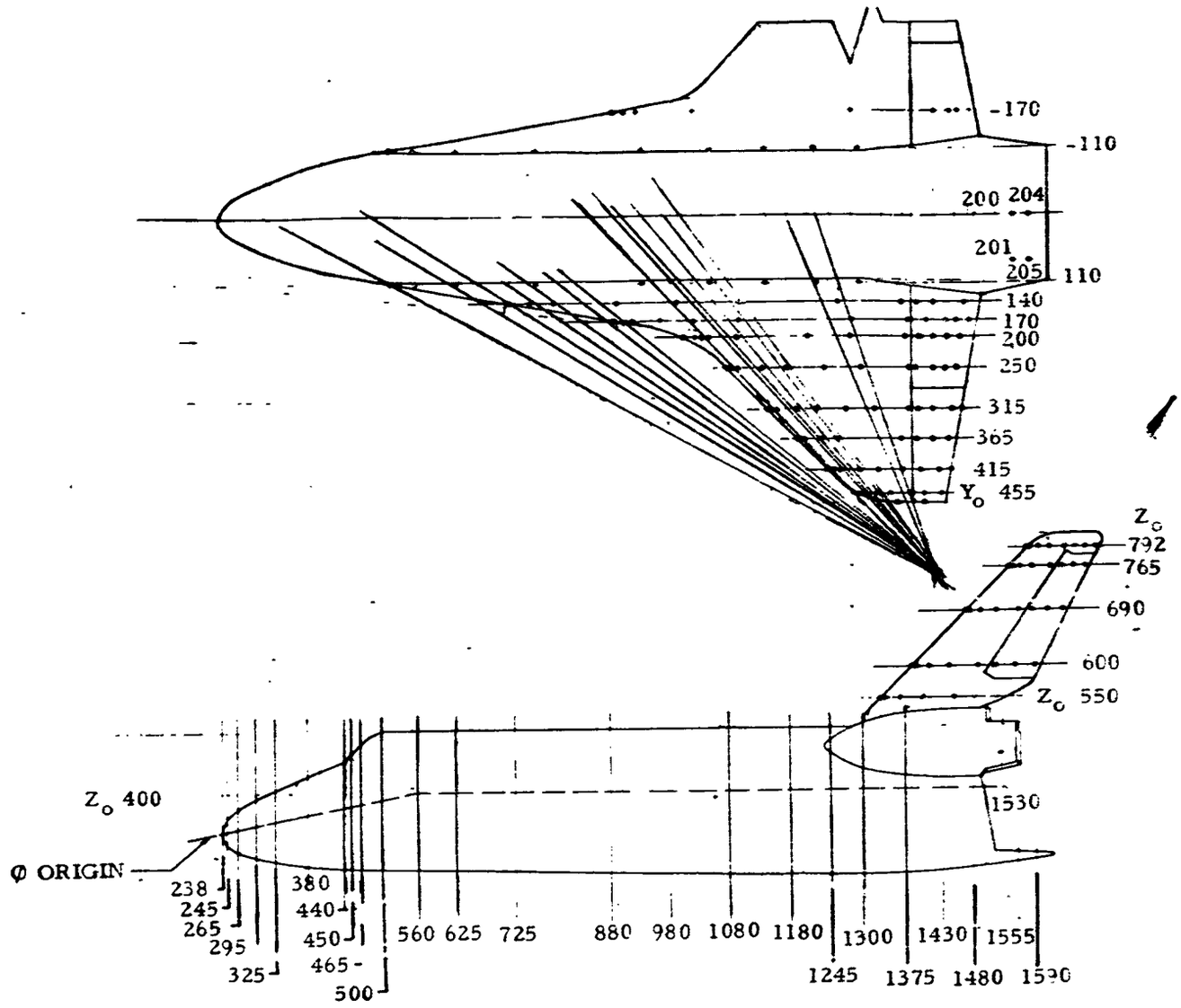

c. Fuselage, Vertical Tail, and Wing Pressure Tap Locations
Figure 2. - Continued.

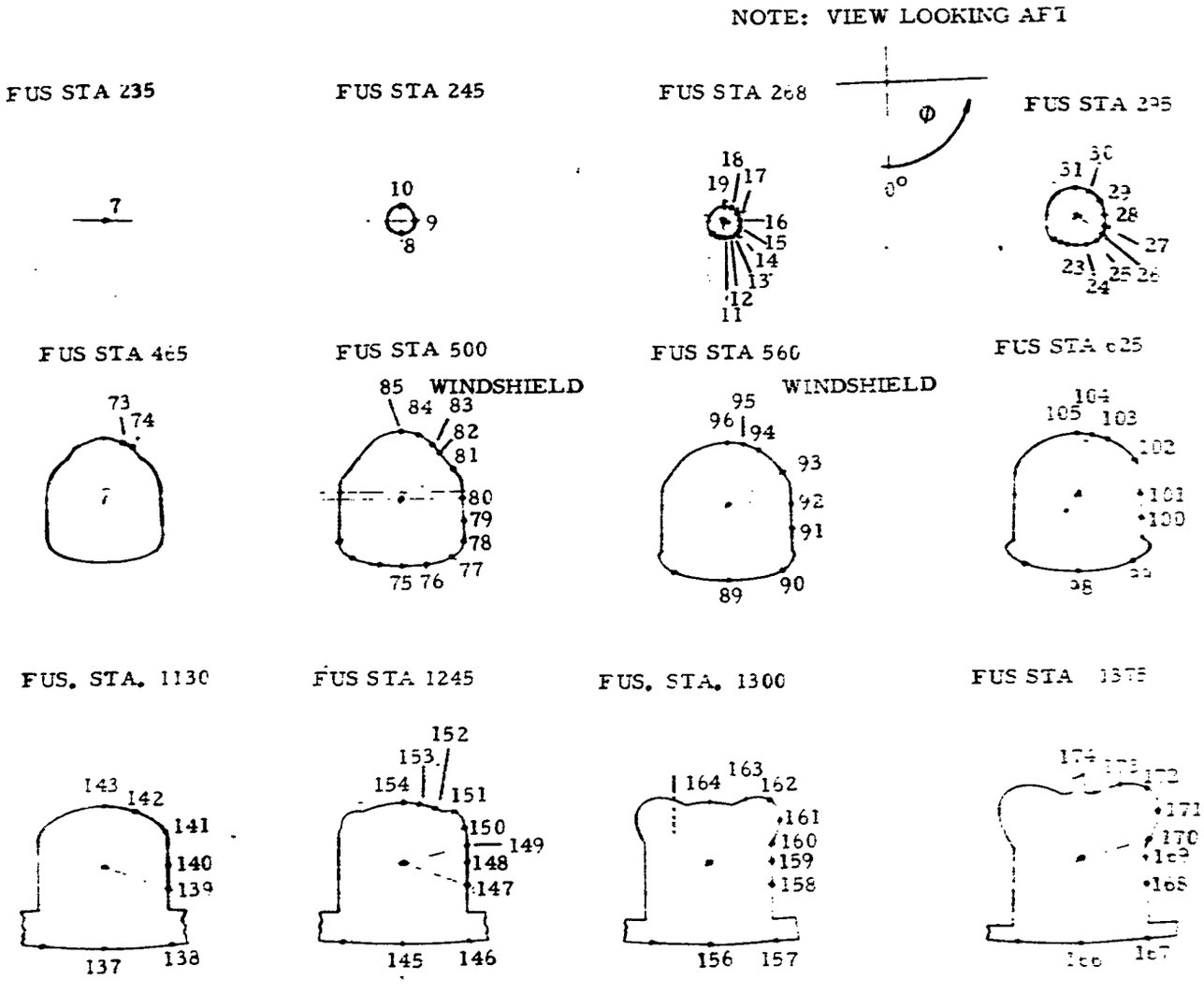

c. Fuselage, Vertical Tail, and Wing Pressure Tap Locations
Figure 2. - Continued.

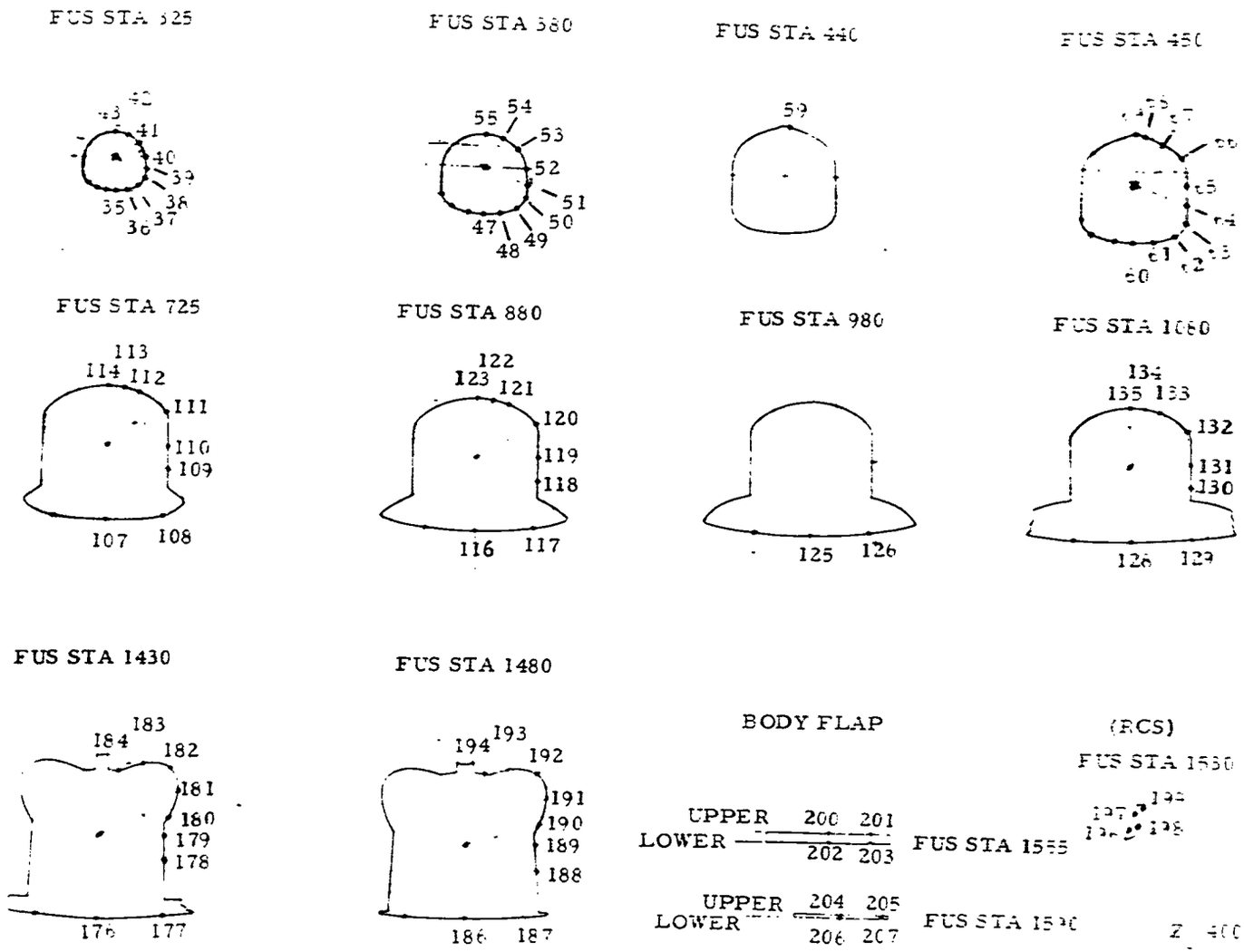

c. Fuselage, Vertical Tail, and Wing Pressure Tap Locations
Figure 2. - Continued.

PRESSURE ORIFICE LOCATION OF LEFT WING PANEL

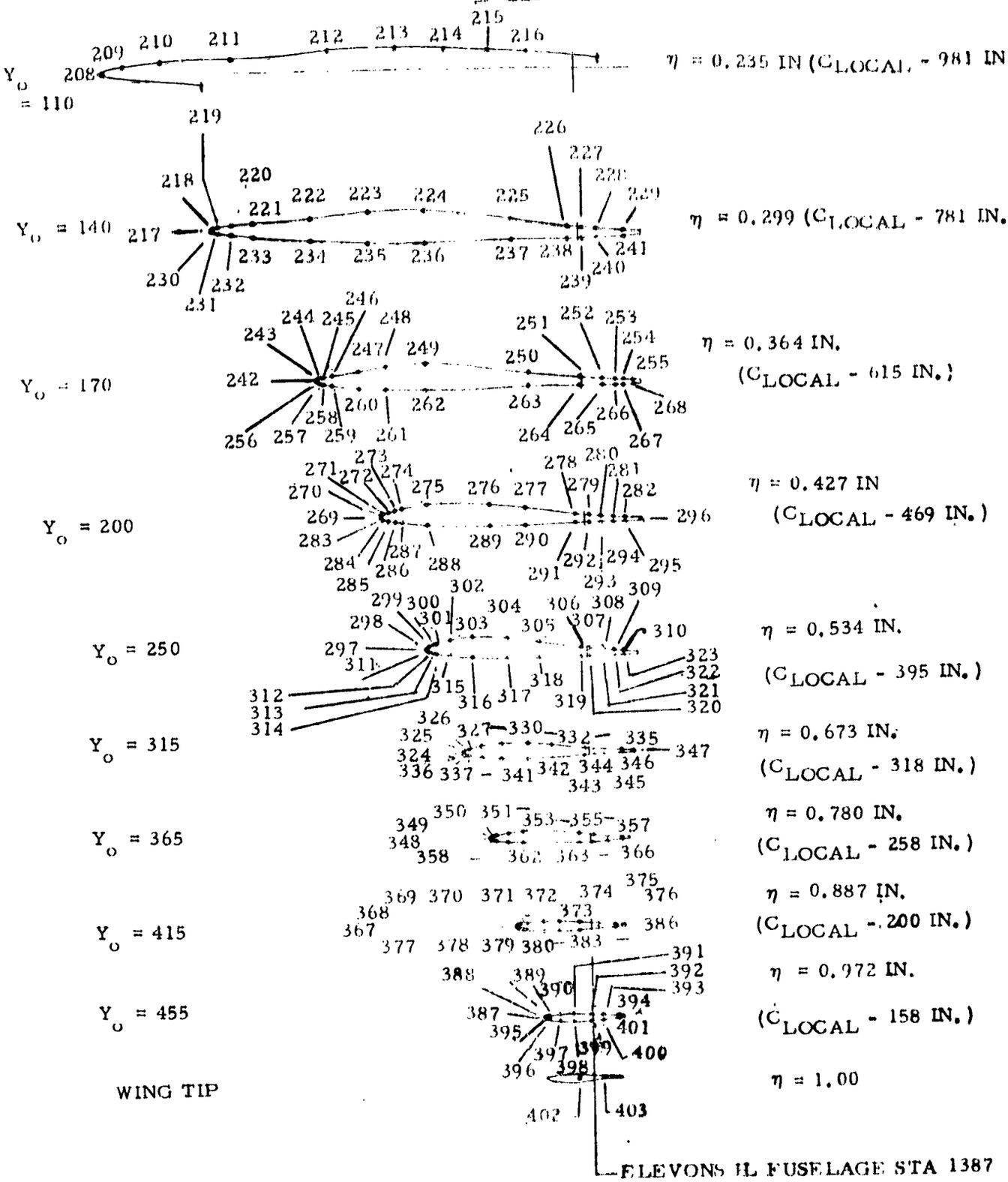

c. Fuselage, Vertical Tail, and Wing Pressure Tap Locations
Figure 2. - Continued.

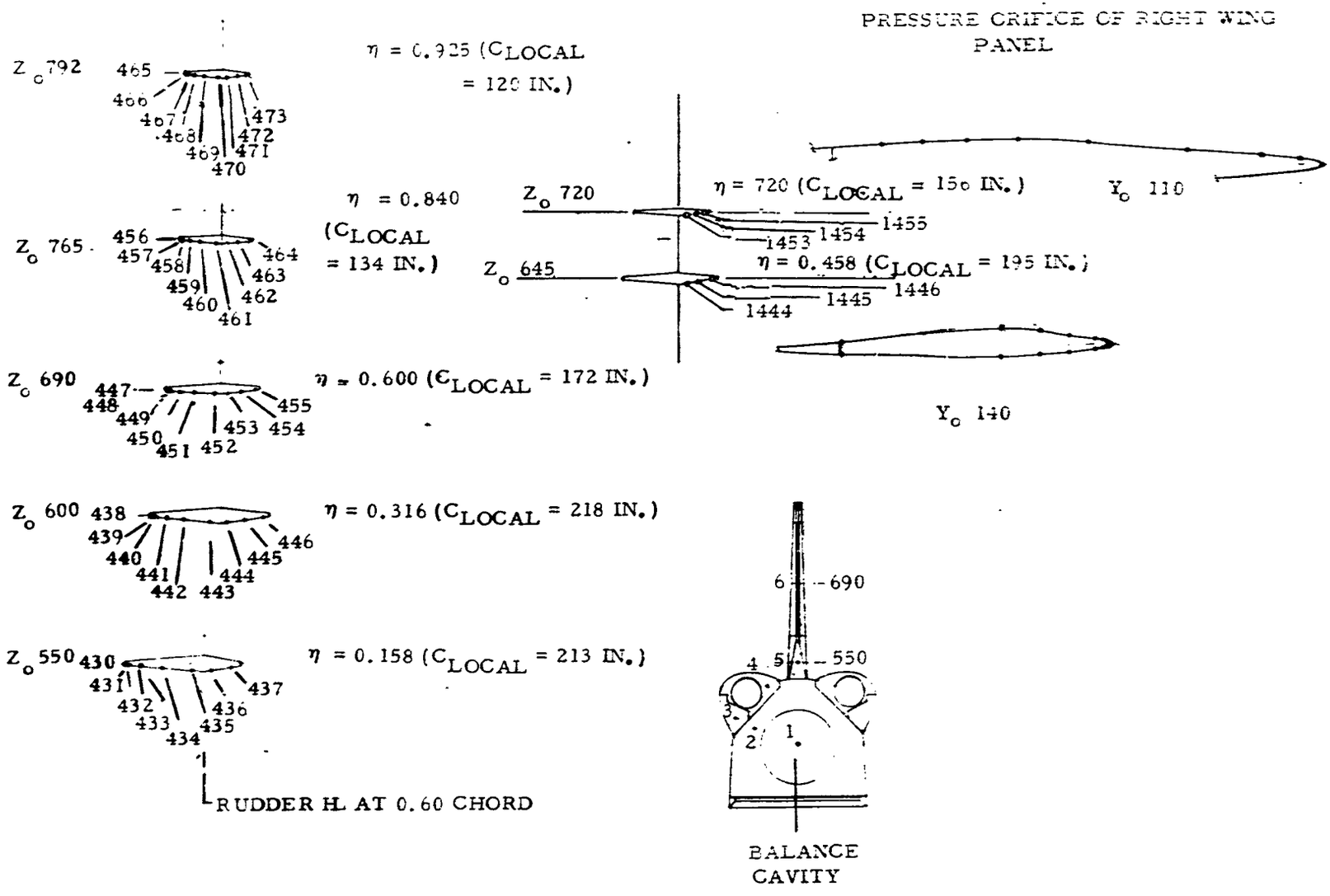

c. Fuselage, Vertical Tail, and Wing Pressure Tap Locations

Figure 2. - Concluded.

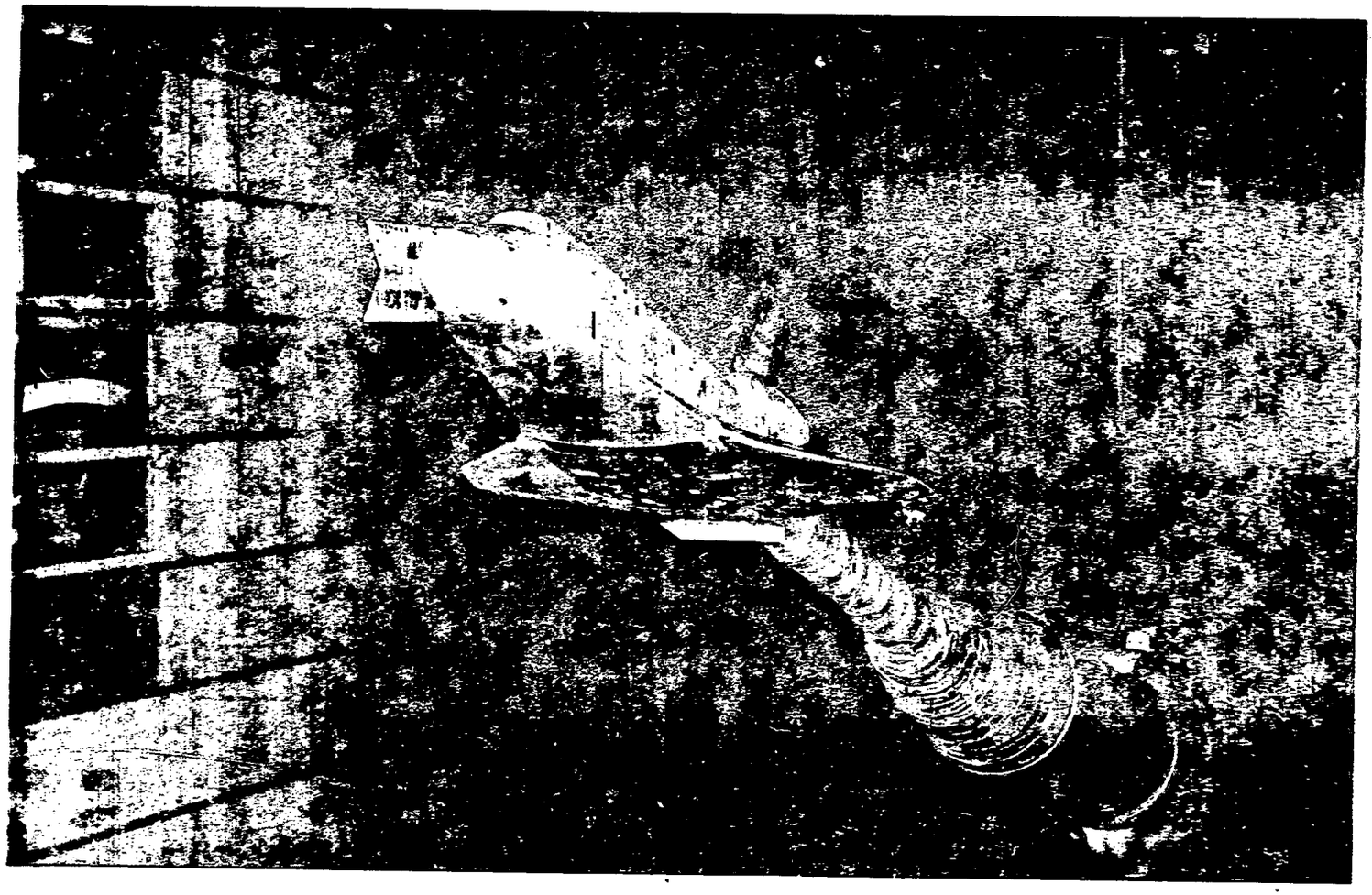

a. Three Quarter Front View of model 47-0 in the ARC 11 x 11 UPWT

Figure 3. - Model installation photographs.

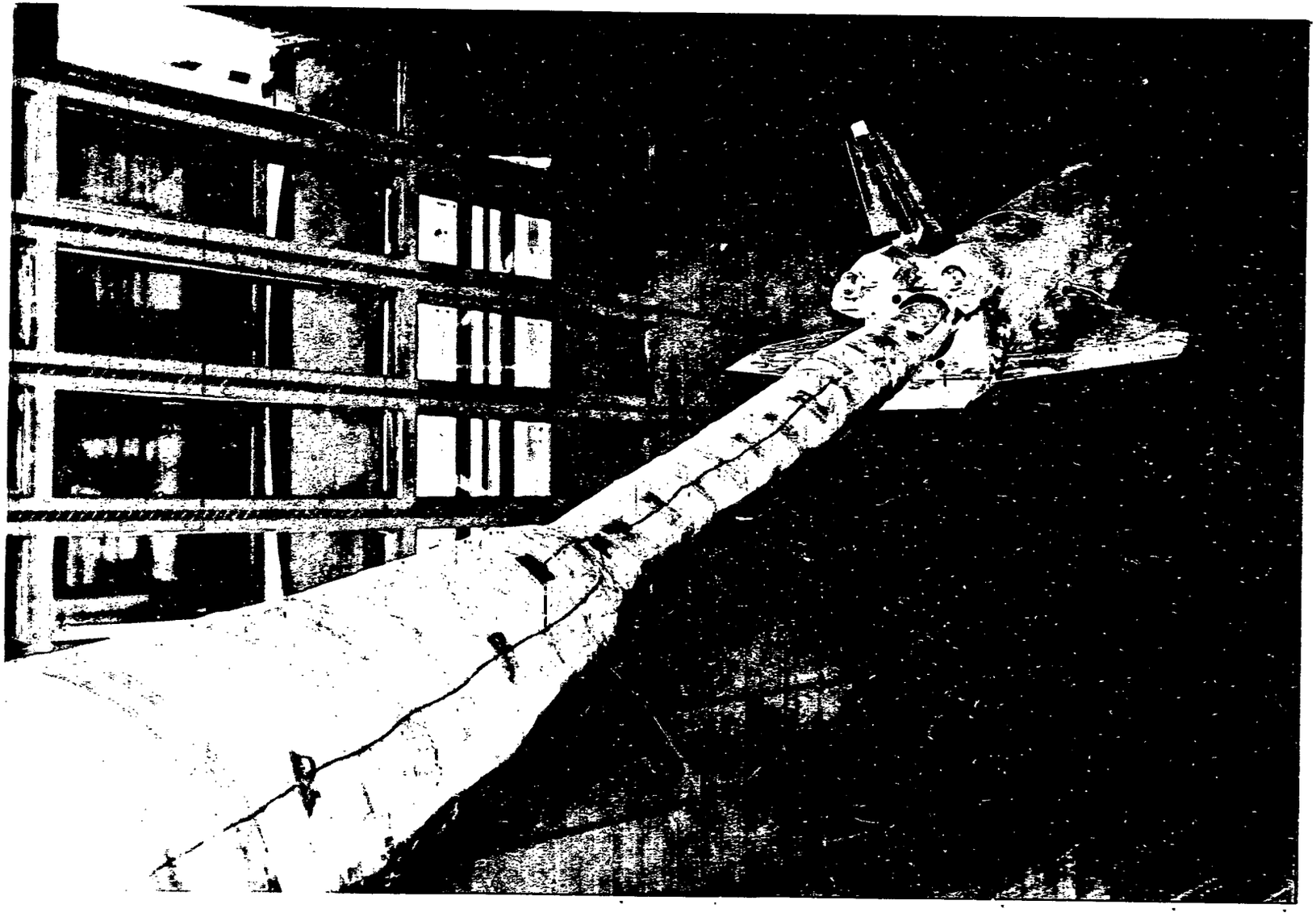

b. Three Quarter Rear View of Model 47-0 in the ARC 11 x 11 UPWT

Figure 3. - Concluded.

APPENDIX

VOLUME NO.	CONTENTS	PAGES
3	TABULATED FORCE DATA	1-723
	TABULATED PRESSURE DATA	
	COMPONENT	
4, 5	Orbiter fuselage	1-1270
6, 7, 8 (Note)	Lower wing	1271-3146
9, 10, 11 (Note)	Upper wing	3147-5404
12	Upper body flap	5405-5773
12	Lower body flap	5774-6142
13	Speed brake	6143-6546
13	Vertical tail	6547-7114

Note: Data tabulated at 2Y/BW = .673, X/CW = .775, .850, .950 & 1.00 were actually located at 2Y/BW = .641, X/CW = .775, .850, .950 & 1.00 as shown in Table V on page 47.

AMES 11-073(OA148) -140A/B/C/R CRB LEFT WING BOT (XEBL57) (05 AUG 75)

REFERENCE DATA

AREA = [illegible] SQ.FT. XMRP = 1076.0800 IN. XO
CHORD [illegible] IN. YMRP = [illegible] IN. YO
SPAN = [illegible] IN. ZMRP = 375.0000 IN. ZO
SCALE = .0300

PARAMETRIC DATA

RUDDER = 10.000 FELDRK = 55.000
BOFLAP = 15.300 L-ELVN = 4.000
R-ELVN = -4.000 MACH = 1.400

ALPHA (I) = -4.026 BETA (I) = -3.843 MACH = 1.3927 Q = 599.59 P = 441.59 P/L = 2.9055

SECTION 1 (LEFT WING BOT SURF DEPENDENT VARIABLE CP

Z/BEX	.2990	.3540	.4270	.5340	.6730	.7800	.8870	.9720
X/CX								
[illegible]	-.1709	-.2447	-.1343	-.2728	-.3551	.2199	-.1880	
[illegible]	.0100	-.2236	-.2462	-.4135	-.3955	-.4095	-.4024	-.4546
[illegible]		-.2300	-.3133					
[illegible]	-.1545			-.4449	-.4265	-.4432	-.4343	
[illegible]								-.4854
[illegible]				-.4421				
[illegible]			-.1886					
[illegible]		-.1219						
.034	-.1415							
[illegible]				-.4011	-.3882	-.3914	-.3948	
[illegible]								-.3122
.163		-.0332						
[illegible]			-.1761					
.229	-.1079							
[illegible]		-.1134						
.250				-.2121	-.3619	-.3566	-.3668	
.274			-.1617					
[illegible]								-.4135
[illegible]		-.1393						
[illegible]				-.1736	-.3069		-.3283	
[illegible]			-.1517					
[illegible]								-.3726
[illegible]				-.1360	-.1619			
[illegible]			-.3112					
[illegible]							-.3162	
[illegible]		-.0960						
[illegible]						-.3159		
.670								-.4158
.700					-.2069			
.725				-.1731				
.750						-.1800	-.2940	
.777			-.1829					
.775				-.1320	-.1552			
.799		-.1401						
.809			-.1277					
.834	-.1784							
.839		-.1559						
.850				-.2057	-.2106	-.2250		

AMES 11-073 OA148: 1-OA148 S.P OPB LEFT WING BOT (SELECT)

ALPHA = -4.033 BETA = -3.943

SECTION 1 LEFT WING BOT SURF DEPENDENT VARIABLE CP

2Y/B	.2930	.3640	.4270	.5340	.6730	.7800	.8870	.9720
X/C								
.047			-.1787					
.062								-.4144
.065	-.1266							
.079		-.1990						
.090	-.1569			-.2629			-.3704	
.095			-.2499					
.112		-.2363						
.140				-.3066	-.2343	-.3045		
.143			-.2885					
.171		-.2412						
.195	-.2039							
1.000			-.1088		-.1659		-.3801	

ALPHA (1) = -3.939 BETA (2) = .202 MACH = 1.3927 Q = 599.59 P = 441.59 RN/L = 2.9056

SECTION 1 LEFT WING BOT SURF DEPENDENT VARIABLE CP

2Y/B	.2930	.3640	.4270	.5340	.6730	.7800	.8870	.9720
X/C								
.010	-.0962	-.1135	-.0537	-.2718	-.3739	-.2571	-.2366	
.020	.0000	-.1139	-.1205	-.4069	-.4101	-.4340	-.4328	-.4963
.040		-.1130	-.1732					
.060	-.0995			-.4269	-.4359	-.4643	-.4605	
.069								-.5129
.080				-.3926				
.081			-.1493					
.086		-.0512						
.094	-.0946							
.150				-.3100	-.3936	-.4079	-.4205	
.157								-.3287
.162		.0189						
.172			-.1292					
.173	-.0716							
.174		-.0740						
.177				-.1659	-.3591	-.3573	-.3913	
.179			-.1243					
.180								-.4641
.210		-.0980						
.211				-.1383	- .832		-.3449	
.212			-.1129					
.213								-.3671
.214				-.1043	-.1340			
			- .3001					
.2[illegible]							-.3284	

AMES 11-073(OA148) -140A/B/C/R ORB LEFT WING BOT (XEBL57)

ALPHA (1) = -3.938 BETA (2) = .202

SECTION (1)LEFT WING BOT SURF DEPENDENT VARIABLE CP

Y/BW	.2330	.3540	.4270	.5340	.6730	.7800	.8970	.9720
X/CW								
.637		-.0747						
.650						-.1799		
.670								-.4205
.700					-.1715			
.725				-.1566				
.750						-.1327	-.2439	
.781			-.1730					
.798				-.1173	-.1262			
.798		-.1289						
.809			-.1122					
.834	-.1595							
.839		-.1376						
.851				-.1881	-.1845	-.1956		
.857			-.1645					
.863								-.4537
.875	-.1168							
.879		-.1903						
.900	-.1488			-.2456			-.2752	
.915			-.2355					
.918		-.2246						
.950				-.2908	-.2063	-.2815		
.953			-.2785					
.960		-.2361						
.970	-.2270							
1.000			-.1294		-.1902		-.2685	

ALPHA (2) = -4.001 BETA (3) = 4.282 MACH = 1.3927 Q = 599.59 P = 441.59 PN/L = 2.5755

SECTION (1)LEFT WING BOT SURF DEPENDENT VARIABLE CP

Y/BW	.2330	.3540	.4270	.5340	.6730	.7800	.8970	.9720
X/CW								
.019	-.0768	-.0340	.0357	-.2669	-.3938	-.2925	-.2747	
.020	.0000	-.0473	.0036	-.3909	-.4245	-.4528	-.4579	-.5220
.041		-.0409	-.0768					
.061	-.0781			-.3545	-.4434	-.4779	-.4832	
.083								-.5211
.102				-.3390				
.041			-.0964					
.083		-.0040						
.094	-.0854							
.101				-.1833	-.3832	-.4166	-.4366	
.121								-.3355
.163		.0499						

AMES 11-073(OA148) -140A/B/C/R ORB LEFT WING BOT (XES_57)

ALPHA (1) = -4.001 BETA (3) = 4.282

SECTION (1) LEFT WING BOT SURF DEPENDENT VARIABLE CP

Z/BW	.2990	.3640	.4270	.5340	.6730	.7800	.8870	.9720
X/CW								
.177			-.0962					
.229	-.0534							
.246		-.0456						
.250				-.1328	-.1823	-.3638	-.4041	
.274			-.0872					
.345								-.4098
.397		-.0615						
.400				-.1046	-.1260		-.3539	
.402			-.0827					
.503								-.3627
.550				-.0888	-.1002			
.565			-.2943					
.600								
.637		-.0594					-.1631	
.650								
.670						-.1520		
.700								-.3367
.725					-.1535			
.750				-.1413				
.760			-.1595			-.1177	-.1041	
.775				-.1023	-.1120			
.799		-.1221						
.808			-.1090					
.834	-.1711							
.839		-.1336						
.850				-.1740	-.1627	-.1859		
.857			-.1591					
.862								
.865	-.0984							-.3029
.879		-.1889						
.900	-.1483			-.2336			-.2336	
.905			-.2330					
.919		-.2198						
.950				-.2844	-.2022	-.2650		
.953			-.2720					
.955		-.2304						
.998	-.2312							
1.000			-.1911		-.2065		-.1119	

AMES 11-073(OA148) -140A/B/C/R ORB LEFT WING BOT (XE8L57)

ALPHA (2) = .015 BETA (1) = -3.863 MACH = 1.3931 Q = 599.59 P = 441.36 RN/L = 2.9062

SECTION (1)LEFT WING BOT SURF DEPENDENT VARIABLE CP

2Y/BW	.2990	.3640	.4270	.5340	.6730	.7800	.8870	.9720
X/CW								
.010	.0001	.0167	.2100	-.0828	-.1763	-.1059	-.0137	
.020	.0000	-.0154	.1509	-.2143	-.2258	-.2374	-.2530	-.2141
.040		-.0171	.0146					
.050	-.0253			-.2128	-.2322	-.2621	-.2731	
.069								-.2409
.090				-.1757				
.091			-.0351					
.096		.0267						
.094	-.0461							
.150				-.1221	-.1776	-.1938	-.2157	
.157								-.1883
.163		.1040						
.177			-.0388					
.229	-.0381							
.246		-.0124						
.250				-.0569	-.1290	-.1533	-.1819	
.274			-.0452					
.345								-.1480
.330		-.0341						
.400				-.0609	-.0454		-.1423	
.402			-.0448					
.503								-.1645
.500				-.0327	-.0449			
.555			-.3605					
.600							-.1030	
.637		-.0209						
.650						-.0865		
.670								-.1668
.700					-.1158			
.725				-.0980				
.750						-.0471	-.0493	
.760			-.1223					
.775				-.0625	-.0656			
.798		-.0944						
.809			-.0552					
.834	-.1266							
.839		-.0971						
.850				-.1356	-.1563	-.1417		
.857			-.1171					
.852								-.2198
.865	-.0542							
.879		-.1448						
.900	-.1150			-.2047			-.2188	
.905			-.1900					
.919		-.1994						

AMES 11-073(OA148) -140A/B/C/R ORB LEFT WING BOT (XEBLST)

ALPHA (2) = .015 BETA (1) = -3.863

SECTION (1)LEFT WING BOT SURF DEPENDENT VARIABLE CP

2Y/BW	.2930	.3640	.4270	.5340	.6730	.7800	.8870	.9720
X/CW								
.950								
.953				-.2610	-.2340	-.2519		
.955			-.2373					
.965		-.2058						
.985	-.1499							
1.000			-.1214		-.1162		-.3529	

ALPHA (2) = .021 BETA (2) = .195 MACH = 1.3931 Q = 599.59 P = 441.36 RN/L = 2.9062

SECTION (1)LEFT WING BOT SURF DEPENDENT VARIABLE CP

2Y/BW	.2930	.3640	.4270	.5340	.6730	.7800	.8870	.9720
X/CW								
.010	-.0095	.0011	.2429	-.0791	-.1955	-.1394	-.0633	
.020	.0000	-.0009	.2195	-.1850	-.2298	-.2540	-.2828	-.2447
.040		.0047	.0695					
.050	-.0217							
.062				-.1069	-.1860	-.2640	-.2970	
.080								-.2558
.081				-.1067				
.086			.0104					
.094		.0449						
.150	-.0402							
.157				-.0753	-.1341	-.1770	-.2146	
.163								-.1824
.177		.1187						
.229	-.0398		-.0145					
.246								
.250		.0130						
.274				-.0364	-.0542	-.1119	-.1836	
.345			-.0147					
.500		-.0074						-.1245
.500								
.402				-.0345	-.0355		-.0631	
.503			-.0254					
.601								
.670				-.0166	-.0277			-.0883
.700			-.3633					
.750								
.800		-.0022					-.0773	
.850								
.900					-.0728			
.950								-.1301
.970				-.1005				
1.000			-.0871					
1.050						-.0459	-.0461	
1.100			-.1119					

AMES 11-073(OA148) -148A/B/C/R ORB LEFT WING BOT (XEBL57)

ALPHA (2) = .021 BETA (2) = .195

SECTION (1)LEFT WING BOT SURF DEPENDENT VARIABLE CP

2Y/BW	.2990	.3640	.4270	.5340	.6730	.7800	.8870	.9720
X/CW								
.775				-.0438	-.0488			
.798		-.0770						
.808			-.0344					
.834	-.1129							
.839		-.0785						
.850				-.1224	-.1512	-.1342		
.857			-.1079					
.862								
.865	-.0523							-.2442
.879		-.1381						
.900	-.1044							
.906			-.1760	-.1872			-.2087	
.919		-.1981						
.950								
.953			-.2316	-.2473	-.2239	-.2434		
.955		-.1955						
.965	-.1566							
1.000			-.1585		-.1313		-.2826	

ALPHA (2) = .016 BETA (3) = 4.262 MACH = 1.3931 Q = 599.59 P = 441.36 RN/L = 2.5082

SECTION (1)LEFT WING BOT SURF DEPENDENT VARIABLE CP

2Y/BW	.2990	.3640	.4270	.5340	.6730	.7800	.8870	.9720
X/CW								
.010	-.0750	-.0065	.2664	-.0226	-.1739	-.1592	-.0924	
.020	.0000	-.0363	.2472	-.0155	-.1159	-.2456	-.2941	-.1929
.040		-.0194	.1143					
.050	-.0544			-.0780	-.1857	-.2293	-.2875	
.069								-.1849
.080				-.0604				
.141			.0426					
.144		.0438						
.154	-.0530							
.160				-.0416	-.0781	-.1317	-.2017	
.167								
.183		.1197						-.1680
.177			.0064					
.219	-.0476							
.240		.0282						
.250				-.0153	-.0421	-.0382	-.0698	
.274			.0111					
.345								
.390		.0137						-.0652

AMES 11-0731(OA148) -140A/B/C/R CRB LEFT WING BOT XEBLST

ALPHA (3) = .016 BETA (3) = +.262

SECTION (1)LEFT WING BOT SURF DEPENDENT VARIABLE CP

Z/BW	.0300	.3040	.4270	.5340	.6730	.7800	.8870	.9730
X/CW								
.400				-.0082	-.0125		-.0523	
.402			-.0026					
.500								-.0940
.550				-.0069	-.0057			
.555			-.3442					
.600							-.0629	
.647		.0076						
.650						-.0564		
.670								-.1304
.700					-.0864			
.725				-.0782				
.750						-.0406	-.0335	
.760			-.1034					
.775				-.0287	-.0334			
.798		-.0775						
.809			-.0291					
.834	-.1082							
.839		-.0735						
.850				-.1080	-.1409	-.1308		
.857			-.0996					
.882								-.2417
.885	-.0511							
.899		-.1400						
.900	-.1001			-.1738			-.2036	
.905			-.1739					
.919		-.1770						
.940				-.2391	-.2037	-.2347		
.943			-.2249					
.945		-.1867						
.985	-.1657							
1.000			-.1705		-.1620		-.1799	

ALPHA (3) = 3.200 BETA (1) = -3.867 MACH = .3926 Q = 599.48 P = 441.59 RN/L = 2.9063

SECTION (1)LEFT WING BOT SURF DEPENDENT VARIABLE CP

Z/BW	.0300	.3040	.4270	.5340	.6730	.7800	.8870	.9720
X/CW								
.010	.0562	.0188	.3977	.2517	.1772	.1764	.2118	
.020	.0300	.0350	.3725	.1768	.1693	.0683	.0372	.0919
.040		.0516	.2095					
.050	.0443			.0552	.0230	.0272	.0306	
.069								
.100								.0583
.140				.0519				

AMES 11-073(OA148) -140A/B/C/R ORB LEFT WING BOT (XE&L57)

ALPHA (3) = 3.900 BETA (1) = -3.867

SECTION (1)LEFT WING BOT SURF DEPENDENT VARIABLE CP

2Y/BW	.2990	.3540	.4270	.5340	.6730	.7800	.8870	.9720
X/CW								
.081			.1284					
.086		.1084						
.094	.0282							
.150				.0491	.0629	.0691	.0822	
.157								-.0665
.163		.2014						
.177			.0863					
.229	.0245							
.246		.0814						
.310				.0772	.0738	.0890	.0697	
.274			.0731					
.345								.0358
.340		.0731						
.470				.0682	.0802		.0607	
.4[illegible]			.0645					
[illegible]								-.0005
.5[illegible]				.0725	.0852			
.5[illegible]			-.4048					
.6[illegible]							.0081	
.6[illegible]		.0544						
.6[illegible]						.0272		
.670								-.0576
.7[illegible]					-.0188			
.705				-.0192				
.7[illegible]						.0545	.0429	
.762			-.0537					
.7[illegible]				.0069	.0366			
.798		-.0306						
.808			.0312					
.834	-.0639							
.838		-.0345						
.850				-.0537	-.0861	-.0600		
.857			-.0519					
.868								-.1658
.866	.0131							
.870		-.0832						
.910	-.0599			-.1374			-.1385	
.905			-.1208					
.918		-.1448						
.920				-.2016	-.1868	-.1988		
.913			-.1794					
.950		-.1658						
.958	-.0873							
1.000			-.1345		-.1750		-.3306	

AMES 11-073(OA148) -140A/B/C/R ORB LEFT WING BOT (XEBLE7)

ALPHA BT = -.005 BETA (B) = .197 MACH = 1.3926 Q = 599.49 P = 441.59 RN/L = 2.9063

SECTION 1 LEFT WING BOT SURF DEPENDENT VARIABLE CP

Y/CW	.2930	.3540	.4270	.5340	.6730	.7800	.8870	.9720
.010	-.0325	-.1494	.3443	.3054	.2090	.1926	.2090	
.020	.0000	-.0578	.3489	.2270	.1793	.1169	.0600	.0628
.040		-.0287	.2287					
.050	.0116							
.069				.1097	.0639	.0938	.0557	
.090								.0401
.091				.0985				
.095			.1483					
.094		.0645						
.150	.0066							
.157				.0783	.0842	.0952	.1099	
.163								-.0718
.177		.1809						
.229	.0073		.0979					
.246								
.250		.0891						
.274				.0910	.0880	.0957	.0746	
.345			.0941					
.390								
.400		.0841						.0129
.402				.0796	.0948		.0661	
.503			.0761					
.550								
.585				.0799	.0918			-.0184
.600			-.4174					
.637								
.650		.0751					.0145	
.670								
.700						.0332		
.705								-.0658
.750					-.0159			
.750				-.0106				
.775								
.750			-.0395			.0325	.0422	
.775								
.798				.0410	.0439			
.808		-.0088						
.814			.0520					
.817	-.0448							
.827		-.0104						
.840								
.842				-.0478	-.0890	-.0892		
.855			-.0376					
.875	.0182							-.1923
.879		-.0782						
.900	-.0512							
.904				-.1174				
.907			-.1083				-.1431	
.919		-.1349						

AMES 11-073(OA148) -140A/B/C/R ORB LEFT WING BOT (XEBL57)

ALPHA (3) = 4.005 BETA (2) = .197

SECTION (1)LEFT WING BOT SURF DEPENDENT VARIABLE CP

2Y/BW	.2990	.3640	.4270	.5340	.6730	.7800	.8870	.9720
X/CW								
.950				-.1932	-.1747	-.1935		
.953			-.1759					
.955		-.1526						
.965	-.1078							
1.000			-.1745		-.1121		-.3160	

ALPHA (3) = 3.907 BETA (3) = 4.252 MACH = 1.3926 Q = 599.48 P = 441.59 RN/L = 2.9863

SECTION (1)LEFT WING BOT SURF DEPENDENT VARIABLE CP

2Y/BW	.2990	.3640	.4270	.5340	.6730	.7800	.8870	.9720
X/CW								
.010	-.1600	-.3739	.2658	.3363	.2329	.2148	.2317	
.020	.0000	-.1884	.2934	.2653	.2030	.1497	.1173	.0022
.040		-.1432	.2272					
.060	-.0587			.1548	.1002	.1107	.1059	
.080								.0008
.100				.1353				
.120			.1509					
.140		-.0111						
.160	-.0356							
.180				.0890	.1107	.1154	.1201	
.197		.1425						-.0911
.220			.1014					
.240	-.0203							
.260		.0862						
.280				.1007	.0965	.1026	.0775	
.300			.1055					
.320								
.340		.0973						-.0049
.360								
.380				.0924	.1171		.0799	
.400			.0870					
.420								
.440				.0828	.0941			-.0302
.460			-.3945					
.480								
.500		.0814					.0204	
.520								
.540						.0335		
.560								-.0843
.580					-.0105			
.600				-.0022				
.620								
.640						.0159	.0415	
.660			-.0365					

```
DATE [illegible]                    TABULATED PRESSURE DATA - OA148 ( AMES 11-073-1 )                                              PAGE [illegible]

                                          AMES 11-073(OA148) -140A/B/C/R OPB LEFT WING BOT                      (XEEL57)
ALPHA ( 3) =     3.907    BETA  ( 3) =     4.252
 SECTION ( 1)LEFT WING BOT SURF                        DEPENDENT VARIABLE CP
2Y/BW        .2990   .3540   .4270   .5340   .6730   .7800   .8870   .9720
  X/CW
   .775
   .799                                .0650   .0553
   .809             -.0138
   .834    -.0428            .0516
   .839             -.0032
   .850
   .857                               -.0323  -.0837  -.0778
   .862                      -.0303
   .865     .0117                                                     -.2154
   .879             -.0331
   .900    -.0404
   .905                               -.1100                   .1522
   .919                      -.1149
   .950             -.1242
   .953                               -.1841  -.1673  -.1804
   .955                      -.1712
   .955    -.1213   -.1459
  1.000                      -.2095           -.1003           -.2702
ALPHA ( 4) =    7.945    BETA  ( 1) =    -3.862   MACH   =  1.3931      Q      =  599.59     P      =  441.76      RN/L    =  2.8959
 SECTION ( 1)LEFT WING BOT SURF                      DEPENDENT VARIABLE CP
2Y/BW        .2990   .3540   .4270   .5340   .6730   .7800   .8870   .9720
  X/CW
   .010     .0088   -.1274   .4292   .5163   .4617   .5176   .5399
   .020     .0000    .0052   .4582   .3871   .4055   .4126   .4031   .1393
   .040              .0430   .3500
   [illegible] .0876
   [illegible]                         .2818   .2752   .3147   .2562
   [illegible]                                                         .1559
   [illegible]                         .2449
   [illegible]                 .2569
   [illegible]      .1545
   [illegible] .0820
   [illegible]                         .1978   .2545   .2349   .2960
   [illegible]                                                        -.0266
   [illegible]      .2856
   [illegible]                 .2001
   [illegible] .0363
   [illegible]      .1774
   [illegible]                         .2076   .2258   .2521   .2230
   [illegible]                 .1959
   .845
   [illegible]      .1803                                              .1311
```

AMES 11-073(OA148) -140A/B/C/R ORB LEFT WING BOT (XEBL57)

ALPHA (1) = 7.345 BETA (1) -3.862

SECTION 1 LEFT WING BOT SURF DEPENDENT VARIABLE CP

2Y/BW	.2930	.3540	.4270	.5340	.6730	.7800	.8870	.9720
X CW								
.400				.1939	.2500		.2054	
.402			.1774					
.503								.0969
.550				.1829	.1990			
.555			-.4320					
.601							.1268	
.607		.1604						
.651						.1267		
.700								.0273
.703					.0669			
.728				.0623				
.750						.1274	.1279	
.772			.0223					
.775				.1215	.1208			
.797		.0493						
.803			.1289					
.854	.0115							
.857		.0501						
.901				0163	-.0210	-.0011		
.904			.0304					
.941								-.1198
.948	.0899							
.951		-.0104						
.957	-.0341			-.0638			-.0825	
.960			-.0487					
.979		-.0829						
.981				-.1397	-.1273	-.1507		
.983			-.1245					
.985		-.1158						
.988	-.0459							
.990			-.1536		-.2653		-.4196	

ALPHA (2) = 7.917 BETA (2) = .187 MACH = 1.3931 Q = 599.59 P = 441.36 RN/L = 2.8969

SECTION 1 LEFT WING BOT SURF DEPENDENT VARIABLE CP

2Y/BW	.2930	.3540	.4270	.5340	.6730	.7800	.8870	.9720
X CW								
.400	-.1294	-.3372	.2844	.5233	.4643	.5323	.5269	
.402	.0000	-.1210	.3603	.4169	.4184	.4381	.4160	.0234
.503		-.0109	.3246					
.550	.0220			.3133	.2929	.3300	.3689	
.603								.0651
.607				.2675				

TABULATED PRESSURE DATA - OA148 (AMES 11-073-1)

AMES 11-073(OA148) -140A/B/C/R OPB LEFT WING BOT (XEBL57)

ALPHA = 7.917 BETA (2) = .187

SECTION ( ) LEFT WING BOT SURF DEPENDENT VARIABLE CP

Y/CW	.2930	.3540	.4270	.5340	.6730	.7800	.8970	.9720
X/CW								
.081			.2442					
.086		.0725						
.094	.0331							
.150				.2050	.2661	.2817	.2931	
.164								
.163		.2390						-.0481
.174			.1957					
.229	.0580							
.246		.1607						
.250				.2063	.2338	.2486	.2218	
.274			.1993					
.345								
.390		.1765						.0964
.400								
.402				.1961	.2429		.2149	
.402			1799					
.503								
.550								.0501
.555				.1806	.1974			
.560			-.4495					
.607								
.607		.1628					.1053	
.610								
.670						.1197		
.700								-.0129
.700					.0661			
.795				.0717				
.790								
.790						.1088	.1110	
.790			.0375					
.795								
.798				.1463	.1244			
.798		.0417						
.799								
.799			.1380					
.799	.0223							
.818		.0541						
.852								
.852				.0338	-.0292	-.0175		
.852			.0413					
[illegible]								
[illegible]	.1010							-.1602
[illegible]		-.0162						
[illegible]	[illegible]							
[illegible]				-.0948			-.0910	
[illegible]			[illegible]					
[illegible]								
[illegible]				-.1344	-.1254	-.1428		
[illegible]			-.1167					
[illegible]		-.0334						
[illegible]	-.0591							
[illegible]								
[illegible]			-.2042		-.2195		-.4433	

AMES 11-073(OA148) -140A/S/C/R ORB LEFT WING BOT (XEBL57)

ALPHA [illegible] = 7.649 BETA (3/ = 4.251 MACH = 1.3931 Q = 599.59 P = 441.36 RN/L = 2.8959

[illegible] LEFT WING BOT SURF DEPENDENT VARIABLE CP

Y/SW	.2040	.3540	.4270	.5340	.6730	.7800	.8870	.9720
X/CW								
.010	-.2621	-.4259	.1033	.4849	.4533	.5070	.5009	
.020	.0000	-.2183	.2161	.4175	.4121	.4318	.4223	-.0971
.040		-.1632	.2522					
.067	-.0538			.3190	.3073	.3267	.3688	
.069								-.0207
.087				.2611				
.091			.1976					
.095		.0043						
.094	-.0114							
.152				.2044	.2621	.2756	.2860	
.157								-.0720
.163		.1771						
.172			.1737					
.189	.0229							
.246		.1352						
.250				.1987	.2263	.2469	.2277	
.274			.1863					
.245								.0527
.337		.1534						
.341				.1933	.2391		.2197	
.342			.1737					
.347								.0126
.354				.1757	.1942			
.371			-.0199					
.401							.0970	
.407		.1875						
.417						.1269		
.421								-.0319
.443					.0725			
.454				.0791				
.471						.1058	.1065	
.471			.0354					
.491				.1622	.1350			
.494		.0432						
.498			.1340					
.504	.0224							
.542		.0669						
.547				.0481	-.0298	-.0172		
.547			.0454					
.552								-.1835
.555	.0267							
.579		-.0221						
.600	.0271			-.0480			-.0938	
.605			-.0534					
.619		-.0632						

AMES 11-0731(OA148) -140A(B)(C/R CPB LEFT WING BOT (REBLST)

ALPHA (S) = [illegible] 348 BETA (I) = -.251

SECTION (1)LEFT WING BOT SURF DEPENDENT VARIABLE CP

Z/SW	.2930	.3540	.4270	.5340	.6730	.7800	.8870	.9720
X/CW								
.950				-.1228	-.1031	-.1178		
.953			-.1047					
.956		-.0973						
.959	-.0622							
1.000			-.1659		-.1405		-.3943	

ALPHA (S) = 11.907 BETA (I) = -3.847 MACH = 1.3946 Q = 600.23 P = 440.68 PN/L = 2.9052

SECTION (1)LEFT WING BOT SURF DEPENDENT VARIABLE CP

Z/SW	.2930	.3540	.4270	.5340	.6730	.7800	.8870	.9720
X/CW								
.010	-.1081	-.2772	.3709	.6923	.6603	.7265	.7270	
.020	.0000	-.0335	.4783	.5781	.6035	.6309	.6415	.0743
.040		.0244	.4551					
.060	.1025			.4732	.4912	.5204	.5563	
.069								.1529
.080				.4071				
.081			.3789					
.084		.1859						
.094	.1282							
.150				.3508	.4168	.4459	.4444	
.167								-.0010
.183		.3654						
[illegible]			.3207					
.233	.1555							
.245		.2715						
.250				.3416	.3775	.4039	.3810	
.274			.3183					
.245								.1905
.320		.2921						
[illegible]				.3217	.3829		.3530	
[illegible]			.3030					
[illegible]								.1567
[illegible]				.2879	.3083			
[illegible]			-.4405					
[illegible]							.2074	
[illegible]		.2561						
[illegible]						.2293		
[illegible]								.0998
[illegible]					.1557			
[illegible]				.1591				
						.2278	.2114	
			.1723					

AMES 11-073(0A148) -140A/B/C/R ORB LEFT WING BOT (XEBL57)

ALPHA (5) = 11.907 BETA (1) = -3.847

SECTION (1)LEFT WING BOT SURF DEPENDENT VARIABLE CP

Z/BW	.2930	.3640	.4270	.5340	.6730	.7800	.8870	.9720
X/CW								
.775				.2502	.2126			
.799		.1197						
.828			.2251					
.834	.0995							
.833		.1431						
.850				.1124	.0607	.0699		
.857			.1303					
.862								-.0776
.865	.1972							
.879		.0605						
.907	.0893			.0117			-.0121	
.915			.0307					
.919		.0056						
.921				-.0699	-.0563	-.0802		
.943			-.0627					
.955		-.0317						
.960	.0062							
1.000			-.2035		-.3167		-.4895	

ALPHA (5) = 11.907 BETA (2) = .95 MACH = 1.3946 Q = 600.23 P = 440.33 RN/L = 3.3052

SECTION (1)LEFT WING BOT SURF DEPENDENT VARIABLE CP

Z/BW	.2930	.3640	.4270	.5340	.6730	.7800	.8870	.9720
X/CW								
.775	-.0475	-.3742	.3777	.6211	.5634	.6665	.6638	
.799	.0000	-.3148	.3289	.5431	.5745	.6001	.6112	-.0705
.828		-.0760	.3774					
.834	.0260			.4544	.4750	.4979	.5390	
.833								.0495
.850				.3878				
.857			.3709					
.862		.1094						
.865	.0734							
.879				.3439	.4029	.4259	.4368	
.907								-.0393
.915		.3010						
.919			.2951					
.921	.1189							
.943		.2415						
.955				.3245	.3589	.3933	.3663	
.960			.3025					
.965								.1332
.990		.2757						

:
.
:
:

AMES 11-073(OA148) -140A/B/C/R ORB LEFT WING BOT (XE6L57)

ALPHA (2) = 11.890 BETA (2) = .186

SECTION (1)LEFT WING BOT SURF DEPENDENT VARIABLE CP

X/CW \ 2Y/BW	.2930	.3640	.4270	.5340	.6730	.7800	.8870	.9720
.400				.3160	.3682		.3320	
.402			.2871					
.503								
.550				.2806	.3005			.1021
.565			-.4514					
.600								
.637		.2606					.1876	
.650								
.670						.2165		
.700								.0711
.725					.1467			
.750				.1623				
.760			.1169			.1987	.1935	
.775								
.792				.2600	.2113			
.808		.1264						
.834			.2351					
.839	.1074							
.850		.1643						
.857				.1350	.0532	.0586		
.882			.1419					
.865								-.1141
.873	.1878							
.900		.0590						
.905	.1074			.0219			-.0196	
.919			.0247					
.950		.0146						
.953				-.0657	-.0457	-.0564		
.955			-.0453					
.955		-.0234						
1.000	.0084							
			-.1750		-.2768		-.4997	

ALPHA (5) = 11.884 BETA (3) = 4.265 MACH = 1.3946 Q = 600.23 P = 440.88 RN/L = 2.9052

SECTION (1)LEFT WING BOT SURF DEPENDENT VARIABLE CP

X/CW \ 2Y/BW	.2930	.3640	.4270	.5340	.6730	.7800	.8870	.9720
.010	-.3442	-.4325	.0017	.5290	.5450	.5799	.5760	
.020	.1000	-.2898	.1603	.4939	.5319	.5543	.5619	-.1968
.040		-.1870	.2911					
[illegible]	-.0[illegible]							
[illegible]				.4192	.4408	.4622	.5021	
.080								-.0508
				.3623				

DATE 10 FEB 76

TABULATED PRESSURE DATA - OA148 (AMES 11-073-1)

AMES 11-073(OA148) -140A/B/C/R ORB LEFT WING BOT (XE8L57)

ALPHA (5) = 11.894 BETA (3) = 4.265

SECTION (1)LEFT WING BOT SURF DEPENDENT VARIABLE CP

2Y/BW	.2990	.3640	.4270	.5340	.6730	.7800	.8870	.9720
X/CW								
.081								
.085			.2566					
.094		.0282						
.150	.0208							
.157				.3185	.3768	.4050	.4249	
.163								-.0754
.177		.2330						
.229			.2514					
.246	.0763							
.250		.2009						
.274				.3027	.3395	.3747	.3582	
.348			.2826					
.390								
.400		.2434						.0937
.402				.3068	.3553			
.503			.2793				.3177	
.550								
.565				.2727	.2921			.0703
.610			-.4448					
.611								
.651		.2583					.1793	
.671								
.700						.2079		
.795								
.799					.1480			.0464
.799				.1537				
.799								
.799			.1118			.1824	.1757	
.799								
.799		.1181		.2574	.2086			
.799								
.844	.0957		.2226					
.849								
.849		.1571						
.850								
.857				.1346	.0350	.0451		
.862			.1338					
.865	.1631							-.1366
.879								
.879		.0617						
.900	.1179							
.905				.0244				
.919			.0239				-.0285	
.919								
.919		.0225						
.950								
.953				-.0617	-.0381	-.0422		
.955			-.0259					
.955		-.0100						
.955	.0123							
1.000								
			-.2166		-.1498		-.4760	

AMES 11-073(OA148) -140A/B/C/R ORB LEFT WING BOT (XEBL57)

ALPHA (1) = 15.671 BETA (1) = -3.822 MACH = 1.3954 Q = 598.94 P = 438.77 RN/L = 2.9066

SECTION (1)LEFT WING BOT SURF DEPENDENT VARIABLE CP

ZY BY	.2930	.3640	.4270	.5340	.6730	.7800	.8870	.9720
X/CW								
.010	-.1997	-.3132	.2931	.7624	.7779	.8059	.7979	
.020	.0000	-.0414	.4598	.7023	.7452	.7713	.7770	-.0197
.040		.0296	.5226					
.050	.1217			.6124	.6511	.6826	.7139	
.062								
.080				.5488				.1342
.081			.4658					
.094		.2327						
.104	.1758							
.110				.4992	.5570	.6075	.5831	
.157								
.163		.4476						.0004
.177			.4369					
.179	.2267							
.244		.3664						
.250				.4652	.5216	.5629	.5098	
.274			.4414					
.345								
.390		.4152						.2492
.400				.4597	.5155		.4659	
.402			.4177					
.503								
.550				.4118	.4185			.2125
.565			-.4532					
.600							.3046	
.637		.3750						
.650						.3285		
.670								.1782
.700					.2441			
.725				.2607				
.750						.3105	.2856	
.760			.2054					
.775				.3831	.2987			
.799		.2276						
.819			.3305					
.814	.2016							
.879		.2491						
.900				.2097	.1393	.1440		
.910			.2312					
.942								
[illegible]	.0993							-.0355
[illegible]		.1444						
[illegible]	.1729			.0787			.0548	
.995			.0993					
[illegible]		.0808						

AMES 11-073(OA148) -140A/B/C/R ORB LEFT WING BOT (XEBL57)

ALPHA (6) = 15.871 BETA (1) = -3.822

SECTION (1)LEFT WING BOT SURF DEPENDENT VARIABLE CP

2Y/Bw	.2990	.3640	.4270	.5340	.6730	.7800	.8870	.9720
X/Cw								
.950				.0066	.0271	.0060		
.953			.0002					
.955		.0274						
.965	.0385							
1.000			-.1997		-.3684		-.5545	

ALPHA (6) = 15.893 BETA (2) = .187 MACH = 1.3964 Q = 598.94 P = 438.77 RN/L = 2.9066

SECTION (1)LEFT WING BOT SURF DEPENDENT VARIABLE CP

2Y/Bw	.2990	.3640	.4270	.5340	.6730	.7800	.8870	.9720
X/Cw								
.010	-.3004	-.3904	.1000	.6616	.6910	.6929	.6820	
.020	.0000	-.601	.2981	.6374	.6775	.7003	.6958	-.1468
.040		-.0784	.4887					
.050	.0489			.5734	.6182	.6317	.6564	
.060								.0275
.080				.5193				
.100			.3901					
[illegible]		.4401						
[illegible]	.23							
[illegible]				.4676	.5349	.5727	.5454	
[illegible]		.3730						-.0469
[illegible]			.3970					
[illegible]	.774							
[illegible]		.3271						
[illegible]				.4427	.4907	.5322	.4805	
[illegible]			.4178					
[illegible]		.3832						.1837
[illegible]				.4398	.4924		.4297	
[illegible]			.4117					
[illegible]								.1686
[illegible]				.4096	.4051			
[illegible]			-.4872					
[illegible]		.3725					.2801	
[illegible]						.3059		
[illegible]								.1378
.755					.2507			
.750				.2580				
.760			.2096			.2952	.2673	

AMES 11-073(OA149) -140A/B/C/P ORB LEFT WING BOT (XE9L5T.

ALPHA ( ) = 15.893 BETA ( ) = .187

SECTION ( ) LEFT WING BOT SURF DEPENDENT VARIABLE CP

BY BW	.2090	.3640	.4270	.5340	.6730	.7800	.8870	.9720
* CW								
[illegible]				.3797	.3066			
.738		.2237						
.673			.3333					
.814	.2056							
.679		.2497						
[illegible]				.2169	.1261	.1231		
[illegible]			.2212					
[illegible]							-.0705	
[illegible]	.2774							
.979		.1250						
[illegible]	.1256			.0806		.0477		
[illegible]			.0829					
.813		.0347						
[illegible]				-.0107	.0161	.0161		
[illegible]			.0249					
.955		.0407						
.975	.0720							
[illegible]			-.3022		-.3160		-.5551	

ALPHA ( ) = 15.915 BETA ( ) = -.292 MACH = 1.3964 Q = 598.94 P = 439.77 RN/ft = 2.9066

SECTION ( ) LEFT WING BOT SURF DEPENDENT VARIABLE CP

BY BW	.2090	.3640	.4270	.5340	.6730	.7800	.8870	.9720
* CW								
.010	-.3745	-.4691	-.0794	.5312	.5805	.5668	.5559	
[illegible]	.0000	-.2418	.1413	.5521	.5977	.6185	.6031	-.2428
[illegible]		-.1713	.3198					
[illegible]	-.0741			.5135	.5594	.5782	.5984	
[illegible]							-.0533	
[illegible]				.4632				
[illegible]			.3133					
[illegible]		.0531						
[illegible]	.0534							
[illegible]				.4305	.4984	.5431	.5179	
[illegible]							-.0795	
[illegible]		.2941						
[illegible]			.3414					
[illegible]	.1324							
[illegible]		.2665						
[illegible]				.4100	.4708	.5062	.4654	
[illegible]			.3955					
[illegible]							.1352	
[illegible]		.3495						

AMES 11-073(OA148) -140A/B/C/R ORB LEFT WING BOT (XE2L57)

ALPHA (6) = 15.915 BETA (3) = 4.292

SECTION (1)LEFT WING BOT SURF DEPENDENT VARIABLE CP

Z/BW	.2990	.3640	.4270	.5340	.6730	.7800	.8870	.9720
X/CW								
.400				.4150	.4722		.4115	
.402			.3855					
.503								.1157
.550				.3842	.3947			
.565			-.4546					
.600							.2605	
.637		.3520						
.650						.2897		
.670								.1109
[illegible]					.2476			
[illegible]				.2516				
.750						.2804	.2607	
.751			.2049					
.775				.3659	.3044			
.799		.2154						
.800			.3214					
.814	.1929							
.819		.2474						
.850				.2101	.1142	.1374		
.850			.2101					
.852								-.0914
.875	.2640							
.879		.436						
.901	.1197			.1515			.0386	
.905			.0832					
.918		.102						
.951				-.0107	.0106	.0295		
.975			.0409					
.977		.0499						
.980	.0717							
[illegible]			-.2782		-.3279		-.5171	

AMES 11-0731(0A148) -140A/B/C/R OPB LEFT WING BOT (MEBLSB) (05 AUG 75)

REFERENCE DATA

SREF =	[illegible] SQ.FT.	XMRP =	1076.6800 IN.	XO	
LREF =	[illegible] IN.	YMRP =	.0000 IN.	YO	
BREF =	[illegible] IN.	ZMRP =	375.0000 IN.	ZO	
SCALE =	.0310				

PARAMETRIC DATA

RUDDER =	10.000	SPDBRK =	55.000
BDFLAP =	15.300	L-ELVN =	4.000
R-ELVN =	-4.000	MACH =	1.250

ALPHA (1) = -4.015 BETA (1) = -3.834 MACH = 1.2474 Q = 600.07 P = 560.87 RN/L = 3.9101

SECTION (1)LEFT WING BOT SURF DEPENDENT VARIABLE CP

Z/BW	.2330	.3540	.4270	.5340	.6730	.7800	.8870	.9720
X/CW								
.010	-.1462	-.2827	-.1970	-.4019	-.5052	-.3540	-.3220	
.020	.0030	-.2671	-.3028	-.5512	-.5448	-.5818	-.5573	-.6013
.040		-.2624	-.3454					
.050	-.1479			-.5735	-.5716	-.5949	-.5865	
.069								
.090				-.5356				-.6553
.091			-.2372					
.098		-.1441						
.094	-.1474							
.150				-.4928	5118	-.5249	-.5380	
.167								
.183		-.0582						-.3921
.177			-.2165					
.209	-.1292							
.246		-.1379						
.250				-.2355	-.4601	-.4780	-.4968	
.274			-.1943					
.346								
.330		-.1604						-.5860
[illegible]				-.1960	-.2660		-.4400	
[illegible]			-.1634					
[illegible]								-.5830
[illegible]				-.1397	-.1757			
[illegible]			-.3750					
[illegible]							-.4194	
[illegible]		-.1096						
[illegible]						-.2228		
[illegible]								-.5592
[illegible]					-.2203			
[illegible]				-.1963				
[illegible]						-.1584	-.3852	
[illegible]			-.2072					
[illegible]				-.1381	-.1639			
[illegible]		-.1693						
[illegible]			-.1473					
[illegible]	-.2050							
[illegible]		-.1811						
[illegible]				-.2399	-.1918	-.2315		

AMES 11-073(OA148) -140A/B/C/R ORB LEFT WING BOT (XEEL58)

ALPHA (1) = -4.015 BETA (1) = -3.834

SECTION (1) LEFT WING BOT SURF DEPENDENT VARIABLE CP

BY BW	.2990	.3640	.4270	.5340	.6730	.7800	.8870	.9720
CW								
.857			-.2099					
.882								
.906	-.1406						-.5178	
.979		-.2343						
.910	-.1663			-.2981		-.4080		
.935			-.2917					
.919		-.2807						
.951				-.3315	-.2764	-.3464		
.963			-.3473					
.945		-.2893						
.966	-.2573							
.991			-.0928		-.1890		-.1474	

ALPHA (1) = -4.012 BETA (2) = .202 MACH = 1.2474 Q = 600.07 P = 550.87 RN/L = 3.0101

SECTION (1) LEFT WING BOT SURF DEPENDENT VARIABLE CP

BY BW	.2990	.3640	.4270	.5340	.6730	.7800	.8870	.9720
CW								
.010	-.0996	.1350	-.0924	-.1032	-.3295	-.3939	-.3778	
.032	.1000	.1415	-.5524	-.5478	-.5890	-.5899	-.5924	-.6593
.042		-.1071	-.2070					
.051	-.1131			-.5266	-.5891	-.6207	-.6222	
.069								-.6867
.081				-.4952				
.092			-.1900					
.095		-.0896						
.124	-.1136							
.150				-.2930	-.5077	-.5455	-.5679	
.151								-.4121
.182		.0001						
.192			-.1663					
.223	-.0954							
.246		-.0998						
.251				-.1853	-.3987	-.4924	-.5249	
.274			-.1432					
.345								-.6352
.402		-.1074						
.410				-.1423	-.1695		-.4658	
.443			-.1153					
.543								-.6146
.572				-.1152	-.1344			
.645			-.3979					
.800							-.3320	

AMES 11-073:0A148) -140A/B/C/P OFB LEFT WING BOT (XE6L53)

ALPHA (1) = -4.012 BETA (2) = .202

SECTION (1) LEFT WING BOT SURF DEPENDENT VARIABLE CP

Y/BW	.0230	.3540	.4270	.5340	.6730	.7800	.8870	.9720
.37		-.0992						
.470					-.1753			
.670							-.5848	
.770					-.2006			
.790				-.1854				
.790					-.1448	-.1427		
.790			-.2056					
.790				-.1381	-.1564			
.795		-.1629						
.819			-.1415					
.834	-.1939							
.870		-.1735						
.890				-.2311	-.1999	-.2150		
.897			-.2032					
.898							-.4722	
.905	-.1357							
.909		-.2344						
.910	-.1978			-.3015		-.3041		
.915			-.2886					
.919		-.2795						
.924				-.3455	-.2647	-.3378		
.924			-.3425					
.925		-.2929						
.945	-.2799							
1.000			-.1425		-.2263		-.1375	

ALPHA (1) = -4.007 BETA (3) = 4.280 MACH = 1.2474 Q = 600.07 P = 550.87 RN/L = 3.0101

SECTION (1) LEFT WING BOT SURF DEPENDENT VARIABLE CP

Y/BW	.0230	.3540	.4270	.5340	.6730	.7800	.8870	.9720
.310	-.0990	-.0499	.0150	-.3917	-.5405	-.4271	-.4164	
.340	-.0990	-.0813	-.0016	-.5237	-.5754	-.6119	-.6145	-.5903
.370		-.0518	-.0347					
.390	-.1001			-.4481	-.5828	-.6353	-.6409	
.391								-.5872
.391				-.3872				
.391			-.1115					
.391		-.0111						
.391	-.0991							
.391				-.3079	-.4728	-.5463	-.5733	
.397								-.4093
.398		.0882						

AMES 11-073(OA148) -140A/B/C/R ORB LEFT WING BOT (XEE_5B)

ALPHA (1) = -4.007 BETA (3) = 4.280

SECTION 1 LEFT WING BOT SURF DEPENDENT VARIABLE CP

Z/BW	.2990	.3640	.4270	.5340	.6730	.7800	.8870	.9720
X/CW								
.177			-.1115					
.224	-.0020							
.246		-.0457						
.260				-.1418	-.1872	-.4231	-.5325	
.274			-.0895					
.295								-.6228
.342		-.0622						
.400				-.1073	-.1308		-.3716	
.402			-.0868					
.407								-.5486
.470				-.0945	-.1118			
.480			-.3543					
.511								
.574		-.0764					-.1537	
.642						-.1612		
.645								-.2021
.710					-.1862			
.767				-.1753				
.791								
.792						-.1411	-.1207	
.794			-.1959					
.795				-.1315	-.1459			
.798		-.1555						
.814			-.1337					
.834	-.2030							
.839		-.1701						
.852				-.2246	-.2173	-.2240		
.857			-.2005					
.862								
.866	-.1266							-.2661
.874		-.2354						
.901	-.1843			-.2869			-.2913	
.910			-.2927					
.912		-.2753						
.941				-.3555	-.2628	-.3330		
.942			-.3394					
.945		-.2876						
.965	-.2816							
.967			-.1752		-.2611		-.1733	

AMES 11-073(OA148) -140A/B/C/R OPB LEFT WING BOT (XE9L59)

ALPHA = 0 = .035 BETA = 11 = -3.868 MACH = 1.2470 Q = 599.89 P = 551.11 RN/L = 3.0093

SECTION 1 LEFT WING BOT SURF DEPENDENT VARIABLE CP

BY BW	.2300	.3540	.4270	.5340	.6730	.7800	.8870	.9720
X CW								
.010	.0044	.0120	.2110	-.1767	-.2920	-.2148	-.1289	
.020	.0700	-.0887	.1746	-.3265	-.3519	-.3595	-.3876	-.3256
.040		-.0169	-.0153					
.060	-.0310			-.2405	-.3322	-.3775	-.3950	
.080								-.3576
.100				-.2089				
.120			-.0515					
.155		.0232						
.194	-.0549							
.250				-.1389	-.2243	-.2719	-.3178	
.304								-.2351
.353		.0899						
.402			-.0661					
.429	-.0565							
.548		-.0289						
.601				-.0963	-.0957	-.1940	-.2654	
.674			-.0571					
.745								-.2001
.799		-.0416						
.900				-.0652	-.0689		-.1248	
.902			-.0517					
.947								-.1401
.970				-.0332	-.0483			
.974			-.4166					
.977							-.1101	
.980		-.0215						
.982						-.0887		
.984								-.1804
.986					-.1303			
.988				-.1180				
.990						-.0645	-.0728	
.992			-.1374					
.994				-.0591	-.0774			
.996		-.1188						
.998			-.0621					
1.000	-.1457							
1.002		-.1088						
1.004				-.1652	-.1679	-.1602		
1.006			-.1726					
1.008								-.2864
1.010	-.0944							
1.012		-.1741						
1.014	-.1881			-.2377			-.2749	
1.016			-.2216					
1.018		-.2339						

AMES 11-073(OA148) -140A/B/C/R ORB LEFT WING BOT (KEBLER)

ALPHA (R) = .035 BETA (R) = -3.958

SECTION LEFT WING BOT SURF DEPENDENT VARIABLE CP

BY SW	.0400	.2040	.4070	.5340	.6730	.7800	.8870	.9720
X SW								
.140				-.2941	-.2376	-.3200		
.183			-.2890					
.250		-.2344						
.305	-.1871							
1.000			-.0820		-.0988		-.2086	

ALPHA (R) = .040 BETA (R) = .189 MACH = 1.2470 Q = 599.89 P = 551.11 RN/L = 3.0053

SECTION LEFT WING BOT SURF DEPENDENT VARIABLE CP

BY SW	.0390	.2040	.4070	.5340	.6730	.7800	.8870	.9720
X SW								
.140	-.0398	.0081	.2816	-.1635	-.3073	-.2544	-.1779	
.183	.0000	-.0088	.2828	-.1948	-.2920	-.3796	-.4217	-.3302
.250		.0048	.0530					
.305	-.0484			-.1739	-.2822	-.3647	-.4246	
.375								-.3255
.440				-.1489				
.500			.0002					
.610		.0464						
.710	-.0052							
.810				-.0393	-.1573	-.2369	-.3255	
.910								-.2192
.940		.0181						
.970			-.0370					
.983	-.0444							
.995		-.0011						
1.000				-.0512	-.0785	-.0812	-.1203	
1.000			-.0006					
1.000								-.1017
1.000		-.0119						
1.000				-.0358	-.0295		-.0792	
1.000			-.0064					
1.000								-.1338
1.000				-.0150	-.0237			
1.000			-.0713					
1.000							-.0860	
1.000		-.0091						
1.000						-.0720		
1.000								-.1592
1.000					-.1175			
1.000				-.1042				
1.000						-.0627	-.0654	
1.000			-.1368					

AMES 11-073:OA148, -140A/B/C/R ORB LEFT WING BOT NEELEE

ALPHA (2) = [illegible] BETA (2) = [illegible]

SECTION (1) LEFT WING BOT SURF DEPENDENT VARIABLE CP

ZY BW	.2930	.3640	.4270	.5340	.6730	.7800	.8870	.9720
X/CW								
[illegible]				-.0448	-.0700			
[illegible]		-.1140						
[illegible]			-.0521					
[illegible]	-.1419							
[illegible]		-.1013						
[illegible]				-.1537	-.1717	-.1630		
[illegible]			-.1323					
[illegible]	-.0067							-.2823
[illegible]		-.1756						
[illegible]	-.1274			-.2330			-.2651	
[illegible]			-.2205					
[illegible]		-.2290						
[illegible]				-.2978	-.2374	-.3172		
[illegible]			-.2927					
[illegible]		-.2344						
[illegible]	-.2031							
[illegible]			-.1600		-.1537		-.1684	

ALPHA (2) = [illegible] BETA (3) = 4.251 MACH = 1.2470 Q = 599.69 P = 551.11 RNYL = 3.0093

SECTION (1) LEFT WING BOT SURF DEPENDENT VARIABLE CP

ZY BW	.2930	.3640	.4270	.5340	.6730	.7800	.8870	.9720
X/CW								
[illegible]	-.1200	-.0617	.2921	-.0457	-.2686	-.2660	-.1961	
[illegible]	.0000	-.0335	.2601	-.0563	-.1808	-.3481	-.4216	-.1874
[illegible]		-.0179	.1169					
[illegible]	-.0833			-.1055	-.2276	-.2748	-.3464	
[illegible]				-.0755				-.1924
[illegible]			.0547					
[illegible]		.0477						
[illegible]	-.0974							
[illegible]				-.0590	-.0894	-.0984	-.1177	
[illegible]		.1353						-.1409
[illegible]			-.0019					
[illegible]	-.0132							
[illegible]		.0355						
[illegible]				-.0191	-.0441	-.0619	-.0913	
[illegible]			.0097					
[illegible]		.0010						-.0354

[illegible] FEB 76 TABULATED PRESSURE DATA - OA148 (AMES 11-073-1) [illegible]

AMES 11-073(OA148) -140A/B/C/R ORB LEFT WING BOT [illegible]

ALPHA (B) = .037 BETA (B) = 4.261

SECTION (LEFT WING BOT SURF DEPENDENT VARIABLE CP

Y/B	.2930	.3640	.4270	.5340	.6730	.7800	.8870	.9720
X/C								
.400				.0011	.0071		-.0594	
.410			.0106					
.420								-.1157
.550				-.0049	-.0071			
.560			-.4823					
.610							-.0837	
.630		.0015						
.640						-.0666		
.670								-.1594
.680					-.1124			
.700				-.1019				
.710						-.0590	-.0769	
.750			-.1340					
.770				-.0445	-.0666			
.790		-.1181						
.810			-.0434					
.830	-.1781							
.870		-.1088						
[illegible]				-.1477	-.1771	-.1942		
[illegible]			-.1378					
[illegible]								-.3139
[illegible]	-.1117							
[illegible]		-.1716						
[illegible]	-.1178			-.3078			-.2693	
[illegible]			-.3471					
[illegible]		-.1178						
[illegible]				-.1403	-.2093	-.2047		
[illegible]			-.3.5					
[illegible]		-.1438						
[illegible]	-.3078							
[illegible]			-.1975		-.2240		-.1722	

[illegible] = 3.880 [illegible] = -3.661 MACH = 1.2487 Q = 593.84 P = 551.24 [illegible] = [illegible]

SECTION LEFT WING BOT SURF DEPENDENT VARIABLE CP

Y/B	.2930	.3640	.4270	.5340	.6730	.7800	.8870	.9720
X/C								
[illegible]	.0358	-.0490	.4264	.2795	.1315	.1354	.1661	
[illegible]	.0000	-.0136	.3280	.1890	.1110	.0514	-.0037	.0773
[illegible]		.0198	.2171					
[illegible]	.0336			.0518	.0017	.0332	.0091	
[illegible]								.0350
[illegible]				.0483				

C-2

DATE 10 FEB 76 TABULATED PRESSURE DATA - . +8 (AMES 11-073-1) PAGE 2575

AMES 11-073(OA148) -140A/B/C/R ORB LEFT WING BOT (XE8L58)

ALPHA (3) = 3.928 BETA (1) = -3.861

SECTION (1)LEFT WING BOT SURF DEPENDENT VARIABLE CP

2Y/BW	.2990	.3640	.4270	.5340	.6730	.7800	.8870	.9720
X/CW								
.081			.1342					
.086		.0972						
.094	.0136							
.150				.0372	.0509	.0730	.0799	
.157								-.0822
.163		.2054						
.177			.0752					
.223	-.0051							
.246		.0724						
.250				.0686	.0637	.0787	.0422	
.274			.0764					
.345								.0121
.390		.0710						
.400				.0769	.0936		.0495	
.402			.0631					
.403								-.0252
.550				.0696	.0796			
.565			-.4684					
.600							-.0040	
.637		.0674						
.650						.0138		
.670								-.0838
.700					-.0450			
.725				-.0376				
.750						.0230	.0111	
.760			-.0696					
.775				.0440	.0227			
.798		-.0553						
.808			.0352					
.834	-.0698							
.839		-.0247						
.850				-.0807	-.1131	-.1033		
.857			-.0499					
.862								-.2283
.865	.0347							
.879		-.1125						
.900	-.0551			-.1720			-.2143	
.905			-.1506					
.919		-.1707						
.950				-.2458	-.2318	-.2895		
.953			-.2409					
.955		-.1899						
.964	-.1238							
1.000			-.0848		-.0939		-.3425	

AMES 11-073(OA148) -140A/B/C/R ORB LEFT WING BOT (XE8L58)

ALPHA (3) = 3.929 BETA (2) = .192 MACH = 1.2467 Q = 599.84 P = 551.34 RN/L = 3.0120

SECTION (1)LEFT WING BOT SURF DEPENDENT VARIABLE CP

2Y/BW	.2990	.3640	.4270	.5340	.6730	.7800	.8870	.9720
X/CW								
.010	-.0894	-.2287	.3666	.2851	.1613	.1541	.1824	
.020	.0000	-.1085	.3659	.1734	.1345	.0874	.0428	.0235
.040		-.0716	.2453					
.050	-.0189			.1023	.0356	.0656	.0555	
.069								
.080				.0926				.0034
.081			.1534					
.086		.0599						
.094	-.0246							
.150				.0638	.0940	.0891	.0841	
.157								
.163		.1999						-.0965
.177			.0878					
.229	-.0239							
.245		.0887						
.250				.0861	.0798	.0787	.0417	
.274			.0973					
.345								
.330		.0930						.0001
.400				.0923	.1106		.0687	
.402			.0864					
.503								
.550				.0907	.0900			-.0410
.565			-.5203					
.600								
.637		.0833					-.0139	
.650								
.670						.0083		
.700								-.1045
.725					-.0480			
.750				-.0225				
.760						.0119	-.0094	
.775			-.0631					
.798				.0609	.0318			
.808		-.0456						
.834	-.0713		.0454					
.839		-.0225						
.850								
.857				-.0584	-.1269	-.1247		
.862			-.0487					
.865	.0109							-.2612
.879		-.1187						
.900	-.0701			-.1674				
.905			-.1571				-.2171	
.919		-.1651						

AMES 11-073(OA148) -140A/B/C/R ORB LEFT WING BOT (XE8L58)

ALPHA (3) = 3.929 BETA (2) = .192

SECTION (1)LEFT WING BOT SURF DEPENDENT VARIABLE CP

2Y/BW	.2990	.3640	.4270	.5340	.6730	.7800	.8870	.9720
X/CW								
.950				-.2475	-.2311	-.2698		
.953			-.2360					
.955		-.1883						
.965	-.1463							
1.000			-.1519		-.0784		-.3020	

ALPHA (3) = 3.933 BETA (3) = 4.251 MACH = 1.2467 Q = 599.84 P = 551.34 RN/L = 3.0120

SECTION (1)LEFT WING BOT SURF DEPENDENT VARIABLE CP

2Y/BW	.2990	.3640	.4270	.5340	.6730	.7800	.8870	.9720
X/CW								
.010	-.2441	-.3617	.2782	.3418	.2070	.2219	.2414	
.020	.0000	-.2133	.3154	.2384	.1754	.1667	.1246	-.0397
.040		-.1650	.2597					
.050	-.0936			.1698	.0900	.1097	.1187	
.069								-.0288
.080				.1362				
.081			.1744					
.086		.0140						
.094	-.0740							
.150				.1036	.1204	.1107	.1078	
.157								-.1071
.163		.1795						
.177			.1106					
.229	-.0591							
.246		.1025						
.250				.1104	.1002	.1048	.0739	
.274			.1203					
.345								-.0341
.390		.1108						
.400				.1175	.1403		.0908	
.402			.1108					
.503								-.0811
.550				.0972	.0979			
.565			-.4411					
.600							-.0188	
.637		.0959						
.650						.0127		
.670								-.1329
.700					-.0463			
.725				-.0182				
.750						-.0191	-.0169	
.760			-.0608					

AMES 11-073(OA148) -140A/B/C/R ORB LEFT WING BOT (XE8L58)

ALPHA (3) = 3.933 BETA (3) = 4.251

SECTION (1)LEFT WING BOT SURF DEPENDENT VARIABLE CP

2Y/BW	.2990	.3640	.4270	.5340	.6730	.7800	.8870	.9720
X/CW								
.775				.0694	.0298			
.798		-.0483						
.808			.0449					
.834	-.0707							
.839		-.0164						
.850				-.0597	-.1381	-.1410		
.857			-.0478					
.862								-.2930
.865	.0016							
.879		-.1155						
.900	-.0577			-.1679			-.2210	
.905			-.1632					
.919		-.1560						
.950				-.2491	-.2119	-.2482		
.953			-.2168					
.955		-.1771						
.965	-.1591							
1.000			-.2024		-.1293		-.2815	

ALPHA (4) = 7.966 BETA (1) = -3.855 MACH = 1.2463 Q = 599.67 P = 551.57 RN/L = 3.0105

SECTION (1)LEFT WING BOT SURF DEPENDENT VARIABLE CP

2Y/BW	2990	3640	.4270	.5340	.6730	.7800	.8870	.9720
X/CW								
.010	-.0318	-.2392	.3998	.5452	.4873	.5724	.5792	
.020	.0000	-.0629	.4529	.4128	.4246	.4491	.4634	.0837
.040		-.0177	.3759					
.050	.0687			.3135	.3142	.3448	.3836	
.069								
.080				.2567				.1268
.081			.2740					
.086		.1317						
.094	.0647							
.150				.2168	.2754	.3060	.2929	
.157								-.0455
.163		.2954						
.177			.2073					
.229	.0588							
.246		.1773						
.250				.2236	.2363	.2794	.2365	
.274			.2037					
.345								.0936
[illegible]		.1875						

AMES 11-073(OA148) -140A/B/C/R ORB LEFT WING BOT (XEBL58)

ALPHA (4) = 7.966 BETA (1) = -3.855

SECTION (1)LEFT WING BOT SURF DEPENDENT VARIABLE CP

2Y/BW	.2990	.3640	.4270	.5340	.6730	.7800	.8870	.9720
X/CW								
.400				.2177	.2939		.2270	
.402			.1980					
.503								.0445
.550				.2005	.1912			
.565			-.5133					
.600							.0780	
.637		.1719						
.650						.1123		
.670								-.0125
.700					.0280			
.725				.0509				
.750						.0886	.0758	
.760			.0102					
.775				.1680	.1007			
.799		.0268						
.808			.1260					
.834	.0107							
.839		.0588						
.850				.0045	-.0652	-.0528		
.857			.0365					
.862								-.1962
.865	.1099							
.879		-.0529						
.900	-.0040			-.1138			-.1618	
.905			-.0928					
.919		-.1094						
.920				-.1901	-.1668	-.2287		
.935			-.1937					
.945		-.1511						
.955	-.0909							
1.000			-.1104		-.2050		-.5108	

ALPHA (4) = 7.970 BETA (2) = .187 MACH = 1.2463 Q = 599.67 P = 551.57 RN/L = 3.0105

SECTION (1)LEFT WING BOT SURF DEPENDENT VARIABLE CP

2Y/BW	.2990	.3640	.4270	.5340	.6730	.7800	.8870	.9720
X/CW								
.010	-.2161	-.4619	.2259	.5490	.5018	.5572	.5592	
.020	.0000	-.2013	.3390	.4441	.4480	.4590	.4691	-.0458
.040		-.1408	.3291					
.050	-.0202			.3456	.3449	.3529	.3916	
.060								.0196
.080				.2872				

AMES 11-073(OA148) -140A/B/C/R ORB LEFT WING BOT (XE8L58)

ALPHA (4) = 7.970 BETA (2) = .187

SECTION (1)LEFT WING BOT SURF DEPENDENT VARIABLE CP

2Y/BW	.2990	.3640	.4270	.5340	.6730	.7800	.8870	.9720
X/CW								
.081			.2543					
.086		.0373						
.094	.0082							
.150				.2482	.2881	.3127	.3016	
.157								-.0758
.163		.2385						
.177			.2105					
.229	.0307							
.246		.1569						
.250				.2303	.2528	.2843	.2374	
.274			.2178					
.345								.0438
.390		.2024						
.400				.2388	.2950		.2168	
.402			.2110					
.503								.0048
.540				.2150	.201[illegible]			
.585			-.5413					
.600							.0686	
.637		.1964						
.650						.1067		
.670								-.0389
.700					.0354			
.725				.0622				
.750						.0731	.0553	
.760			.0162					
.775				.1728	.1096			
.799		.0350						
.808			.1389					
.834	.0151							
.839		.0687						
.850				.0193	-.0737	-.0673		
.857			.0358					
.862								-.2327
.865	.0940							
.879		-.0555						
.900	.0181			-.1111			-.1578	
.905			-.0999					
.919		-.0867						
.950				-.1905	-.1507	-.1968		
.9[illegible]3			-.1675					
.945		-.1319						
.955	-.1018							
1.000			-.1907		-.143[illegible]		-.4895	

AMES 11-073(OA148) -140A/B/C/R ORB LEFT WING BOT (XEBL58)

ALPHA (4) = 7.894 BETA (3) = 4.250 MACH = 1.2463 Q = 599.67 P = 551.57 RN/L = 3.0105

SECTION (1)LEFT WING BOT SURF DEPENDENT VARIABLE CP

2Y/BW	.2000	.3640	.4270	.5340	.6730	.7800	.8870	.9720
X/CW								
.010	-.3943	-.5257	.0676	.5107	.4772	.5244	.5317	
.020	.0000	-.3059	.2045	.4279	.4330	.4482	.4624	-.1917
.040		-.2401	.2615					
.050	-.1045			.3464	.3425	.3561	.3911	
.069								-.0872
.080				.2884				
.091			.2085					
.096		-.0360						
.094	-.0580							
.152				.2509	.2828	.3154	.2994	
.157								-.1090
.163		.1866						
.177			.2045					
.225	-.0176							
.246		.1320						
.250				.2353	.2754	.2981	.2328	
.274			.2220					
.345								-.0084
.390		.1982						
.400				.2476	.2809		.2044	
.402			.2220					
.503								-.0439
.550				.2002	.1971			
.565			-.4835					
.600							.0586	
.637		.1906						
.650						.0875		
.670								-.0705
.700					.0319			
.725				.0607				
.750						.0555	.0432	
.760			.0134					
.775				.1658	.1138			
.792		.0298						
.809			.1278					
.834	.0061							
.839		.0651						
.850				.0181	-.0829	-.0836		
.857			.0300					
.862								-.2676
.865	.0818							
.879		-.0449						
.900	.0184			-.1057			-.1609	
.905			-.0330					
.919		-.0860						

AMES 11-073(OA148) -140A/B/C/R ORB LEFT WING BOT (XEBL58)

ALPHA (4) = 7.894 BETA (3) = 4.250

SECTION (1)LEFT WING BOT SURF DEPENDENT VARIABLE CP

2Y/BW	.2990	.3640	.4270	.5340	.6730	.7800	.8870	.9720
X/CW								
.950				-.1978	-.1490	-.1818		
.953			-.1559					
.955		-.1260						
.965	-.1122							
1.000			-.1630		-.1466		-.4696	

ALPHA (5) = 1.923 BETA (1) = -3.838 MACH = 1.2454 Q = 599.32 P = 552.04 RN/L = 3.0114

SECTION (1)LEFT WING BOT SURF DEPENDENT VARIABLE CP

2Y/BW	.2990	.3640	.4270	.5340	.6730	.7800	.8870	.9720
X/CW								
.010	-.1750	-.4042	.2952	.6965	.6914	.7480	.7315	
.020	.0000	-.1072	.4488	.6042	.6437	.6762	.6769	-.0363
.040		-.0393	.4677					
.050	.0765			.4973	.5413	.5757	.5925	
.069								.0770
.080				.4387				
.081			.4028					
.086		.1568						
.094	.1042							
.150				.3944	.4615	.4954	.4513	
.157								-.0398
.163		.3778						
.177			.3481					
.229	.1296							
.246		.2867						
.250				.3801	.4273	.4409	.3781	
.274			.3448					
.345								.1388
.390		.3229						
.400				.3789	.4015		.3335	
.402			.3663					
.503								.1021
.550				.3058	.3003			
.565			.5385					
.600							.1734	
.637		.2898						
.650						.1974		
.670								.0599
.700					.1030			
.775				.1346				
.750						.1647	.1473	
.760			.0732					

AMES 11-073(OA148) -140A/B/C/R ORB LEFT WING BOT (XE8L58)

ALPHA (5) = 11.923 BETA (1) = -3.938

SECTION (1)LEFT WING BOT SURF DEPENDENT VARIABLE CP

2Y/BW	.2990	.3640	.4270	.5340	.6730	.7800	.8870	.9720
X/CW								
.775				.2705	.1772			
.798		.1033						
.808			.2033					
.834	.0763							
.839		.1267						
.850				.0784	-.0062	.0127		
.857			.1068					
.862								-.1627
.865	.1736							
.879		-.0005						
.900	.0686			-.0573			-.0948	
.905			-.0517					
.919		-.0393						
.950				-.1320	-.1037	-.1409		
.953			-.1311					
.955		-.0955						
.955	-.0549							
1.000			-.1550		-.2964		-.5814	

ALPHA (5) = 11.931 BETA (2) = .197 MACH = 1.2454 Q = 599.32 P = 552.04 RN/L = 3.0114

SECTION (1)LEFT WING BOT SURF DEPENDENT VARIABLE CP

2Y/BW	.2990	.3640	.4270	.5340	.6730	.7800	.8870	.9720
X/CW								
.010	-.3515	-.4917	.1044	.6267	.6404	.6640	.6452	
.020	.0000	-.2212	.2825	.5716	.6142	.6395	.6280	-.1988
.040		-.1481	.3768					
.040	-.0156			.4907	.5336	.5570	.5654	
.069								-.0379
.080				.4356				
.081			.3422					
.086		.0599						
.094	.0459							
.150				.3901	.4620	.4861	.4361	
.157								-.0794
.163		.3053						
.177			.3301					
.229	.0964							
.245		.2411						
.250				.3854	.4181	.4342	.3619	
.274			.3469					
.345								.0767
.340		.3271						

AMES 11-073(OA148) -140A/B/C/R ORB LEFT WING BOT (XEBL5B)

ALPHA (5) = 11.931 BETA (2) = .197

SECTION (1)LEFT WING BOT SURF DEPENDENT VARIABLE CP

2Y/BW	.2990	.3640	.4270	.5340	.6730	.7800	.8870	.9720
X/CW								
.400				.3712	.3934		.3123	
.402			.3692					
.503								.0454
.550				.2999	.2923			
.545			-.5617					
.600							.1488	
.637		.2856						
.650						.1751		
.670								.0155
.700					.1177			
.725				.1372				
.750						.1559	.1362	
.760			.0805					
.775				.2700	.1851			
.785		.0999						
.800			.2045					
.814	.0760							
.833		..319						
.850				.0821	-.0007	-.0053		
.857			.1051					
.882								
.885	.1563							-.2040
.893		.0040						
.900	.0786			-.0597			-.0946	
.905			-.0453					
.919		-.0249						
.950				-.1373	-.1046	-.1281		
.953			-.1106					
.955		- .0836						
.965	-.0550							
1.000			-.1632		-.2090		-.6035	

ALPHA (5) = 11.925 BETA (3) = 4.259 MACH = 1.2454 Q = 599.32 P = 552.04 RN/L = 3.0114

SECTION (1)LEFT WING BOT SURF DEPENDENT VARIABLE CP

2Y/BW	.2990	.3640	.4270	.5340	.6730	.7800	.8870	.9720
X/CW								
.010	-.4654	-.5409	-.0905	.5230	.5508	.5636	.5407	
.020	.0000	-.3720	.1219	.5131	.5602	.5864	.5602	-.3188
.040		-.2605	.2815					
.050	-.0957			.4564	.5114	.5275	.5211	
.069								-.1415
.090				.4085				

AMES 11-073(OA148) -140A/B/C/R ORB LEFT WING BOT (XEBL58)

ALPHA (5) = 11.925 BETA (3) = 4.259

SECTION (1)LEFT WING BOT SURF DEPENDENT VARIABLE CP

2Y/BW	.2990	.3640	.4270	.5340	.6730	.7800	.8870	.9720
X/CW								
.081			.2556					
.096		-.0185						
.094	-.0276							
.150				.3722	.4474	.4685	.4114	
.157								-.1261
.163		.2353						
.177			3019					
.229	.0385							
.246		.1908						
.250				.3742	.4050	.4169	.3465	
.274			.3425					
.345								.0191
.390		.3149						
.400				.3531	.3754		.2882	
.402			.3507					
.503								.0048
.550				.2877	.2791			
.555			-.5328					
.600							.1287	
.637		.2708						
.650						.1628		
.670								-.0155
.700					.1192			
.725				.1289				
.750						.1476	.1296	
.780			.0707					
.775				.2538	.1947			
.799		.0213						
.808			.1931					
.834	.0655							
.839		.1307						
.850				.0797	-.0098	.0100		
.857			.0918					
.875								-.2306
.885	.1440							
.893		.0154						
.900	.0816			-.0551			-.0951	
.905			-.0433					
.919		-.0290						
.950				-.1468	-.0939	-.1155		
.953			-.0995					
.955		-.0767						
.965	-.0612							
1.000			-.2396		-.1287		-.5518	

AMES 11-073(OA148) -140A/B/C/R ORB LEFT WING BOT (XEBL59) (05 AUG 75)

REFERENCE DATA

SREF = 2690.0000 SQ.FT. XMRP = 1076.6800 IN. XO
LREF = 474.8000 IN. YMRP = .0000 IN. YO
BREF = 935.0680 IN. ZMRP = 375.0000 IN. ZO
SCALE = .0300

PARAMETRIC DATA

RUDDER = 10.000 SPDBRK = 55.000
BDFLAP = 16.300 L-ELVN = 4.000
R-ELVN = -4.000 MACH = 1.100

ALPHA (1) = -4.026 BETA (1) = -3.831 MACH = 1.1006 Q = 600.08 P = 707.67 RN/L = 3.1805

SECTION (1)LEFT WING BOT SURF DEPENDENT VARIABLE CP

2Y/BW	.2990	.3640	.4270	.5340	.6730	.7800	.8870	.9720
X/CW								
.010	-.1816	-.3303	-.2837	-.6128	-.7356	-.5575	-.5436	
.020	.0000	-.3113	-.3882	-.7694	-.7827	-.7975	-.8102	-.8315
.040		-.2940	-.4092					
.050	-.1826			-.7236	-.8007	-.8304	-.8354	
.059								-.9209
.080				-.6967				
.091			-.2984					
.095		-.1442						
.098	-.1847							
.150				-.4667	-.6898	-.7308	-.7591	
.157								-.5324
.163		-.0671						
.177			-.2439					
.229	-.1537							
.246		-.1433						
.250				-.2992	-.5732	-.6638	-.6938	
.274			-.2022					
.345								-.8491
.390		-.1442						
.400				-.1570	-.1695		-.6164	
.402			-.1286					
.503								-.8148
.550				-.1260	-.1516			
.565			-.4355					
.600							-.3445	
.637		-.1104						
.650						-.1483		
.670								-.6664
.700					-.2368			
.725				-.2421				
.750						-.1289	-.0969	
.760			-.2614					
.775				-.1845	-.1722			
.798		-.2093						
.808			-.1939					
.834	-.2479							
.849		-.2342						
.850				-.2895	-.2744	-.2576		

AMES 11-073(OA148) -140A/B/C/R ORB LEFT WING BOT (XE8L59)

ALPHA (1) = -4.026 BETA (1) = -3.831

SECTION (1)LEFT WING BOT SURF DEPENDENT VARIABLE CP

2Y/BW	.2990	.3640	.4270	.5340	.6730	.7800	.8870	.9720
X/CW								
.857			-.2778					
.862								
.865	-.1859							-.4455
.879		-.3159						
.900	-.2600			-.3622			-.3497	
.905			-.3732					
.913		-.3769						
.950				-.3864	-.3201	-.4184		
.953			-.3917					
.955		-.3450						
.965	-.3168							
1.000			-.0222		-.0439		-.0787	

ALPHA (1) = -3.894 BETA (2) = .203 MACH = 1.1006 Q = 600.08 P = 707.67 RN/L = 3.1805

SECTION (1)LEFT WING BOT SURF DEPENDENT VARIABLE CP

2Y/BW	.2990	.3640	.4270	.5340	.6730	.7800	.8870	.9720
X/CW								
.010	-.1337	-.1597	-.1064	-.6034	-.7579	-.5952	-.6004	
.020	.0000	-.1544	-.1327	-.7594	-.7960	-.8313	-.8424	-.9012
.040		-.1467	-.2421					
.050	-.1272			-.6727	-.8050	-.8573	-.8687	
.069								-.8917
.080				-.6277				
.081			-.1758					
.086		-.0504						
.094	-.1325							
.100				-.2838	-.6726	-.7531	-.7820	
.157								
.163		.0269						-.5246
.177			-.1784					
.229	-.1095							
.246		-.0816						
.250				-.1801	-.2134	-.5596	-.7212	
.274			-.1353					
.345								
.350		-.0919						-.8547
.410								
.412				-.1232	-.1134		-.3770	
.503			-.1119					
.550								-.7126
.555				-.1155	-.1397			
.556			-.5449					
.600						-.1374		

AMES 11-073(OA148) -140A/B/C/R ORB LEFT WING BOT (XE8L59)

ALPHA (1) = -3.894 BETA (2) = .203

SECTION (1)LEFT WING BOT SURF DEPENDENT VARIABLE CP

2Y/BW	.2990	.3640	.4270	.5340	.6730	.7800	.8870	.9720
X/CW								
.637		-.1036						
.650						-.1577		
.670								-.3550
.700					-.2437			
.725				-.2362				
.750						-.1516	-.0699	
.760			-.2589					
.775				-.1798	-.1807			
.799		-.2044						
.808			-.1831					
.834	-.2369							
.839		-.2120						
.850				.2844	-.2968	-.2757		
.857			-.2705					
.862								-.3744
.865	-.1765							
.879		-.3048						
.900	-.2553			-.3719			-.3977	
.905			-.3749					
.919		-.3699						
.950				-.4302	-.3421	-.4239		
.953			-.4412					
.955		-.3552						
.965	-.3497							
1.000			-.0837		-.1286		-.1438	

ALPHA (1) = -4.013 BETA (3) = 4.281 MACH = 1.1006 Q = 600.08 P = 707.67 RN/L = 3.1805

SECTION (1)LEFT WING BOT SURF DEPENDENT VARIABLE CP

2Y/BW	.2990	.3640	.4270	.5340	.6730	.7800	.8870	.9720
X/CW								
.010	-.1209	-.0628	.0353	-.5806	-.7731	-.6330	-.6515	
.020	.0000	-.0578	.0087	-.7054	-.8081	-.8541	-.8733	-.8291
.040		-.0334	-.1079					
.060	-.1040			-.5603	-.7490	-.8409	-.8506	
.069								-.7744
.080				-.2895				
.081			-.0780					
.086		.0373						
.094	-.1037							
.150				-.2164	-.3102	-.6448	-.7988	
.157								-.4285
.163		.1052						

AMES 11-073(OA148) -140A/B/C/R ORB LEFT WING BOT (XE8L59)

ALPHA (1) = -4.013 BETA (3) = 4.281

SECTION (1)LEFT WING BOT SURF DEPENDENT VARIABLE CP

2Y/BW	.2990	.3640	.4270	.5340	.6730	.7800	.8870	.9720
X/CW								
.177								
.229	-.0656		-.1024					
.246		.0013						
.250				-.1358	-.1900	-.2629	-.4754	
.274			-.0699					
.345								
.390		-.0325						-.6053
.400								
.402				-.1052	-.1161		-.2296	
.503			-.0804					
.550								-.4752
.555				-.1258	-.1514			
.600			-.4029					
.637		-.1117					-.1974	
.650								
.670						-.1900		
.700								-.2707
.725					-.2682			
.750				-.2263				
.760						-.1874	-.1479	
.775			-.2681					
.798				-.1922	-.2109			
.808		-.2077						
.834	-.2473		-.1946					
.839		-.2270						
.850								
.857				-.3091	-.3237	-.3108		
.862			-.2766					
.865	-.1981							-.3503
.879		-.3150						
.900	-.2639			-.3964			-.4103	
.905			-.3941					
.910		-.3754						
.950				-.4598	-.3604	-.4365		
.953			-.4434					
.955		-.3832						
.955	-.3520							
1.000			-.1863		-.2590		-.1727	

AMES 11-073(OA148) -140A/B/C/R ORB LEFT WING BOT (XE8L59)

ALPHA (2) = .051 BETA (1) = -3.852 MACH = 1.1008 Q = 600.03 P = 707.43 RN/L = 3.1794

SECTION (1)LEFT WING BOT SURF DEPENDENT VARIABLE CP

2Y/BW	.2990	.3640	.4270	.5340	.6730	.7800	.8870	.9720
X/CW								
.010	-.0467	-.0078	.2118	-.3327	-.4674	-.3956	-.3091	
.020	.0000	-.0392	.1333	-.4794	-.5480	-.5606	-.5938	-.3989
.040		-.0239	-.0639					
.050	-.0885			-.3067	-.4487	-.5563	-.5943	
.069								-.4117
.080				-.2562				
.081			.0684					
.086		.0246						
.094	-.1083							
.150				-.1775	-.2143	-.3733	-.4629	
.157								-.2174
.163		.0864						
.177			-.0855					
.229	-.0754							
.246		-.0328						
.250				-.0610	-.0908	-.0937	-.0752	
.274			-.0423					
.345								-.0824
.390		-.0149						
.400				-.0008	.0135		-.0195	
.402			.0041					
.503								-.1413
.550				-.0036	-.0379			
.565			-.5211					
.600							-.1195	
.637		-.0004						
.650						-.0773		
.670								-.1979
.700					-.1562			
.725				-.1546				
.750						-.0996	-.1067	
.760			-.1881					
.775				-.0591	-.0899			
.798		-.1525						
.808			-.0987					
.834	-.1843							
.839		-.1464						
.850				-.2137	-.2319	-.2558		
.857			-.1777					
.862								-.3457
.865	-.0858							
.879		-.2373						
.900	-.1852			-.3117			-.3747	
.905			-.2993					
.919		-.2989						

AMES 11-073(OA148) -140A/B/C/R ORB LEFT WING BOT (XE8L59)

ALPHA (2) = .051 BETA (1) = -3.852

SECTION (1)LEFT WING BOT SURF DEPENDENT VARIABLE CP

2Y/BW	.2990	.3640	.4270	.5340	.6730	.7800	.8870	.9720
X/CW								
.950				-.3751	-.2982	-.4148		
.953			-.3649					
.955		-.2944						
.965	-.2522							
1.000			0340		-.0071		-.1160	

ALPHA (2) = .053 BETA (2) = .191 MACH = 1.1008 Q = 600.03 P = 707.43 RN/L = 3.1794

SECTION (1)LEFT WING BOT SURF DEPENDENT VARIABLE CP

2Y/BW	.2990	.3640	.4270	.5340	.6730	.7800	.8870	.9720
X/CW								
.010	-.0968	-.0092	.2845	-.2732	-.4527	-.4145	-.3297	
.020	.0000	-.0159	.2167	-.2529	-.4069	-.5423	-.5900	-.2168
.040		.0073	.0583					
.050	-.1052			-.2350	-.3530	-.4403	-.4669	
.069								-.2109
.090				-.1590				
.081			.0025					
.086		.0691						
.094	-.1070							
.150				-.1104	-.0884	-.0666	-.1237	
.157								-.1554
.163		.1621						
.177			-.0297					
.[illegible]	-.0648							
.2[illegible]5		.0232						
.250				-.0295	-.0552	-.0716	-.1178	
.274			.0044					
.345								-.0886
.390		.0239						
.400				.0199	.0353		-.0204	
.402			.0074					
.503								-.1573
.550				-.0024	-.0353			
.555			-.6181					
.600							-.1431	
.637		-.0123						
.650						-.0955		
.672								-.1940
.700					-.1670			
.725				-.1559				
.750						-.1190	-.1334	
.760			-.1834					

AMES 11-073(OA148) -140A/B/C/R ORB LEFT WING BOT (XE8L59)

ALPHA (2) = .053 BETA (2) = .191

SECTION (1)LEFT WING BOT SURF DEPENDENT VARIABLE CP

2Y/BW	.2990	.3640	.4270	.5340	.6730	.7800	.8870	.9720
X/CW								
.775				-.0672	-.1021			
.798		-.1448						
.808			-.0809					
.834	-.1749							
.839		-.1297						
.850				-.2136	-.2497	-.2705		
.857			-.1507					
.862								-.3744
.865	-.0842							
.879		-.2430						
.900	-.1780			-.3156			-.3822	
.905			-.2945					
.919		-.2908						
.950				-.3903	-.3080	-.4254		
.953			-.3551					
.955		-.3109						
.965	-.2520							
1.000			-.0276		-.0405		-.1024	

ALPHA (2) = .049 BETA (3) = 4.255 MACH = 1.1000 Q = 600.03 P = 707.43 RN/L = 3.1794

SECTION (1)LEFT WING BOT SURF DEPENDENT VARIABLE CP

2Y/BW	.2990	.3640	.4270	.5340	.6730	.7800	.8870	.9720
X/CW								
.010	-.2021	-.0423	.3528	-.0701	-.3057	-.3607	-.2917	
.020	.0000	-.0173	.2904	-.0992	-.2438	-.3454	-.4552	-.1585
.040		.0082	.1647					
.050	-.1472			-.0847	-.2251	-.2617	-.3299	
.069								-.1718
.080				-.0640				
.091			.0859					
.086		.0942						
.094	-.1196							
.150				-.0182	-.0388	-.0788	-.1112	
.157								-.1656
.163		.2067						
.177			.0452					
.229	-.0590							
.246		.0900						
.250				.0088	-.0353	-.0577	-.1043	
.274			.0518					
.345								-.1256
.390		.0692						

AMES 11-073(OA148) -140A/B/C/R ORB LEFT WING BOT (XE8L59)

ALPHA (2) = .049 BETA (3) = 4.255

SECTION (1)LEFT WING BOT SURF DEPENDENT VARIABLE CP

2Y/BW	.2990	.3640	.4270	.5340	.6730	.7800	.8870	.9720
X/CW								
.400				.0223	.0251		-.0447	
.402			.0371					
.503								-.1886
.550				-.0258	-.0490			
.565			-.4908					
.600							-.1663	
.637		-.0170						
.650						-.1247		
.670								-.2174
.700					-.1921			
.725				-.1687				
.750						-.1488	-.1597	
.760			-.1964					
.775				-.0945	-.1294			
.793		-.1533						
.808			-.0925					
.814	-.1879							
.823		-.1380						
.850				-.2168	-.2728	-.2837		
.857			-.1825					
.862								-.4059
.865	-.1151							
.879		-.2438						
.900	-.1907			-.3335			-.3852	
.905			-.3015					
.919		-.3067						
.950				-.3851	-.3177	-.4209		
.953			-.3637					
.955		-.3043						
.965	-.2905							
1.000			-.1408		-.1491		-.1441	

ALPHA (3) = 3.965 BETA (1) = -3.853 MACH = 1.1009 Q = 600.17 P = 707.44 RN/L = 3.1827

SECTION (1)LEFT WING BOT SURF DEPENDENT VARIABLE CP

2Y/BW	.2990	.3640	.4270	.5340	.6730	.7800	.8870	.9720
X/CW								
.010	-.0327	-.0619	.4633	.1985	.1117	.2010	.2412	
.020	.0000	-.0782	.4095	.0670	.1038	.0949	.0383	.0671
.049		.0232	.2459					
.050	-.0203			.0470	.0509	.0726	.1033	
.064								.0354
.080				.0413				

AMES 11-073(OA148) -140A/B/C/R ORB LEFT WING BOT (XE8L59)

ALPHA (3) = 3.965 BETA (1) = -3.853

SECTION (1)LEFT WING BOT SURF DEPENDENT VARIABLE CP

2Y/BW	.2990	.3640	.4270	.5340	.6730	.7800	.8870	.9720
X/CW								
.081			.1408					
.086		.1234						
.094	-.0422							
.150				.1043	.1246	.1361	.0960	
.157								-.0852
.163		.2320						
.177			.0939					
.229	-.0409							
.246		.0950						
.253				.1507	.1383	.1314	.0681	
.274			.1474					
.345								-.0148
.390		.1464						
.400				.1661	.1672		.0820	
.432			.1858					
.503								-.0721
.550				.0892	.0649			
.555			-.5884					
.600							-.0615	
.637		.0955						
.650						-.0197		
.670								-.1217
.700					-.1136			
.725				-.0780				
.750						-.0573	-.0440	
.760			-.1224					
.775				.0424	-.0090			
.790		-.0359						
.808			.0025					
.840	-.1189							
.849		-.0590						
.850				-.1356	-.1856	-.2015		
.857			-.0932					
.862								-.3104
.865	-.0031							
.879		-.1823						
.900	-.1213			-.2527			-.3282	
.905			-.2522					
.919		-.2493						
.950				-.3267	-.2297	-.3579		
.953			-.3425					
.955		-.2673						
.965	-.2136							
1.000			.0375		-.0123		-.3519	

AMES 11-073(OA148) -140A/B/C/R ORB LEFT WING BOT (XE8L59)

ALPHA (3) = 3.954 BETA (2) = .193 MACH = 1.1009 Q = 600.17 P = 707.44 RN/L = 3.1827

SECTION (1)LEFT WING BOT SURF DEPENDENT VARIABLE CP

2Y/SW	.2990	.3640	.4270	.5340	.6730	.7800	.8870	.9720
X/CW								
.010	-.1707	-.1997	.4393	.2772	.1851	.2595	.2937	
.020	.0000	-.0860	.4175	.1601	.1474	.1475	.1523	.0068
.040		-.0451	.2899					
.050	-.0833			.1281	.1064	.1262	.1353	
.069								.0009
.080				.1203				
.081			.1864					
.086		.0982						
.094	-.0926							
.150				.1382	.1388	.1589	.1083	
.157								-.0954
.163		.2588						
.177			.1407					
.229	-.0554							
.245		.1318						
.250				.1545	.1530	.1480	.0733	
.274			.1497					
.345								-.0553
.330		.1535						
.400				.1611	.1724		.0766	
.402			.1803					
.503								-.1093
.550				.0941	.0657			
.565			-.6689					
.600							-.0727	
.637		.0871						
.650						-.0325		
.670								-.1373
.700					-.1094			
.725				-.0714				
.750						-.0772	-.0784	
.760			-.1216					
.775				.0508	-.0032			
.798		-.0853						
.808			.0065					
.834	-.1132							
.838		-.0477						
.850				-.1259	-.1957	-.1990		
.857			-.0942					
.872								-.3557
.875	-.0218							
.879		-.1794						
.900	-.1146			-.2536			-.3323	
.915			-.2533					
.919		-.2324						

AMES 11-073(OA148) -140A/B/C/R ORB LEFT WING BOT (XEBL59)

ALPHA (3) = 3.964 BETA (2) = .193

SECTION (1)LEFT WING BOT SURF DEPENDENT VARIABLE CP

2Y/BW	.2990	.3540	.4270	.5340	.6730	.7800	.8870	.9720
X/CW								
.950				-.3365	-.2414	-.3616		
.953			-.3239					
.955		-.2608						
.965	-.2277							
1.000			.0114		.0053		-.3595	

ALPHA (3) = 3.966 BETA (3) = 4.249 MACH = 1.1009 Q = 600.17 P = 707.44 RN/L = 3.1827

SECTION (1)LEFT WING BOT SURF DEPENDENT VARIABLE CP

2Y/BW	.2990	.3540	.4270	.5340	.6730	.7800	.8870	.9720
X/CW								
.010	-.3534	-.3301	.3951	.3748	.2663	.3110	.3264	
.020	.0000	-.1754	.4245	.2640	.2290	.2278	.2211	-.1380
.040		-.1205	.3516					
.050	-.1697			.2185	.1628	.1582	.1730	
.068								-.1017
.090				.1864				
.091			.2514					
.096		.0768						
.094	-.1437							
.150				.1737	.1714	.1625	.1195	
.157								-.1358
.163		.2964						
.177			.2001					
.209	-.0788							
.246		.1920						
.250				.1721	.1510	.1508	.0610	
.274			.1852					
.345								-.1171
.340		.1932						
.400				.1524	.1536		.0529	
.402			.1759					
.403								-.1593
.540				.0877	.0563			
.565			-.5769					
.600							-.0942	
.637		.0872						
.650						-.0581		
.670								-.1856
.700					-.1147			
.725				-.0795				
.750						-.0771	-.1148	
.760			-.1216					

AMES 11-073(OA148) -140A/B/C/R ORB LEFT WING BOT (XE8L59)

ALPHA (3) = 3.956 BETA (3) = 4.249

SECTION (1)LEFT WING BOT SURF DEPENDENT VARIABLE CP

2Y/BW	.2990	.3640	.4270	.5340	.6730	.7800	.8870	.9720
X/CW								
.775				.0378	-.0195			
.798		-.0918						
.828			-.0087					
.834	-.1172							
.839		-.0583						
.850				-.1391	-.2095	-.2261		
.857			-.1055					
.867								-.4074
.866	-.0379							
.879		-.1879						
.900	-.1214			-.2731			-.3348	
.905			-.2573					
.919		-.2395						
.950				-.3540	-.2829	-.3630		
.955			-.3236					
.966		-.2705						
.966	-.2563							
1.000			-.1079		-.0664		-.3596	

ALPHA (4) = 7.902 BETA (1) = -3.848 MACH = 1.0993 Q = 599.26 P = 708.35 RN/L = 3.1817

SECTION (1)LEFT WING BOT SURF DEPENDENT VARIABLE CP

2Y/BW	.2990	.3640	.4270	.5340	.6730	.7800	.8870	.9720
X/CW								
.010	-.1234	-.3909	.4653	.6044	.5676	.6276	.6095	
.020	.0000	-.1559	.5331	.4878	.5068	.5126	.5009	-.0245
.040		-.0971	.4748					
.050	.0091			.3932	.4015	.4165	.4044	
.069								.0385
.080				.3478				
.081			.3667					
.086		.0359						
.094	.0086							
.151				.3224	.3407	.3509	.2829	
.157								-.0710
.163		.3672						
.177			.3091					
.229	.0090							
.245		.2555						
.[illegible]				.3087	.3021	.2941	.2258	
.274			.2963					
.345								.0176
.340		.2826						

AMES 11-073(OA148) -140A/B/C/R ORB LEFT WING BOT (XE8L59)

ALPHA (4) = 7.908 BETA (1) = -3.848

SECTION (1)LEFT WING BOT SURF DEPENDENT VARIABLE CP

2Y/BW	.2930	.3640	.4270	.5340	.6730	.7800	.8870	.9720
X/CW								
.400				.2663	.2727		.1834	
.402			.2899					
.503								-.0267
.550				.1758	.1611			
.565			-.6302					
.600							.0179	
.637		.1722						
.650						.0505		
.670								-.0378
.700					-.0517			
.725				-.0085				
.750						-.0368	-.0051	
.750			-.0702					
.775				.1521	.0592			
.788		-.0362						
.808			.0727					
.834	-.0646							
.839		-.0002						
.850				-.0751	-.1498	-.1560		
.857			-.0325					
.882								
.900	.0529							-.2938
.879		-.1305						
.900	-.0615			-.2105			-.2766	
.910			-.2130					
.919		-.1904						
.940				-.2933	-.2136	-.3054		
.943			-.2860					
.945		-.2252						
.960	-.1769							
1.000			.0047		-.1759		-.4651	

ALPHA (4) = 7.912 BETA (2) = .189 MACH = 1.0993 Q = 599.26 P = 708.35 RN/L = 3.1817

SECTION (1)LEFT WING BOT SURF DEPENDENT VARIABLE CP

2Y/BW	.2930	.3640	.4270	.5340	.6730	.7800	.8870	.9720
X/CW								
.010	-.3337	-.6350	.3222	.6117	.5755	.6041	.5745	
.020	.0000	-.3121	.4556	.5173	.5179	.5179	.5002	-.1659
.040		-.2340	.4561					
.050	-.0914			.4283	.4150	.4191	.4143	
.060								
.080				.3793				-.0725

AMES 11-073(OA148) -140A/B/C/R ORB LEFT WING 10. (XE8L59)

ALPHA (4) = 7.912 BETA (2) = .189

SECTION (1)LEFT WING BOT SURF DEPENDENT VARIABLE CP

2Y/BW	.2990	.3640	.4270	.5340	.6730	.7800	.8870	.9720
X/CW								
.081			.3805					
.096		.0137						
.094	-.0527							
.150				.3443	.3461	.3485	.2828	
.157								-.1026
.163		.3528						
.177			.3246					
.229	-.0264							
.246		.2851						
.250				.3129	.3063	.2902	.2157	
.274			.3075					
.345								-.0354
.390		.3040						
.400				.2693	.2653		.1653	
.402			.2893					
.573								-.0676
.540				.1769	.1543			
.565			-.7002					
.600							.0005	
.637		.1791						
.650						.0327		
.670								-.0763
.700					-.0388			
.725				.0008				
.750						-.0074	-.0184	
.760			-.0578					
.775				.1482	.0636			
.798		-.0294						
.808			.0779					
.834	-.0557							
.849		.0183						
.850				-.0757	-.1464	-.1391		
.857			-.0247					
.882								-.3455
.885	.0454							
.879		-.1135						
.900	-.0531			-.2129			-.2716	
[illegible]			-.2047					
.900		-.1723						
[illegible]				-.2972	-.2137	-.3049		
			-.2701					
[illegible]		-.2163						
.995	-.1839							
1.000			-.0135		-.0843		-.4955	

AMES 11-073(OA148) -140A/B/C/R ORB LEFT WING BOT (XEBL59)

ALPHA (4) = 7.911 BETA (3) = 4.247 MACH = 1.0993 Q = 599.26 P = 708.35 RN/L = 3.1817

SECTION (1)LEFT WING BOT SURF DEPENDENT VARIABLE CP

2Y/BW	.2990	.3640	.4270	.5340	.6730	.7800	.8870	.9720
X/CW								
.010	-.5534	-.4367	.1875	.5790	.5367	.5424	.5076	
.020	.0000	-.3482	.3433	.5170	.4981	.4900	.4574	-.3397
.040		-.2807	.4127					
.050	-.1943			.4360	.4119	.4008	.3825	
.069								-.2017
.080				.3856				
.081			.3881					
.086		-.0248						
.094	-.1311							
.150				.3345	.3382	.3297	.2560	
.157								-.1547
.163		.3312						
.177			.3426					
.194	-.0721							
.246		.2785						
[illegible]				.3013	.2908	.2773	.1892	
[illegible]			.3094					
.346								-.1081
.350		.2930						
.400				.2513	.2481		.1367	
.402			.2767					
.503								-.1364
.550				.1595	.1362			
.555			-.6281					
.600							-.0328	
.637		.1610						
.650						.0051		
.670								-.1467
.700					-.0438			
.725				-.0136				
.750						-.0260	-.0333	
.760			-.0580					
.775				.1317	.0563			
.798		-.0367						
.818			.0572					
.834	-.0662							
.839		.0037						
.850				-.0858	-.1590	-.1362		
.857			-.0414					
.862								-.3956
.875	.0234							
[illegible]		-.1268						
[illegible]	-.0593			-.2276			-.2719	
[illegible]			-.2050					
.919		-.1937						

AMES 11-073(OA148) 140A/B/C/R ORB LEFT WING BOT (XE8L59)

ALPHA (4) = 7.911 BETA (3) = 4.247

SECTION (1)LEFT WING BOT SURF DEPENDENT VARIABLE CP

2Y/BW	.2990	.3540	.4270	.5340	.6730	.7800	.8870	.9720
X/CW								
.050				-.3120	-.2598	-.3127		
.053			-.2733					
.055		-.2296						
.055	-.2173							
1.000			-.0870		-.0841		-.5670	

ALPHA (5) = 11.969 BETA (1) = -3.832 MACH = 1.0972 Q = 598.33 P = 710.00 RN/L = 3.1878

SECTION (1)LEFT WING BOT SURF DEPENDENT VARIABLE CP

2Y/BW	.2990	.3540	.4270	.5340	.6730	.7800	.8870	.9720
X/CW								
.010	-.2969	-.5770	.2277	.7398	.7374	.7269	.6803	
.020	.0000	-.2150	.4532	.6962	.7063	.7000	.6562	-.1982
.040		-.1257	.5548					
.050	.0106			.5996	.6140	.6073	.5798	
.069								-.0432
.080				.5412				
.081			.5106					
.096		.1965						
.094	.0573							
.150				.4787	.4984	.4989	.4260	
.157								-.0843
.163		.4681						
.177			.4499					
.209	.0798							
.216		.3954						
.250				.4286	.4315	.4226	.3444	
.274			.4167					
.345								.0557
.340		.3997						
.470				.3619	.3648		.2621	
.492			.3845					
.503								.0138
.500				.2544	.2357			
[illegible]			-.6761					
[illegible]							.0855	
.637		.2485						
.650						.1317		
.670								.0000
[illegible]					.0514			
.725				.0719				
[illegible]						.0816	.1254	
.750			-.0054					

AMES 11-073(OA148) -140A/B/C/R ORB LEFT WING BOT (XE8L59)

ALPHA (5) = 11.969 BETA (1) = -3.832

SECTION (1)LEFT WING BOT SURF DEPENDENT VARIABLE CP

2Y/BW	.2990	.3640	.4270	.5340	.6730	.7800	.8870	.9720
X/CW								
.775				.2732	.1344			
.799		.0307						
.808			.1803					
.834	-.0008							
.839		.0881						
.850				-.0192	-.0729	-.0526		
.857			.0378					
.882								-.2806
.885	.1227							
.890		-.0743						
.900	.0044			- 1424			-.2034	
.905			-.1657					
.913		-.1323						
.920				-.2281	-.1813	-.2380		
.953			-.2181					
.955		-.1970						
.960	-.1721							
1.000			-.1344		-.2444		-.5889	

ALPHA (5) = 11.872 BETA (2) = .197 MACH = 1.0972 Q = 598.33 P = 710.00 RN/L = 3.1878

SECTION (1)LEFT WING BOT SURF DEPENDENT VARIABLE CP

2Y/BW	.2990	.3640	.4270	.5340	.6730	.7800	.8870	.9720
X/CW								
.010	-.4932	-.6456	-.0013	.6631	.6681	.6350	.5877	
.020	.0000	-.3312	.2814	.6596	.6675	.6503	.5958	-.3430
.040		-.2469	.4629					
.050	-.0932			.5917	.5985	.5820	.5424	
.069								-.1556
.080				.5297				
.081			.4811					
.096		.0584						
.094	-.0248							
.150				.4685	.4916	.4881	.4022	
.157								-.1146
.163		.3911						
.177			.4581					
.223	.0375							
.245		.3719						
.250				.4259	.4224	.4078	.3229	
.294			.4169					
.345								.0018
.330		.3982						

AMES 11-073(OA148) -140A/B/C/R ORB LEFT WING BOT (XEBL59)

ALPHA (5) = 11.872 BETA (2) = .197

SECTION (1)LEFT WING BOT SURF DEPENDENT VARIABLE CP

2Y/BW	.2990	.3640	.4270	.5340	.6730	.7800	.8870	.9720
X/CW								
.400				.3585	.3581		.2376	
.402			.3807					
.403								-.0322
.500				.2514	.2280			
.565			-.7275					
.600							.0601	
.637		.2491						
.650						.1210		
.670								-.0502
.700					.0471			
.725				.0683				
.750						.0758	.1037	
.760			.0077					
.775				.2772	.1434			
.798		.0368						
.808			.1665					
.834	.0072							
.839		.0946						
.850				-.0142	-.0733	-.0461		
.857			.0404					
.862								-.3071
.865	.1159							
.879		-.0497						
.900	.0202			-.1489			-.1925	
.915			-.1496					
.919		-.1160						
.940				-.2450	-.1755	-.2463		
.943			-.2153					
.955		-.1802						
.965	-.1596							
1.000			-.0880		-.1745		-.6079	

ALPHA (5) = 11.855 BETA (3) = 4.258 MACH = 1.0972 Q = 598.33 P = 710.00 RN/L = 3.1878

SECTION (1)LEFT WING BOT SURF DEPENDENT VARIABLE CP

2Y/BW	.2990	.3640	.4270	.5340	.6730	.7800	.8870	.9720
X/CW								
.010	-.5420	-.5708	-.1400	.5743	.5772	.5173	.4699	
.020	.0000	-.4810	.1567	.6007	.5935	.5727	.5093	-.4750
.040		-.3597	.4007					
.060	-.1940			.5579	.5544	.5253	.4815	
.080								-.2727
.080				.5074				

AMES 11-073(OA148) -140A/B/C/R ORB LEFT WING BOT (XE8L59)

ALPHA (5) = 11.865 BETA (3) = 4.258

SECTION (1)LEFT WING BOT SURF DEPENDENT VARIABLE CP

2Y/BW	.2990	.3640	.4270	.5340	.6730	.7800	.8870	.9720
X/CW								
.081			.4550					
.096		-.0455						
.094	-.1018							
.150				.4473	.4582	.4488	.3585	
.157								-.1701
.163		.3284						
.177			.4398					
.229	-.0192							
.246		.3369						
.250				.3984	.3944	.3775	.2853	
.274			.4011					
.345								-.0759
.390		.3791						
.400				.3319	.3302		.1998	
.402			.3551					
.503								-.0987
.550				.2323	.2060			
.565			-.6911					
.600							.0273	
.637		.2298						
.650						.0961		
.670								-.1040
.700					.0332			
.725				.0498				
.750						.0642	.0725	
.760			-.0090					
.775				.2406	.1304			
.798		.0243						
.808			.1265					
.834	-.0128							
.839		.0779						
.850				-.0225	-.0961	-.0600		
.857			.0190					
.862								-.3541
.865	.0876							
.879		-.0554						
.900	.0088			-.1801			-.1992	
.905			-.1509					
.919		-.1218						
.940				-.2591	-.2073	-.2516		
.943			-.2202					
.955		-.1839						
.965	-.1716							
1.000			-.2601		-.1713		-.6312	

AMES 11-073(OA148) -140A/B/C/R ORB LEFT WING BOT (XE8L60) (05 AUG 75)

REFERENCE DATA

SREF = 2590.0000 SQ.FT. XMRP = 1076.6800 IN. XO
LREF = 474.8000 IN. YMRP = .0000 IN. YO
BREF = 936.0580 IN. ZMRP = 375.0000 IN. ZO
SCALE = .0300

PARAMETRIC DATA

RUDDER = 10.000 SPDBRK = 55.000
BDFLAP = 16.300 L-ELVN = 4.000
R-ELVN = -4.000 MACH = .900

ALPHA (1) = -4.026 BETA (1) = -3.841 MACH = .89803 Q = 598.77 P = 1060.7 RN/L = 3.5631

SECTION (1)LEFT WING BOT SURF DEPENDENT VARIABLE CP

2Y/BW	.2990	.3640	.4270	.5340	.6730	.7800	.8870	.9720
X/CW								
.010	-.1327	-.2952	-.5114	-1.0878	-1.2515	-1.0275	-1.0381	
.020	.0000	-.2597	-.5432	-1.2643	-1.3201	-1.3289	-1.3472	-1.2231
.040		-.2334	-.6533					
.050	-.1312			-1.1584	-1.3182	-1.3656	-1.3768	
.069								-1.0608
.080				-1.0697				
.081			-.4828					
.095		-.1200						
.094	-.1210							
.150				-.6182	-1.1392	-1.2206	-1.2463	
.157								-.5065
.163		-.1742						
.177			-.4754					
.223	-.0559							
.246		-.3214						
.250				-.3979	-.4657	-.9118	-1.1358	
.274			-.3619					
.345								-.5071
.390		-.3321						
.400				-.2583	-.2660		-.3977	
.402			-.2432					
.503								-.4351
.500				-.3052	-.2438			
.545			-.7698					
.600							-.1856	
.637		-.2831						
.650						-.2107		
.670								-.3039
.710					-.2495			
.725				-.2632				
.750						-.2449	-.1671	
.760			-.2342					
.775				-.1493	-.1440			
.790		-.2057						
.803			-.1763					
.834	-.2260							
.833		-.2209						
.850				-.2331	-.1991	-.2493		

AMES 11-073(OA148) -140A/B/C/R ORB LEFT WING BOT (XEBL60)

ALPHA (1) = -4.026 BETA (1) = -3.841

SECTION (1)LEFT WING BOT SURF DEPENDENT VARIABLE CP

2Y/BW	.2990	.3640	.4270	.5340	.6730	.7800	.8870	.9720
X/CW								
.857			.2403					
.862								-.2079
.865	-.1772							
.879		-.2424						
.900	-.2075			-.1632			-.1271	
.905			-.1799					
.919		-.1437						
.950				-.0326	-.0529	-.0179		
.953			-.0363					
.955		-.0420						
.985	-.0196							
1.000			.1038		.0559		.0726	

ALPHA (1) = -4.026 BETA (2) = .202 MACH = .89803 Q = 598.77 P = 1060.7 RN/L = 3.5531

SECTION (1)LEFT WING BOT SURF DEPENDENT VARIABLE CP

2Y/BW	.2990	.3640	.4270	.5340	.6730	.7800	.8870	.9720
X/CW								
.010	-.0480	-.1255	-.3795	-1.0845	-1.2873	-1.0732	-1.1053	
.020	.0000	-.1029	-.3842	-1.2455	-1.3410	-1.3685	-1.1145	-.6568
.040		-.0842	-.4867					
.060	-.0582			-1.1232	-1.2672	-1.2967	-1.1280	
.069								-.5881
.080				-.7198				
.081			-.3982					
.086		-.0333						
.094	-.0586							
.150				-.5122	-.6881	-1.0032	-.9362	
.157								-.3589
.163		-.0965						
.177			-.4075					
.223	-.0131							
.246		-.2564						
.250				-.3623	-.4049	-.6442	-.8032	
.274			-.3168					
.345								-.4171
.350		-.2901						
.400				-.2559	-.2731		-.5893	
.4[illegible]			-.2343					
.4[illegible]								-.3669
.500				-.3104	-.2968			
.5[illegible]			-.6988					
.600							-.3255	

AMES 11-073(QA148) -140A/B/C/R ORB LEFT WING BOT (XE8L60)

ALPHA (1) = -4.026 BETA (2) = .202

SECTION (1)LEFT WING BOT SURF DEPENDENT VARIABLE CP

2Y/BW	.2930	.3540	.4270	.5340	.6730	.7800	.8870	.9720
X/CW								
.637		-.2927						
.650								
.670						-.2922		
.700								-.2721
.725					-.3648			
.750				-.3678				
.760						-.2472	-.2196	
.775			-.3024					
.790				-.1512	-.1532			
.800		-.2501						
.820			-.1992					
.840	-.2844							
.860		-.2224						
.870				-.2449	-.2293	-.2701		
.880			-.2473					
.890								
.895	-.1930							-.1760
.900		-.2414						
.910	-.2261							
.915				-.1676			-.1210	
.919			-.1790					
.930		-.1490						
.950				-.0292	-.0418	-.0413		
.953			-.0350					
.955		-.0488						
.965	-.0271							
1.000			.0844		.0757		.0039	

ALPHA (1) = -3.994 BETA (3) = 4.285 MACH = .89803 Q = 598.77 P = 1060.7 RN/L = 3.5631

SECTION (1)LEFT WING BOT SURF DEPENDENT VARIABLE CP

2Y/BW	.2930	.3540	.4270	.5340	.6730	.7800	.8870	.9720
X/CW								
.010	.0063	-.0078	-.1655	-1.0418	-1.2878	-1.0598	-.9375	
.020	.0000	.0021	-.2273	-1.1034	-1.3124	-1.1454	-.9340	-.6080
.040		.0152	-.3152					
.050	-.0128							
.060				-.7054	-1.2394	-1.1238	-.8496	
.080				-.5407				-.5983
.090			-.3100					
.095		.0324						
.100	-.0169							
.140				-.4300	-.5053	-.9112	-.8384	
.165		-.0836						-.3709

AMES 11-073(OA148) -140A/B/C/R ORB LEFT WING BOT (XEBL60)

ALPHA (1) = -3.984 BETA (3) = 4.285

SECTION (1)LEFT WING BOT SURF DEPENDENT VARIABLE CP

2Y/BW	.2930	.3640	.4270	.5340	.6730	.7800	.8870	.9720
X/CW								
.177			-.3136					
.229	.0160							
.246		-.2037						
.250				-.3252	-.3501	-.5631	-.7461	
.274			-.2825					
.345								.4395
.390		-.2422						
.400				-.2510	-.2633		-.5294	
.412			-.2233					
.503								.3415
.550				-.3088	-.3629			
.555			-.7493					
.600							-.3146	
.627		-.2892						
.651						-.3232		
.675								-.2383
[illegible]					-.4351			
.705				-.4102				
[illegible]						-.2062	-.2045	
[illegible]			-.3591					
[illegible]				-.1832	-.1677			
[illegible]		-.2772						
[illegible]			-.2137					
[illegible]	-.2[illegible]9							
[illegible]		-.2356						
[illegible]				-.2495	-.2555	-.3467		
[illegible]			-.2300					
[illegible]								-.1279
[illegible]	-.2727							
[illegible]		-.2349						
[illegible]	-.2318			-.1746			-.1234	
[illegible]			-.1696					
.810		-.1529						
.850				-.0396	-.0291	-.0560		
.852			-.0431					
[illegible]		-.0571						
.910	-.0451							
1.000			.0592		.0192		.0728	

AMES 11-073(OA148) -140A/B/C/R ORB LEFT WING BOT (XE8L60)

ALPHA (2) = .056 BETA (1) = -3.856 MACH = .89813 Q = 598.75 P = 1060.5 RN/L = 3.5631

SECTION (1)LEFT WING BOT SURF DEPENDENT VARIABLE CP

2Y B/2	.2930	.3640	.4270	.5340	.6730	.7800	.8870	.9720
X/CW								
.010	.0359	.0883	.0981	-.6532	-.8263	-.7558	-.6211	
.020	.0000	.0748	-.0083	-.6144	-.7416	-.7594	-.9141	-.3072
.040		.0826	-.1686					
.060	.0049			-.5266	-.5919	-.6798	-.7464	
.069								-.3559
.080				-.3515				
.091			-.2043					
.096		.0940						
.094	-.0102							
.150				-.2180	-.2275	-.2575	-.2606	
.157								-.2426
.163		.0224						
.177			-.1830					
.229	.0269							
.245		-.1319						
.250				-.1533	-.2029	-.2386	-.2712	
.274			-.1274					
.345								-.2838
.330		-.1045						
.400				-.1313	-.1417		-.2041	
.402			-.0881					
.503								-.3357
.550				-.2012	-.2166			
.555			-.8425					
.600							-.3291	
.637		-.1931						
.650						-.3119		
.670								-.2363
.700					-.3530			
.725				-.3350				
.750						-.2176	-.2168	
.760			-.2417					
.775				-.1178	-.1237			
.799		-.2084						
.818			-.1735					
.834	-.2378							
.874		-.3135						
.900				-.2550	-.1913	-.3012		
.957			-.2529					
[illegible]								-.1557
[illegible]	-.1617							
[illegible]		-.2729						
[illegible]	-.2745			-.1692			-.1209	
[illegible]			-.1759					
.919		-.1467						

AMES 11-073(OA148) -140A/B/C/R ORB LEFT WING BOT (XE8L60)

ALPHA (2) = .056 BETA (1) = -3.856

SECTION (1)LEFT WING BOT SURF DEPENDENT VARIABLE CP

2Y/BW	.2990	.3640	.4270	.5340	.6730	.7800	.8870	.9720
X/CW								
.950				-.0183	-.0693	.0113		
.953			-.0182					
.955		-.0417						
.965	-.0180							
1.000			.1085		.0653		.1142	

ALPHA (2) = .056 BETA (2) = .186 MACH = .99813 Q = 598.75 P = 1060.5 RN/L = 3.5631

SECTION (1)LEFT WING BOT SURF DEPENDENT VARIABLE CP

2Y/BW	.2990	.3640	.4270	.5340	.6730	.7800	.8870	.9720
X/CW								
.010	.0309	.1062	.1801	-.4866	-.6539	-.7129	-.6186	
.020	.0000	.1048	.1003	-.4760	-.5860	-.6397	-.7907	-.3251
.040		.1211	-.0625					
.050	.0190			-.3655	-.4720	-.5579	-.6648	
.059								-.3249
.080				-.2616				
.101			-.1284					
[illegible]		.131[illegible]						
[illegible]	.0085							
[illegible]				-.1922	-.2101	-.2301	-.3270	
[illegible]								-.2613
[illegible]		.0750						
[illegible]			-.1428					
[illegible]	.0412							
[illegible]		-.0913						
[illegible]				-.1404	-.1933	-.2239	-.2696	
[illegible]			-.1149					
[illegible]								-.3088
[illegible]		-.0894						
[illegible]				-.1343	-.1532		-.2192	
[illegible]			-.0924					
[illegible]								-.3711
[illegible]				-.2144	-.2233			
[illegible]			-.0355					
[illegible]							-.3534	
[illegible]		-.1963						
[illegible]						-.3305		
[illegible]								-.2337
[illegible]					-.3946			
[illegible]				-.3562				
[illegible]						-.2393	-.2187	
[illegible]			-.3004					

AMES 11-073(OA148) -140A/B/C/R ORB LEFT WING BOT (XEBL60)

ALPHA (2) = .056 BETA (2) = .186

SECTION (1)LEFT WING BOT SURF DEPENDENT VARIABLE CP

2Y/BW	.2990	.3640	.4270	.5340	.6730	.7800	.8870	.9720
X/CW								
.775				-.1553	-.1414			
.798		-.2510						
.809			-.1817					
.834	-.2557							
.839		-.2230						
.850				-.2715	-.2080	-.3019		
.857			-.2698					
.862								-.1211
.866	-.1707							
.879		-.3032						
.900	-.2547			-.1752			-.1105	
.905			-.1928					
.919		-.1645						
.950				-.0251	-.0577	.0092		
.963			-.0374					
.966		-.0554						
.975	-.0399							
1.000			.0986		.0777		.1213	

ALPHA (2) = .048 BETA (3) = 4.260 MACH = .89813 Q = 598.75 P = 1060.5 RN/L = 3.5631

SECTION (1)LEFT WING BOT SURF DEPENDENT VARIABLE CP

2Y/BW	.2990	.3640	.4270	.5340	.6730	.7800	.8870	.9720
X/CW								
.010	-.0098	.0870	.2245	-.3016	-.5097	-.5714	-.5471	
.020	.0000	.1076	.1629	-.3553	-.4177	-.4976	-.6324	-.2989
.040		.1223	.0224					
.050	.0101			-.2530	-.3622	-.4222	-.4811	
.069								-.3202
.080				-.2097				
.081			-.0684					
.086		.1438						
.094	.0139							
.151				-.1550	-.1770	-.2148	-.3060	
.157								
.163		.1055						-.2625
.177			-.1020					
.189	.0460							
.240		-.0509						
.255				-.1281	-.1737	-.2133	-.2651	
.274			-.0923					
.345								
.340		-.0727						-.3414

AMES 11-073(OA148) -140A/B/C/R ORB LEFT WING BOT (XE8L60)

ALPHA (2) = .048 BETA (3) = 4.260

SECTION (1)LEFT WING BOT SURF DEPENDENT VARIABLE CP

2Y/BW	.2990	.3640	.4270	.5340	.6730	.7800	.8870	.9720
X/CW								
.400				-.1307	-.1552		-.2281	
.402			-.0854					
.503								-.4034
.550				-.2182	-.2436			
.555			-.8469					
.600							-.3873	
.637		-.1996						
.650						-.3540		
.670								-.2449
.700					-.4144			
.725				-.3494				
.750						-.2259	-.2217	
.750			-.3126					
.775				-.1707	-.1554			
.799		-.2545						
.808			-.2074					
.834	-.2662							
.839		-.2281						
.850				-.3337	-.2869	-.3671		
.857			-.3081					
.882								-.1100
.855	-.2122							
.879		-.3119						
.900	-.2636			-.2020			-.1209	
.905			-.2219					
.919		-.1943						
.950				-.0490	-.0363	-.0106		
.953			-.0731					
.955		-.0882						
.965	-.0598							
1.000			.0595		.0720		.1223	

ALPHA (3) = 3.975 BETA (1) = -3.861 MACH = .89723 Q = 597.99 P = 1061.2 RN/L = 3.5607

SECTION (1)LEFT WING BOT SURF DEPENDENT VARIABLE CP

2Y/BW	.2990	.3640	.4270	.5340	.6730	.7800	.8870	.9720
X/CW								
.010	.0187	.1156	.3955	.1054	.0295	.1223	.1463	
.020	.0030	.1648	.3398	-.0275	-.0068	-.0024	-.0115	-.1052
.040		.1917	.1610					
.050	.0568			-.0365	-.0533	-.0458	-.0554	
.069								-.1616
.080				-.0318				

DATE 10 FEB 76 TABULATED PRESSURE DATA - OA148 (AMES 11-073-1) (XE8L60)

AMES 11-073(OA148) -140A/B/C/R ORB LEFT WING BOT

ALPHA (3) = 3.975 BETA (1) = -3.861

SECTION (1)LEFT WING BOT SURF DEPENDENT VARIABLE CP

2Y/BW	.2990	.3640	.4270	.5340	.6730	.7800	.8870	.9720
X/CW								
.081			.0615					
.086		.2260						
.094	.0562			.0012	-.0073	-.0148	-.0782	
.150								-.1838
.157								
.163		.1936						
.177			.0192					
.223	.0964							
.246		.0354						
.250				.0060	-.0253	-.0465	-.1017	
.274			.0187					-.2284
.345								
.390		.0264						
.400				-.0222	-.0291		-.1208	
.402			.0168					-.2992
.503								
.550				-.1217	-.1397			
.565			-.0999					
.600							-.2738	
.637		-.1164						
.650						-.2605		
.670								-.2422
.700					-.2846			
.725				-.2033				
.750						-.2286	-.1433	
.760			-.1759					
.775				-.0543	-.0911			
.792		-.1501						
.809			-.1579					
.834	-.1791							
.839		-.2144						
.850				-.3497	-.3512	-.4201		
.857			-.3049					-.4240
.852								
.865	-.1408							
.879		-.3777						
.900	-.2809			-.2569			-.5845	
.905			-.2507					
.919		-.1694						
.940				-.0489	-.1117	-.2946		
.943			-.0386					
.955		-.0494						
.965	-.0373							
[illegible]			.1177		.0793		-.0179	

AMES 11-073(OA148) -140A/B/C/R ORB LEF. WING BOT (XE6L60)

ALPHA (3) = 4.019 BETA (2) = .193 MACH = .89723 Q = 597.99 P = 1061.2 RN/L = 3.5607

SECTION (1)LEFT WING BOT SURF DEPENDENT VARIABLE CP

2Y/BW	.2990	.3640	.4270	.5340	.6730	.7800	.8870	.972[illegible]
X/CW								
.010	-.0668	-.0024	.3664	.1839	.0869	.1554	.1495	
.020	.0000	.0890	.3425	.0602	.0542	.0354	.0091	-.2114
.040		.1319	.2073					
.050	.0217			.0255	-.0223	-.0222	-.0427	
.069								-.2382
.080				.0064				
.081			.0994					
.095		.2129						
.094	.0413							
.150				.0149	-.0002	-.0158	-.0869	
.157								-.2223
.163		.2102						
.177			.0440					
.229	.0941							
.246		.0559						
.250				.0100	-.0263	-.0552	-.1234	
.274			.0288					
.345								-.2926
.300		.0336						
.400				-.0251	-.0413		-.1453	
.402			.0117					
.503								-.3457
.550				-.1285	-.1579			
.565			-.9155					
.600							-.3131	
.637		-.1234						
.650						-.2932		
.670								-.2665
.700					-.3330			
.725				-.2252				
.750						-.2382	-.1770	
.760			-.1988					
.775				-.0702	-.1053			
.788		-.1613						
.808			-.1580					
.834	-.1932							
.839		-.2047						
.850				-.3537	-.3584	-.4179		
.857			-.3091					
.862								-.4242
.865	-.1465							
.879		-.3603						
.900	-.2716			-.3371			-.5844	
[illegible]			-.2659					
.919		-.2035						

AMES 11-073(OA148) -140A/B/C/R ORB LEFT WING BOT (XEBL60)

ALPHA (3) = 4.019 BETA (2) = .193

SECTION (1)LEFT WING BOT SURF DEPENDENT VARIABLE CP

2Y/BW	.2990	.3540	.4270	.5340	.6730	.7800	.8870	.9720
X/CW								
.950				-.0569	-.0877	-.2283		
.953			-.0608					
.955		-.0702						
.955	-.0594							
1.000			.0947		.0904		-.0665	

ALPHA (3) = 3.944 BETA (3) = 4.252 MACH = .89723 Q = 597.99 P = 1061.2 RN/L = 3.5607

SECTION (1)LEFT WING BOT SURF DEPENDENT VARIABLE CP

2Y/BW	.2990	.3540	.4270	.5340	.6730	.7800	.8870	.9720
X/CW								
.010	-.2035	-.1530	.2977	.2393	.1423	.1939	.1812	
.020	.0000	-.0095	.3164	.1261	.0977	.0874	.0562	-.3502
.040		.0444	.2278					
.050	-.0339			.0780	.0249	.0153	-.0133	
.069								-.3132
.080				.0450				
.081			.1273					
.086		.1728						
.094	.0071							
.150				.0306	.0099	-.0053	-.0870	
.157								-.2646
.163		.2149						
.177			.0588					
.229	.0701							
.246		.0676						
.250				.0104	-.0200	-.0383	-.1299	
.274			.0309					
.345								-.3322
.350		.0411						
.400				-.0349	-.0447		-.1581	
.402			.0074					
.503								-.3394
.550				-.1346	-.1552			
.575			-.9350					
.600							-.3026	
.657		-.1204						
.650						-.2991		
.670								-.3026
.700					-.2949			
.725				-.2339				
.750						-.2448	-.2018	
.750			-.2122					

AMES 11-073(OA148) -140A/B/C/R ORB LEFT WING BOT (XE8L68)

ALPHA (3) = 3.944 BETA (3) = 4.252

SECTION (1)LEFT WING BOT SURF DEPENDENT VARIABLE CP

2Y/BW	.2990	.3640	.4270	.5340	.6730	.7800	.8870	.9720
X/CW								
.775				-.0705	-.1163			
.798		-.1784						
.808			-.1731					
.834	-.2123							
.839		-.2104						
.850				-.3479	-.3293	-.4067		
.857			-.3134					
.862								-.3538
.865	-.1730							
.879		-.3458						
.900	-.2911			-.3087			-.5696	
.905			-.3001					
.913		-.2587						
.950				-.0935	-.0776	-.0774		
.953			-.0928					
.965		-.1034						
.965	-.0802							
1.000			.0648		.0628		-.0173	

ALPHA (4) = 8.020 BETA (1) = -3.857 MACH = .89903 Q = 599.30 P = 1059.3 RN/L = 3.5654

SECTION (1)LEFT WING BOT SURF DEPENDENT VARIABLE CP

2Y/BW	.2990	.3640	.4270	.5340	.6730	.7800	.8870	.9720
X/CW								
.010	-.1743	-.1870	.4063	.4995	.4498	.5064	.4681	
.020	.0000	.0473	.4620	.3769	.3849	.3850	.3557	-.2820
.040		.1197	.3783					
.050	.0390			.2732	.2734	.2705	.2445	
.069								-.2062
.090				.2190				
.091			.2667					
.096		.2809						
.094	.0794							
.150				.1825	.1853	.1845	.1047	
.157								-.1981
.163		.3246						
.177			.1881					
.229	.1544							
.246		.1812						
.250				.1512	.1341	.1061	.0376	
.274			.1551					
.295								-.1979
.390		.1460						

AMES 11-073(OA148) -140A/B/C/R ORB LEFT WING BOT (XE8L60)

ALPHA (4) = 8.020 BETA (1) = -3.857

SECTION (1)LEFT WING BOT SURF DEPENDENT VARIABLE CP

2Y/BW	.2990	.3540	.4270	.5340	.6730	.7800	.8870	.9720
X/CW								
.400				.0877	.0824		-.0278	
.402			.1182					
.503								-.2334
.550				-.0319	-.0585			
.565			-.6410					
.600							-.2064	
.637		-.0317						
.650						-.1680		
.670								-.2489
.700					-.2330			
.725				-.1610				
.750						-.2154	-.1467	
.760			-.1607					
.775				-.0160	-.1114			
.799		-.1234						
.809			-.1278					
.834	-.1606							
.839		-.1934						
.850				-.3393	-.3857	-.3978		
.857			-.2841					
.862								-.4280
.865	-.1175							
.879		-.3987						
.900	-.3007			-.4812			-.5523	
.905			-.5043					
.919		-.3402						
.940				-.2621	-.4405	-.5952		
.954			-.1036					
.965		-.0994						
.965	-.0697							
1.000			.0888		-.0715		-.3554	

ALPHA (4) = 8.029 BETA (2) = .194 MACH = .89903 Q = 599.30 P = 1059.3 RN/1 = 3.5654

SECTION (1)LEFT WING BOT SURF DEPENDENT VARIABLE CP

2Y/BW	.2990	.3540	.4270	.5340	.6730	.7800	.8870	.9720
X/CW								
.010	-.3729	-.3915	.2656	.4929	.4334	.4659	.4164	
.020	.0000	-.0957	.3781	.3941	.3773	.3695	.3296	-.4227
.040		-.0112	.3534					
.050	-.3407			.2937	.2651	.2620	.2274	
.069								-.2926
.080				.2406				

AMES 11-073(OA148) -140A/B/C/R ORB LEFT WING BOT (XE8L60)

ALPHA (4) = 8.028 BETA (2) = .194

SECTION (11)LEFT WING BOT SURF DEPENDENT VARIABLE CP

2Y/BW	.2990	.3640	.4270	.5340	.6730	.7800	.8870	.9720
X/CW								
.031			.2694					
.095		.2154						
.094	.0295							
.150				.1836	.1788	.1724	.0814	
.157								-.2092
.163		.3125						
.177			.1919					
.229	.1245							
.246		.1804						
.250				.1414	.1264	.1027	.0131	
.274			.1520					
.345								-.1949
.390		.1482						
.400				.0771	.0696		-.0483	
.422			.1096					
.500								-.2409
.540				-.0402	-.0598			
.565			-.6500					
.600							-.2073	
.637		-.0318						
.650						-.1764		
.670								-.2992
.700					-.2309			
.725				-.1707				
.750						-.2219	-.1644	
.760			-.1632					
.775				-.0283	-.1268			
.798		-.1283						
.809			-.1317					
.834	-.1694							
.839		-.1859						
.850				-.3368	-.3861	-.3910		
.857			-.2911					
.862								-.5259
.865	-.1293							
.879		-.3811						
.900	-.2971			-.4892			-.5621	
.905			-.4896					
.919		-.3548						
.930				-.2500	-.4107	-.5953		
.943			-.1160					
.955		-.1202						
.965	-.0862							
1.000			.0763		-.0252		-.4312	

AMES 11-073(OA148) -140A/B/C/R ORB LEFT WING BOT (XE8L60)

ALPHA (4) = 8.024 BETA (3) = 4.248 MACH = .89903 Q = 599.30 P = 1059.3 RN/L = 3.5654

SECTION (1)LEFT WING BOT SURF DEPENDENT VARIABLE CP

2Y/BW	.2990	.3640	.4270	.5340	.6730	.7800	.8870	.9720
X/CW								
.010	-.5275	-.3416	.0896	.4459	.3988	.4012	.3482	
.020	.0000	-.1683	.2600	.3827	.3542	.3468	.3011	-.5242
.040		-.0914	.3171					
.050	-.1293			.2923	.2665	.2509	.2215	
.069								-.4001
.080				.2348				
.081			.2560					
.086		.1444						
.094	-.0327							
.150				.1780	.1781	.1581	.0661	
.157								-.2556
.163		.2756						
.177			.1899					
.229	.0863							
.246		.1654						
.250				.1313	.1148	.0885	-.0026	
.274			.1465					
.345								-.2291
.390		.1491						
.400				.0657	.0542		-.0713	
.402			.0960					
.503								-.2863
.550				-.0458	-.0735			
.565			-.6711					
.600							-.2414	
.647		-.0282						
.650						-.1919		
.670								-.3383
.700					-.2356			
.725				-.1711				
.750						-.2380	-.1959	
.760			-.1582					
.775				-.0472	-.1501			
.798		-.1419						
.809			-.1392					
.834	-.1751							
.839		-.1910						
.850				-.3463	-.4062	-.3978		
.857			-.3006					
.862								-.5908
.865	-.1429							
.879		-.3703						
.900	-.2994			-.5085			-.5521	
.905			-.4461					
.919		-.3410						

AMES 11-073(OA148) -140A/B/C/R ORB LEFT WING BOT (XE8L60)

ALPHA (4) = 8.024 BETA (3) = 4.248

SECTION (1)LEFT WING BOT SURF DEPENDENT VARIABLE CP

2Y/BW	.2990	.3640	.4270	.5340	.6730	.7800	.8870	.9720
X/CW								
.950				-.1996	-.3623	-.5927		
.953			-.1248					
.955		-.1403						
.965	-.1108							
1.000			.0515		-.0070		-.4797	

ALPHA (5) = 11.919 BETA (1) = -3.839 MACH = .89963 Q = 599.94 P = 1059.0 RN/L = 3.5645

SECTION (1)LEFT WING BOT SURF DEPENDENT VARIABLE CP

2Y/BW	.2990	.3640	.4270	.5340	.6730	.7800	.8870	.9720
X/CW								
.010	-.4774	-.5664	.2028	.6253	.6041	.5826	.5268	
.020	.0000	-.1433	.4120	.5726	.5639	.5573	.5018	-.3857
.040		-.0334	.4817					
.050	-.0178			.4697	.4562	.4543	.4160	
.069								
.080				.4003				-.2295
.081			.4060					
.086		.2757						
.094	.0704							
.150				.3315	.3380	.3321	.2487	
.157								
.163		.4129						-.1930
.177			.3177					
.229	.1965							
.246		.2949						
.250				.2655	.2601	.2412	.1600	
.274			.2674					
.345								
.390		.2513						-.1132
.400				.1871	.1824		.0764	
.402			.2114					
.503								
.550				.0620	.0387			-.1715
.565			-.5958					
.600								
.637		.0491					-.1068	
.650						-.0871		
.670								
.700								-.2581
.725					-.1564			
.750				-.1103				
.760						-.1782	-.1144	
			-.1319					

AMES 11-073(OA148) -140A/B/C/R ORB LEFT WING BOT (XEBL60)

ALPHA (5) = 11.919 BETA (1) = -3.839

SECTION (1)LEFT WING BOT SURF DEPENDENT VARIABLE CP

2Y/BW	.2990	.3640	.4270	.5340	.6730	.7800	.8870	.9720
X/CW								
.775				.0381	-.0946			
.798		-.0937						
.808			-.0799					
.834	-.1403							
.839		-.1635						
.850				-.2850	-.3643	-.3628		
.857			-.2435					
.862								
.865	-.0945							-.4970
.879		-.3841						
.900	-.2943			-.4566			-.5039	
.905			-.4752					
.919		-.4102						
.950				-.5821	-.4546	-.5626		
.953			-.4697					
.955		-.2609						
.965	-.1445							
1.000			-.0291		-.3248		-.5396	

ALPHA (5) = 11.929 BETA (2) = .180 MACH = .89963 Q = 599.94 P = 1059.0 RN/L = 3.5645

SECTION (1)LEFT WING BOT SURF DEPENDENT VARIABLE CP

2Y/BW	.2990	.3640	.4270	.5340	.6730	.7800	.8870	.9720
X/CW								
.010	-.6844	-.4195	-.0053	.5436	.5208	.4742	.4150	
.020	.0000	-.2139	.2569	.5253	.5108	.4918	.4299	-.5512
.040		-.1164	.4088					
.050	-.1221			.4479	.4386	.4126	.3659	
.069								
.080								-.3712
.081				.3863				
.086			.3797					
.094		.1879						
.150	.0038							
.157				.3135	.3161	.3050	.2055	
.163								-.2553
.177		.3684						
.229	.1632		.3102					
.246								
.250		.2725						
.274				.2519	.2389	.2161	.1225	
.3[illegible]			.2576					
.390		.2421						-.1873

AMES 11-073(OA148) -140A/B/C/R ORB LEFT WING BOT (XEBL60)

ALPHA (5) = 11.929 BETA (2) = .180

SECTION (1)LEFT WING BOT SURF DEPENDENT VARIABLE CP

2Y/BW	.2990	.3640	.4270	.5340	.6730	.7800	.8870	.9720
X/CW								
.400				.1663	.1587		.0327	
.402			.2007					
.503								-.2394
.550				.0433	.0198			
.565			-.6052					
.600							-.1420	
.637		.0458						
.650						-.1022		
.670								-.3096
.700					-.1561			
.725				-.1203				
.750						-.1947	-.1465	
.760			-.1324					
.775				.0229	-.1097			
.798		-.0976						
.808			-.0909					
.834	-.1372							
.839		-.1557						
.850				-.3012	-.3745	-.3677		
.857			-.2514					
.862								-.5593
.865	-.1000							
.879		-.3632						
.900	-.2860			-.4611			-.5161	
.905			-.4601					
.919		-.4181						
.950				-.5654	-.4601	-.5666		
.953			-.4781					
.965		-.2575						
.965	-.1862							
1.000			-.0530		-.2737		-.5587	

ALPHA (5) = 11.915 BETA (3) = 4.268 MACH = .89963 Q = 599.94 P = 1059.0 RN/L = 3.5645

SECTION (1)LEFT WING BOT SURF DEPENDENT VARIABLE CP

2Y/BW	.2990	.3640	.4270	.5340	.6730	.7800	.8870	.9720
X/CW								
.010	-.7927	-.3888	-.2190	.4307	.4223	.3500	.2896	
.020	.0000	-.3129	.0833	.4570	.4456	.4199	.3495	-.7094
.040		-.2247	.3150					
.050	-.2200			.4079	.4007	.3688	.3194	
.069								-.4965
.080				.3510				

AMES 11-073(OA148) -140A/B/C/R ORB LEFT WING BOT (XE8L60)

ALPHA (5) = 11.915 BETA (3) = 4.268

SECTION (1)LEFT WING BOT SURF DEPENDENT VARIABLE CP

2Y/BW	.2990	.3640	.4270	.5340	.6730	.7800	.8870	.9720
X/CW								
.081			.3303					
.086		.1013						
.094	-.0623							
.150				.2834	.2931	.2780	.1764	
.157								-.3058
.163		.3106						
.177			.2888					
.229	.1043							
.246		.2399						
.250				.2290	.2161	.1874	.0954	
.274			.2407					
.345								-.2356
.390		.2266						
.400				.1479	.1402		.0036	
.402			.1819					
.505								-.2748
.550				.0337	-.0001			
.565			-.5632					
.600							-.1795	
.637		.0398						
.650						-.1330		
.670								-.3460
.700					-.1798			
.725				-.1337				
.750						-.2238	-.1904	
.760			-.1424					
.775				.0076	-.1409			
.798		-.1189						
.808			-.1024					
.834	-.1577							
.839		-.1551						
.850				-.3164	-.4026	-.3774		
.857			-.2671					
.862								-.6089
.855	-.1047							
.879		-.3595						
.900	-.2768			-.4891			-.5287	
.905			-.4459					
.919		-.4284						
.950				-.5722	-.4856	-.5738		
.953			-.4383					
.955		-.3306						
.[illegible]	-.2093							
1.000			-.0765		-.2597		-.6015	

AMES 11-073(OA148) -140A/B/C/R ORB LEFT WING BOT (XEBLB1) (05 AUG 75)

REFERENCE DATA

SREF = 2690.0000 SQ.FT. XMRP = 1076.6800 IN. XO
LREF = 474.8000 IN. YMRP = .0000 IN. YO
BREF = 936.0000 IN. ZMRP = 375.0000 IN. ZO
SCALE = .0300

PARAMETRIC DATA

RUDDER = 10.000 SPDBRK = 55.000
BDFLAP = 16.300 L-ELVN = 4.000
R-ELVN = -4.000 MACH = .600

ALPHA (1) = -4.014 BETA (1) = -7.854 MACH = .59638 Q = 594.21 P = 2386.5 RN/L = 4.8411

SECTION (1)LEFT WING BOT SURF DEPENDENT VARIABLE CP

2Y/BW	.2990	.3640	.4270	.5340	.6730	.7800	.8870	.9720
X/CW								
.010	-.2935	-.6562	-1.0863	-2.1473	-2.0130	-1.7060	-1.7100	
.020	.0000	-.5851	-1.1524	-1.9860	-1.8911	-1.4031	-1.6185	-.9392
.040		-.5341	-.9833					
.050	-.2476			-.9428	-1.0848	-1.1427	-1.1116	
.069								
.080				-.7094				-.8052
.081			-.6178					
.085		-.3383						
.094	-.2266							
.150				-.4510	-.4764	-.5432	-.5049	
.157								
.163		-.3908						-.3274
.177			-.3784					
.223	-.1816							
.245		-.3709						
.250				-.2987	-.3360	-.3612	-.3514	
.274			-.2719					
.345								
.300		-.2395						-.3165
.400				-.2059	-.2126		-.2416	
.400			-.1817					
.503								
.500				-.2042	-.2041			-.3019
.565			-.2083					
.600							-.2210	
.637		-.2036						
.650						-.1992		
.670								-.2645
.700					-.1878			
.725				-.1620				
.750						-.2207	-.2062	
.760			-.1639					
.775				-.1534	-.1380			
.798		-.1368						
.808			-.1760					
.834	-.1574							
.839		-.2025						
.850				-.1911	-.1616	-.1906		

AMES 11-073(OA148) -140A/B/C/R ORB LEFT WING BOT (XEBL61)

ALPHA (1) = -4.014 BETA (1) = -7.854

SECTION (1)LEFT WING BOT SURF DEPENDENT VARIABLE CP

2Y/BW	.2990	.3640	.4270	.5340	.6730	.7800	.8870	.9720
X/CW								
.857			-.1881					
.862								
.855	-.1714							-.2177
.879		-.1944						
.900	-.1678			-.1579			-.1338	
.905			-.1584					
.919		-.1468						
.950				-.0679	-.0960	-.0523		
.953			-.0662					
.955		-.0812						
.955	-.0454							
1.000			.0483		-.0103		.0461	

ALPHA (1) = -3.998 BETA (2) = -3.832 MACH = .59638 Q = 594.21 P = 2386.5 RN/L = 4.8411

SECTION (1)LEFT WING BOT SURF DEPENDENT VARIABLE CP

2Y/BW	.2990	.3640	.4270	.5340	.6730	.7800	.8870	.9720
X/CW								
.010	-.1931	-.4369	-.8257	-2.0305	-2.1156	-1.8819	-1.8232	
.020	.0000	-.3830	-.8799	-1.7412	-1.9123	-1.5024	-1.7827	-.8436
.040		-.3485	-.7657					
.050	-.1714			-.8742	-.9142	-1.0699	-1.0603	
.069								
.080				-.6492				-.7191
.081			-.5320					
.086		-.2320						
.094	-.1533							
.150				-.4092	-.4347	-.4828	-.4768	
.157								
.163		-.2880						-.3001
.177			-.3409					
.229	-.1227							
.245		-.3183						
.250				-.2723	-.3139	-.3429	-.3313	
.274			-.2498					
.345								
.390		-.2171						-.2847
.400				-.1976	-.2067		-.2259	
.402			-.1697					
.503								
.550				-.1987	-.2023			-.2667
.565			-.1654					
.600							-.2155	

AMES 11-073(OA148) -140A/B/C/R ORB LEFT WING BOT (XEBL61)

ALPHA (1) = -3.998 BETA (2) = -3.832

SECTION (1)LEFT WING BOT SURF DEPENDENT VARIABLE CP

2Y/BW	.2990	.3640	.4270	.5340	.6730	.7800	.8870	.9720
X/CW								
.637		-.1937						
.650						-.1909		
.670								-.2521
.700					-.1870			
.725				-.1614				
.750						-.2223	-.1[illegible]53	
.760			-.1644					
.775				-.1533	-.1356			
.799		-.1399						
.808			-.1661					
.934	-.1574							
.939		-.2015						
.850				-.1911	-.1613	-.1996		
.857			-.1861					
.862								-.1891
.865	-.1616							
.879		-.1905						
.900	-.1645			-.1597			-.1345	
.905			-.1656					
.919		-.1508						
.950				-.0667	-.0862	-.0529		
.953			-.0682					
.955		-.0817						
.965	-.0527							
1.000			.0602		.0177		.0449	

ALPHA (1) = -3.980 BETA (3) = .201 MACH = .59638 Q = 594.21 P = 2388.5 RN/L = 4.8411

SECTION (1)LEFT WING BOT SURF DEPENDENT VARIABLE CP

2Y/BW	.2990	.3640	.4270	.5340	.6730	.7800	.8870	.9720
X/CW								
.010	-.1003	-.2261	-.5676	-1.7760	-1.9076	-2.1906	-1.9565	
.020	.0000	-.2034	-.6158	-1.3595	-1.4937	-1.6141	-1.8203	-.7445
.040		-.1892	-.5780					
.050	-.0992			-.7638	-.8426	-.9050	-.9647	
.059								-.5546
.080				-.5794				
.091			-.4343					
.095		-.1328						
.094	-.0976							
.150				-.3641	-.4041	-.4277	-.4179	
.157								-.2737
.163		-.1947						

DATE 10 FEB 76

TABULATED PRESSURE DATA - OA148 (AMES 11-073-1)

AMES 11-073(OA148) -140A/B/C/R ORB LEFT WING BOT

ALPHA (1) = -3.980 BETA (3) = .201 (XEBL61)

SECTION (1)LEFT WING BOT SURF

DEPENDENT VARIABLE CP

2Y/BW	.2990	.3640	.4270	.5340	.6730	.7800	.8870	.9720
X/CW								
.177								
.229	-.0762		-.2987					
.246		-.2766						
.250								
.274				-.2507	-.2957	-.3155	-.3022	
.345			-.2229					
.390		-.1966						
.400								-.2486
.402				-.1847	-.1952			
.503			-.1643				-.2082	
.550								
.565				-.1914	-.1966			-.2358
.600			-.1550					
.637		-.1895						
.650							-.2003	
.670						-.1873		
.700								
.725					-.1891			-.2267
.750				-.1643				
.760								
.775			-.1650			-.2047	-.1897	
.799		-.1371		-.1520	-.1287			
.808								
.834	-.1535		-.1626					
.839								
.850		-.1909						
.857				-.1916	-.1633	-.1993		
.862			-.1842					
.865	-.1528							
.879								-.1582
.900	-.1642	-.1865						
.905				-.1643				
.919			-.1683				-.1234	
.950		-.1497						
.953				-.0636	-.0762	-.0510		
.955			-.0735					
.965		-.0803						
1.000	-.0610							
			.0554		.0390		.0504	

AMES 11-073(OA148) -140A/B/C/R ORB LEFT WING BOT (XEBL61)

ALPHA (1) = -3.998 BETA (4) = 4.282 MACH = .59638 Q = 594.21 P = 2386.5 RN/L = 4.8411

SECTION (1)LEFT WING BOT SURF DEPENDENT VARIABLE CP

2Y/BW	.2990	.3640	.4270	.5340	.6730	.7800	.8870	.9720
X/CW								
.010	-.0435	-.0987	-.3597	-1.4252	-1.5746	-1.9463	-1.7766	
.020	.0000	-.0862	-.4073	-1.1167	-1.2548	-1.3347	-1.6097	-.5735
.040		-.0685	-.4270					
.050	-.0541			-.6423	-.7232	-.8013	-.8154	
.069								
.080				-.4870				-.4250
.091			-.3453					
.086		-.0496						
.094	-.0553							
.150				-.3189	-.3550	-.3707	-.3828	
.157								
.163		-.1237						-.2417
.177			-.2545					
.274	-.0423							
.276		-.2184						
.280				-.2271	-.2620	-.2817	-.2755	
.274			-.1973					
.345								
.390		-.1702						-.2050
.400								
.402				-.1730	-.1794		-.1886	
.503			-.1533					
.550								-.1984
.565				-.1798	-.1851			
.600			-.1683					
.637		-.1735					-.1891	
.650								
.670						-.1747		
.700								-.1848
.725					-.1830			
.750				-.1620				
.760						-.2012	-.1768	
.775			-.1593					
.799				-.1456	-.1263			
.808		-.1342						
.824			-.1550					
.839	-.1548							
.850		-.1783						
.857				-.1877	-.1613	-.1948		
.862			-.1761					
.865	-.1515							-.1201
.879		-.1764						
.900	-.1624			-.1606			-.1187	
.905			-.1533					
.919		-.1434						

AMES 11-073(OA148) -140A/B/C/R ORB LEFT WING BOT (XEBL61)

ALPHA (1) = -3.998 BETA (4) = 4.282

SECTION (1)LEFT WING BOT SURF DEPENDENT VARIABLE CP

2Y/BW	.2990	.3640	.4270	.5340	.6730	.7800	.8870	.9720
X/CW								
.950				-.0630	-.0599	-.0515		
.953			-.0659					
.955		-.0793						
.965	-.0646							
1.000			.0566		.0521		.0686	

ALPHA (1) = -4.005 BETA (5) = 8.352 MACH = .59638 Q = 594.21 P = 2386.5 RN/L = 4.8411

SECTION (1)LEFT WING BOT SURF DEPENDENT VARIABLE CP

2Y/BW	.2990	.3640	.4270	.5340	.6730	.7800	.8870	.9720
X/CW								
.010	-.0189	.0105	-.1289	-1.0326	-1.2630	-1.6031	-1.4863	
.020	.0000	.0082	-.1903	-.8524	-.9498	-1.1069	-1.3394	-.4396
.040		.0129	-.2620					
.050	-.0243			-.5125	-.6022	-.6996	-.7218	
.069								-.3314
.090				-.3925				
.081			-.2520					
.096		.0129						
.094	-.0310							
.150				-.2622	-.3097	-.3259	-.3449	
.157								-.2095
.163		-.0553						
.177			-.2043					
.223	-.0182							
.246		-.1666						
.250				-.1996	-.2381	-.2463	-.2490	
.274			-.1659					
.345								-.1624
.390		-.1442						
.400				-.1583	-.1654		-.1705	
.452			-.1370					
.503								-.1650
.550				-.1571	-.1687			
.585			-.2100					
.600							-.1712	
.637		-.1636						
.650						-.1586		
.670								-.1469
.700					-.1757			
.725				-.1593				
.750						-.1893	-.1545	
.760			-.1510					

AMES 11-073(OA148) -140A/B/C/R ORB LEFT WING BOT (XE8L81)

ALPHA (1) = -4.005 BETA (5) = 8.352

SECTION (1)LEFT WING BOT SURF DEPENDENT VARIABLE CP

2Y/BW	.2990	.3640	.4270	.5340	.6730	.7800	.8870	.9720
X/CW								
.775				-.1351	-.1194			
.798		-.1292						
.808			-.1446					
.834	-.1543							
.839		-.1726						
.850				-.1778	-.1530	-.1810		
.857			-.1721					
.862								-.0816
.865	-.1434							
.879		-.1726						
.900	-.1538			-.1498			-.0994	
.905			-.1472					
.919		-.1434						
.950				-.0554	-.0409	-.0408		
.953			-.0604					
.955		-.0867						
.965	-.0608							
1.000			.0606		.0696		.0827	

ALPHA (2) = .015 BETA (1) = -7.895 MACH = .59624 Q = 593.85 P = 2388.1 RN/L = 4.8452

SECTION (1)LEFT WING BOT SURF DEPENDENT VARIABLE CP

2Y/BW	.2990	.3640	.4270	.5340	.6730	.7800	.8870	.9720
X/CW								
.010	-.0063	-.0380	-.1428	-.9271	-.9293	-.8791	-.7066	
.020	.0000	-.0658	-.2803	-.8199	-.7123	-.7328	-.7559	-.1992
.040		-.0606	-.3721					
.050	-.0503			-.4983	-.4874	-.5045	-.4700	
.069								-.1779
.080				-.3819				
.081			-.2921					
.086		-.0380						
.094	-.0609							
.150				-.2301	-.2244	-.2210	-.2272	
.157								-.1772
.163		-.1201						
.177			-.1948					
.229	-.0492							
.246		-.1876						
.250				-.1475	-.1765	-.1742	-.1772	
.274			-.1393					
.340								-.1361
.540		-.1196						

AMES 11-073(OA148) -140A/B/C/R ORB LEFT WING BOT (XEBL61)

ALPHA (2) = .015 BETA (1) = -7.895

SECTION (1)LEFT WING BOT SURF DEPENDENT VARIABLE CP

2Y/BW	.2990	.3640	.4270	.5340	.6730	.7800	.8870	.9720
X/CW								
.400				-.1140	-.1193		-.1309	
.402			-.0920					
.503								-.1768
.550				-.1440	-.1402			
.565			-.2639					
.600							-.1639	
.637		-.1574						
.650						-.1552		
.670								-.1820
.700					-.1610			
.725				-.1340				
.750						-.1903	-.1705	
.760			-.1409					
.775				-.1245	-.1065			
.798		-.1164						
.808			-.1450					
.834	-.1409							
.839		-.1846						
.850				-.1749	-.1511	-.1926		
.857			-.1704					
.862								-.1578
.865	-.1466							
.879		-.1806						
.900	-.1525			-.1578			-.1356	
.905			-.1542					
.919		-.1354						
.950				-.0626	-.0801	-.0549		
.953			-.0586					
.955		-.0700						
.965	-.0317							
1.000			.0717		.0194		.0489	

ALPHA (2) = .022 BETA (2) = -3.851 MACH = .59624 Q = 593.85 P = 2386.1 RN/L = 4.8452

SECTION (1)LEFT WING BOT SURF DEPENDENT VARIABLE CP

2Y/BW	.2990	.3640	.4270	.5340	.6730	.7800	.8870	.9720
X/CW								
.010	.0147	.0402	-.0183	-.7051	-.7889	-.7452	-.5944	
.020	.0000	.0090	-.1417	-.6835	-.6094	-.6435	-.6915	-.1657
.040		.0161	-.2473					
.050	-.0204			-.4161	-.4123	-.4525	-.4412	
.069								-.1591
.080				-.3229				

AMES 11-073(OA148) -140A/B/C/R ORB LEFT WING BOT (XE2L61)

ALPHA (2) = .022 BETA (2) = -3.851

SECTION (1)LEFT WING BOT SURF DEPENDENT VARIABLE CP

2Y/BW	.2990	.3640	.4270	.5340	.6730	.7800	.8870	.9720
X/CW								
.081			-.2295					
.086		.0225						
.094	-.0320							
.150				-.2020	-.2040	-.1971	-.2151	
.157								
.163		-.0613						-.1711
.177			-.1647					
.229	-.0206							
.246		-.1460						
.250				-.1337	-.1591	-.1673	-.1685	
.274			-.1241					
.345								
.390		-.1045						.1297
.400				-.1064	-.1094		-.1292	
.402			-.0833					
.503								
.550				-.1389	-.1431			-.1691
.565			-.2307					
.600								
.637		-.1460					-.1671	
.650								
.670						-.1491		
.700								-.1755
.725					-.1596			
.750				-.1346				
.760						-.1923	-.1654	
.775			-.1408					
.798				-.1237	-.1071			
.808		-.1178						
.834	-.1433		-.1400					
.839		-.1834						
.850								
.857				-.1812	-.1541	-.1947		
.862			-.1728					
.865	-.1399							-.1416
.879		-.1829						
.900	-.1480							
.905				-.1548			-.1352	
.919			-.1585					
.950		-.1471						
.953				-.0655	-.0711	-.0554		
.955			-.0634					
.965	-.0455	-.0789						
1.000			.0654		.0409		.0537	

AMES 11-073(OA148) -140A/B/C/R ORB LEFT WING BOT (XEBL61)

ALPHA (2) = .105 BETA (3) = .189 MACH = .59624 Q = 593.85 P = 2386.1 RN/L = 4.8452

SECTION (1)LEFT WING BOT SURF DEPENDENT VARIABLE CP

2Y/BW	.2990	.3640	.4270	.5340	.6730	.7800	.8870	.9720
X/CW								
.010	.0089	.0632	.0934	-.5164	-.6013	-.5865	-.5175	
.020	.0000	.0587	.0065	-.5137	-.4926	-.5196	-.5808	-.1650
.040		.0672	-.1363					
.050	.0008			-.3284	-.3472	-.3864	-.3999	
.069								-.1494
.080				-.2619				
.081			-.1589					
.086		.0667						
.094	-.0099							
.150				-.1761	-.1721	-.1805	-.1995	
.157								-.1782
.163		-.0058						
.177			-.1330					
.229	.0029							
.246		-.1216						
.250				-.1230	-.1424	-.1567	-.1607	
.274			-.1083					
.345								-.1304
.390		-.0894						
.400				-.1033	-.1058		-.1318	
.402			-.0793					
.503								-.1642
.550				-.1298	-.1380			
.565			-.2178					
.600							-.1647	
.637		-.1393						
.650						-.1581		
.670								-.1745
.700					-.1660			
.725				-.1395				
.750						-.1954	-.1683	
.760			-.1430					
.775				-.1265	-.1088			
.798		-.1128						
.808			-.1456					
.834	-.1414							
.839		-.1802						
.850				-.1804	-.1629	-.1994		
.857			-.1724					
.862								-.1293
.865	-.1350							
.879		-.1824						
.900	-.1587			-.1595			-.1342	
.905			-.1653					
.919		-.1517						

AMES 11-073(OA148) -140A/B/C/R ORB LEFT WING BOT (XEBL61)

ALPHA (2) = .105 BETA (3) = .189

SECTION (1)LEFT WING BOT SURF DEPENDENT VARIABLE CP

2Y/BW	.2990	.3640	.4270	.5340	.6730	.7800	.8870	.9720
X/CW								
.950				-.0647	-.0658	-.0608		
.953			-.0741					
.955		-.0909						
.965	-.0608							
1.000			.0616		.0558		.0642	

ALPHA (2) = .100 BETA (4) = 4.264 MACH = .59624 Q = 593.85 P = 2386.1 RN/L = 4.8452

SECTION (1)LEFT WING BOT SURF DEPENDENT VARIABLE CP

2Y/BW	.2990	.3640	.4270	.5340	.6730	.7800	.8870	.9720
X/CW								
.010	-.0302	.0472	.1495	-.3463	-.4438	-.4158	-.3517	
.020	.0000	.0583	.0877	-.3709	-.3638	-.4039	-.4196	-.1512
.040		.0779	-.0506					
.050	-.0110			-.2492	-.2751	-.3004	-.3046	
.069								-.1626
.080				-.2089				
.081			-.1062					
.086		.0883						
.094	-.0142							
.150				-.1418	-.1490	-.1502	-.1796	
.157								-.1621
.163		.0340						
.177			-.1001					
.229	.0050							
.246		-.0865						
.250				-.1004	-.1257	-.1351	-.1438	
.274			-.0891					
.345								-.1275
.330		-.0742						
.400				-.0962	-.0984		-.1227	
.402			-.0749					
.503								-.1666
.550				-.1292	-.1330			
.565			-.2301					
.600							-.1554	
.637		-.1378						
.650						-.1462		
.670								-.1836
.700					-.1617			
.725				-.1380				
.750						-.1939	-.1678	
.760			-.1417					

AMES 11-073(OA148) +140A/B/C/R ORB LEFT WING BOT (XE8L61)

ALPHA (2) = .100 BETA (4) = 4.264

SECTION (1)LEFT WING BOT SURF DEPENDENT VARIABLE CP

2Y/BW	.2990	.3640	.4270	.5340	.6730	.7800	.8870	.9720
X/CW								
.775				-.1228	-.1134			
.798		-.1176						
.808			-.1374					
.834	-.1387							
.839		-.1727						
.850				-.1825	-.1615	-.1996		
.857			-.1749					
.862								
.865	-.1380						-.1281	
.879		-.1743						
.900	-.1529							
.905				-.1599		-.1298		
.919			-.1592					
.950		-.1503						
.953				-.0676	-.0543	-.0592		
.955			-.0744					
.965		-.0890						
1.000	-.0669							
			.0523		.0667		.0742	

ALPHA (2) = .094 BETA (5) = 8.317 MACH = .59624 Q = 593.85 P = 2386.1 RN/L = 4.8452

SECTION (1)LEFT WING BOT SURF DEPENDENT VARIABLE CP

2Y/BW	.2990	.3640	.4270	.5340	.6730	.7800	.8870	.9720
X/CW								
.010	-.1105	-.0312	.1902	-.1665	-.2825	-.2753	-.2453	
.020	.0000	.0107	.1557	-.2137	-.2433	-.2916	-.3248	-.1638
.040		.0407	.0307					
.050	-.0428							
.069				-.1511	-.1898	-.2363	-.2597	
.090								-.1830
.081				-.1431				
.086			-.0442					
.094		.0866						
.150	-.0264							
.157				-.1105	-.1165	-.1258	-.1635	
.163		.0646						-.1799
.177			-.0725					
.229	.0021							
.246		-.0607						
.250				-.0890	-.1130	-.1280	-.1420	
.274			-.0694					
.345								
.350		-.0626						-.1398

AMES 11-073(OA148) -140A/B/C/R ORB LEFT WING BOT (XE8L61)

ALPHA (2) = .094 BETA (5) = 8.317

SECTION (1)LEFT WING BOT SURF DEPENDENT VARIABLE CP

2Y/BW	.2990	.3640	.4270	.5340	.6730	.7800	.8870	.9720
X/CW								
.400				-.0899	-.0887		-.1192	
.402			-.0711					
.503								-.1719
.550				-.1244	-.1306			
.565			-.2632					
.600							-.1595	
.637		-.1341						
.650						-.1396		
.670								-.1887
.700					-.1575			
.725				-.1410				
.750						-.1845	-.1635	
.760			-.1403					
.775				-.1163	-.1090			
.798		-.1176						
.808			-.1315					
.834	-.1413							
.839		-.1624						
.850				-.1750	-.1549	-.1852		
.857			-.1714					
.862								-.1206
.865	-.1349							
.879		-.1691						
.900	-.1543			-.1577			-.1208	
.905			-.1557					
.919		-.1480						
.920				-.0845	-.0470	-.0549		
.934			-.0778					
.945		-.0926						
.965	-.0713							
1.000			.0494		.0740		.0855	

ALPHA (3) = 4.024 BETA (1) = -7.901 MACH = .59706 Q = 595.26 P = 2385.4 RN/L = 4.8521

SECTION (1)LEFT WING BOT SURF DEPENDENT VARIABLE CP

2Y/BW	.2990	.3640	.4270	.5340	.6730	.7800	.8870	.9720
X/CW								
.010	.0829	.1485	.3308	.0056	.0358	.1760	.2388	
.020	.0000	.1488	.2312	-.0955	.0080	.0327	.0773	.0160
.040		.1659	.0484					
.050	.0720			-.0844	-.0464	-.0145	.0151	
.069								-.0055
.080				-.0699				

DATE 10 FEB 76 TABULATED PRESSURE DATA - OA148 (AMES 11-073-1)

AMES 11-073(OA148) -140A/B/C/R ORB LEFT WING BOT (XEBLB1)

ALPHA (3) = 4.024 BETA (1) = -7.901

SECTION (1)LEFT WING BOT SURF DEPENDENT VARIABLE CP

2Y/BW	.2990	.3640	.4270	.5340	.6730	.7800	.8870	.9720
X/CW								
.091			-.0128					
.086		.1634						
.094	.0526							
.150				-.0266	-.0082	.0131	-.0012	
.157								-.1079
.163		.0932						
.177			-.0137					
.229	.0583							
.246		-.0178						
.250				-.0044	-.0143	-.0175	-.0206	
.274			-.0066					
.345								-.0592
.390		-.0055						
.400				-.0205	-.0150		-.0410	
.402			.0007					
.503								-.1269
.550				-.0726	-.0747			
.565			-.2871					
.600							-.1211	
.637		-.0931						
.650						-.0977		
.670								-.1659
.700					-.1172			
.725				-.0946				
.750						-.1720	-.1305	
.760			-.1081					
.775				-.0937	-.0735			
.798		-.0827						
.808			-.1100					
.834	-.1127							
.839		-.1507						
.850				-.1584	-.1395	-.1864		
.857			-.1498					
.862								-.1817
.865	-.1141							
.879		-.1565						
.900	-.1281			-.1416			-.1492	
.905			-.1418					
.919		-.1255						
.940				-.0571	-.0585	-.0621		
.943			-.0505					
.955		-.0592						
.965	-.0219							
1.000			.0756		.0496		.0141	

AMES 11-073(OA148) -140A/B/C/R ORB LEFT WING BOT (XE8L61)

ALPHA (3) = 4.026 BETA (2) = -3.849 MACH = .59706 Q = 595.26 P = 2385.4 RN/L = 4.8521

SECTION (1)LEFT WING BOT SURF DEPENDENT VARIABLE CP

2Y/BW	.2990	.3640	.4270	.5340	.6730	.7800	.8870	.9720
X/CW								
.010	.0145	.0669	.3334	.1077	.0948	.2083	.2538	
.020	.0000	.1145	.2729	-.0166	.0432	.0705	.1089	-.0763
.040		.1416	.1138					
.050	.0438			-.0184	-.0134	.0072	.0264	
.069								-.0780
.080				-.0372				
.081			.0195					
.086		.1709						
.094	.0398							
.150				-.0112	-.0010	.0161	-.0145	
.157								-.1325
.163		.1263						
.177			.0007					
.229	.0580							
.246		-.0041						
250				.0001	-.0132	-.0180	-.0353	
.274			.0019					
.345								-.0950
.399		-.0006						
.400				-.0203	-.0174		-.0475	
.402			-.0031					
.503								-.1565
.550				-.0788	-.0815			
.565			-.2586					
.600							-.1297	
.637		-.0895						
.650						-.1089		
.670								-.1918
.700					-.1299			
.775				-.1082				
.750						-.1688	-.1436	
750			-.1159					
.775				-.0975	-. 708			
.798		-.0885						
.808			-.1112					
.834	-.1134							
.839		-.1575						
.850				-.1646	-.1496	-.1923		
.857			-.1543					
.852								
.865	-.1127							-.1987
.879		-.1645						
.900	-.1368			-.1506				
.905			-.1507				-.1547	
.919		-.1353						

AMES 11-073(OA148) -140A/B/C/R ORB LEFT WING BOT (XEBL61)

ALPHA (3) = 4.026 BETA (2) = -3.849

SECTION (1)LEFT WING BOT SURF DEPENDENT VARIABLE CP

2Y/BW	.2990	.3640	.4270	.5340	.6730	.7800	.8870	.9720
X/CW								
.950				-.0608	-.0644	-.0694		
.953			-.0652					
.955		-.0767						
.955	-.0424							
1.000			.0664		.0621		.0252	

ALPHA (3) = 4.034 BETA (3) = .195 MACH = .59763 Q = 595.26 P = 2385.4 RN/L = 4.8521

SECTION (1)LEFT WING BOT SURF DEPENDENT VARIABLE CP

2Y/BW	.2990	.3640	.4270	.5340	.6730	.7800	.8870	.9720
X/CW								
.010	-.0811	-.0611	.2978	.1617	.1293	.2260	.2314	
.020	.0000	.0417	.2800	.0470	.0823	.0977	.1165	-.1707
.040		.0797	.1465					
.050	.0059			.0171	.0071	.0195	.0213	
.069								-.1558
.080				-.0060				
.081			.0514					
.086		.1556						
.094	.0164							
.150				-.0008	.0060	.0157	-.0283	
.157								-.1605
.163		.1389						
.177			.0136					
.229	.0517							
.246		.0078						
.250				-.0041	-.0114	-.0213	-.0491	
.274			.0018					
.345								-.1290
.390		.0101						
.400				-.0224	-.0210		-.0673	
.402			-.0063					
.503								-.1792
.550				-.0763	-.0827			
.565			-.2506					
.600							-.1407	
.637		-.0894						
.650						-.1119		
.670								-.2082
.700					-.1343			
.725				-.1106				
.750						-.1894	-.1560	
.760			-.1168					

AMES 11-073(OA148) -140A/B/C/R ORB LEFT WING BOT (XE8L61)

ALPHA (3) = 4.034 BETA (3) = .195

SECTION (1)LEFT WING BOT SURF DEPENDENT VARIABLE CP

2Y/BW	.2990	.3640	.4270	.5340	.6730	.7800	.8870	.9720
X/CW								
.775				-.1052	-.0900			
.798		-.0918						
.808			-.1168					
.834	-.1190							
.839		-.1558						
.850				-.1652	-.1526	-.2002		
.857			-.1583					
.862								-.2007
.865	-.1166							
.879		-.1647						
.900	-.1405			-.1526			-.1596	
.905			-.1604					
.919		-.1433						
.950				-.0687	-.0564	-.0728		
.953			-.0694					
.955		-.0873						
.965	-.0558							
1.000			.0701		.0703		.0344	

ALPHA (3) = 4.044 BETA (4) = 4.254 MACH = .59706 Q = 595.26 P = 2385.4 RN/L = 4.8521

SECTION (1)LEFT WING BOT SURF DEPENDENT VARIABLE CP

2Y/BW	.2990	.3640	.4270	.5340	.6730	.7800	.8870	.9720
X/CW								
.010	-.2166	-.2262	.2237	.2156	.1825	.2591	.2567	
.020	.0000	-.0728	.2585	.1110	.1290	.1449	.1439	-.3157
.040		-.0144	.1741					
.050	-.0547			.0659	.0458	.0561	.0558	
.069								-.2634
.080				.0332				
.091			.0815					
.026		.1178						
.094	-.0176							
.150				.0160	.0258	.0203	-.0235	
.157								-.2043
.163		.1428						
.177			.0322					
.229	.0356							
.246		.0231						
.250				.0083	-.0024	-.0177	-.0457	
.274			.0139					
.345								-.1768
.390		.0118						

AMES 11-073(OA148) -140A/B/C/R ORB LEFT WING BOT (XEBL61)

ALPHA (3) = 4.044 BETA (4) = 4.254

SECTION (1)LEFT WING BOT SURF DEPENDENT VARIABLE CP

2Y/BW	.2990	.3640	.4270	.5340	.6730	.7800	.8870	.9720
X/CW								
.400				-.0182	-.0234		-.0680	
.402			.0018					
.503								-.2277
.550				-.0758	-.0880			
.565			-.2435					
.600							-.1498	
.637		-.0834						
.650						-.1190		
.670								-.2350
.700					-.1385			
.725				-.1140				
.750						-.1877	-.1674	
.760			-.1176					
.775				-.1043	-.0976			
.798		-.0986						
.808			-.1146					
.834	-.1186							
.839		-.1495						
.850				-.1712	-.1547	-.1966		
.857			-.1589					
.862								-.2129
.865	-.1141							
.879		-.1592						
.900	-.1392			-.1594			-.1598	
.905			-.1532					
.919		-.1427						
.950				-.0813	-.0539	-.0730		
.953			-.0807					
.955		-.0884						
.965	-.0602							
1.000			.0495		.0690		.0368	

ALPHA (3) = 4.047 BETA (5) = 8.299 MACH = .59706 Q = 595.26 P = 2385.4 RN/L = 4.8521

SECTION (1)LEFT WING BOT SURF DEPENDENT VARIABLE CP

2Y/BW	.2990	.3640	.4270	.5340	.6730	.7800	.8870	.9720
X/CW								
.010	-.3871	-.3633	.0917	.2500	.2020	.2443	.2238	
.020	.0000	-.1934	.1087	.1601	.1553	.1573	.1380	-.4750
.040		-.1297	.1709					
.050	-.1290			.0901	.0850	.0634	.0547	
.069								-.3881
.080				.0498				

AMES 11-073(OA148) -140A/B/C/R ORB LEFT WING BOT (XEBL61)

ALPHA (3) = 4.047 BETA (5) = 8.299

SECTION (1)LEFT WING BOT SURF DEPENDENT VARIABLE CP

2Y/BW	.2990	.3640	.4270	.5340	.6730	.7800	.8870	.9720
X/CW								
.081			.1000					
.086		.0613						
.094	-.0726							
.150				.0270	.0265	.0271	-.0312	
.157								-.2657
.163		.1359						
.177			.0464					
.229	.0006							
.246		.0248						
.250				.0055	-.0043	-.0113	-.0598	
.274			.0148					
.345								-.2360
.390		.0134						
.400				-.0244	-.0275		-.0837	
.402			-.0044					
.503								-.2648
.540				-.0774	-.0807			
.550			-.2800					
.600							-.1505	
.637		-.0814						
.650						-.1183		
.670								-.2633
.700					-.1309			
.725				-.1153				
.750						-.1767	-.1691	
.760			-.1187					
.775				-.1032	-.0943			
.798		-.1000						
.808			-.1104					
.834	-.1209							
.639		-.1427						
.850				-.1611	-.1516	-.1887		
.857			-.1581					
.862								-.2149
.865	-.1160							
.879		-.1561						
.900	-.1427			-.1532			-.1500	
.905			-.1505					
.919		-.1375						
.950				-.0741	-.0500	-.0749		
.953			-.0822					
.955		-.0890						
.965	-.0700							
1.000			.0421		.0614		.0375	

AMES 11-073(OA148) -140A/B/C/R ORB LEFT WING BOT (XE8L61)

ALPHA (4) = 8.028 BETA (1) = -7.897 MACH = .59720 Q = 595.49 P = 2385.3 RN/L = 4.8534

SECTION (1)LEFT WING BOT SURF DEPENDENT VARIABLE CP

2Y/BW	.2990	.3540	.4270	.5340	.6730	.7800	.8870	.9720
X/CW								
.010	-.0255	-.0785	.3993	.4870	.5011	.5695	.5456	
.020	.0000	.0968	.4353	.3557	.4194	.4549	.4627	-.2726
.040		.1524	.3197					
.050	.0983							
.069				.2415	.2848	.3137	.3281	
.080								-.1382
.081				.1925				
.085			.2093					
.094		.2603						
.150	.1130							
.157				.1558	.1854	.1980	.1638	
.163								-.1363
.177		.2558						
.229			.1446					
.246	.1345							
.250		.1312						
.274				.1265	.1281	.1276	.1030	
.345			.1162					
.390								-.0630
.400		.1081						
.402				.0735	.0812		.0435	
.503			.0941					
.550								-.1361
.565				.0016	-.0036			
.600			-.2930					
.637		-.0262						
.650							-.0742	
.670						-.0569		
.700								-.1720
.725					-.0843			
.750				-.0598				
.760						-.1353	-.1068	
.775			-.0781					
.798				-.0543	-.0451			
.808		-.0490						
.834	-.0847		-.0753					
.839		-.1215						
.850				-.1294	-.1221	-.1678		
.857			-.1198					
.862								
.865	-.0828							-.2434
.879		-.1300						
.900	-.1012			-.1309				
.905			-.1262				-.1762	
.919		-.1111						

AMES 11-073(OA148) -140A/B/C/R ORB LEFT WING BOT (XEBL61)

ALPHA (4) = 8.028 BETA (1) = -7.897

SECTION (1)LEFT WING BOT SURF DEPENDENT VARIABLE CP

2Y/BW	.2990	.3640	.4270	.5340	.6730	.7800	.8870	.9720
X/CW								
.950				-.0562	-.0418	-.0750		
.953			-.0442					
.955		-.0547						
.965	-.0166							
1.000			.0693		.0772		-.0664	

ALPHA (4) = 8.037 BETA (2) = -3.847 MACH = .59720 Q = 595.49 P = 2385.3 RN/L = 4.8534

SECTION (1)LEFT WING BOT SURF DEPENDENT VARIABLE CP

2Y/BW	.2990	.3640	.4270	.5340	.6730	.7800	.8870	.9720
X/CW								
.010	-.1812	-.2062	.2783	.4793	.4739	.5094	.4738	
.020	.0000	-.0342	.3763	.3649	.4082	.4349	.4248	-.4735
.040		.0395	.3183					
.060	.0271			.2587	.2842	.3034	.3077	
.069								-.2954
.080				.1937				
.081			.2236					
.086		.2140						
.094	.0692							
.150				.1592	.1863	.1933	.1425	
.157								-.1859
.163		.2564						
.177			.1469					
.229	.1170							
.246		.1302						
.250				.1214	.1189	.1159	.0775	
.274			.1156					
.345								-.1280
.380		.1066						
.400				.0707	.0726		.0228	
.402			.0882					
.503								-.2038
.550				-.0048	-.0111			
.565			-.2823					
.600							-.0973	
.637		-.0203						
.650						-.0646		
.670								-.2065
.700					-.0891			
.725				-.0695				
.750						-.1404	-.1247	
.760			-.0830					

AMES 11-073(OA148) -140A/B/C/R ORB LEFT WING BOT (XEBL61)

ALPHA (4) = 8.037 BETA (2) = -3.847

SECTION (1)LEFT WING BOT SURF DEPENDENT VARIABLE CP

2Y/BW	.2990	.3640	.4270	.5340	.6730	.7800	.8870	.9720
X/CW								
.775				-.0634	-.0526			
.798		-.0552						
.808			-.0730					
.834	-.0854							
.839		-.1229						
.850				-.1414	-.1339	-.1793		
.857			-.1272					
.862								
.865	-.0807							-.2667
.879		-.1318						
.900	-.1046			-.1376			-.1786	
.905			-.1331					
.919		-.1140						
.950				-.0655	-.0543	-.0889		
.953			-.0581					
.955		-.0634						
.965	-.0265							
1.000			.0695		.0693		-.0505	

ALPHA (4) = 8.042 BETA (3) = .196 MACH = .59720 Q = 595.49 P = 2385.3 RN/L = 4.8534

SECTION (1)LEFT WING BOT SURF DEPENDENT VARIABLE CP

2Y/BW	.2990	.3640	.4270	.5340	.6730	.7800	.8870	.9720
X/CW								
.010	-.3807	-.5447	.1172	.4402	.4290	.4319	.3768	
.020	.0000	-.2082	.2811	.3590	.3865	.3980	.3654	-.6881
.040		-.1063	.3022					
.050	-.0573			.2673	.2824	.2909	.2752	
.069								-.4546
.080				.2033				
.081			.2199					
.086		.1481						
.094	.0044							
.150				.1541	.1776	.1758	.1172	
.157								-.2491
.163		.2445						
.177			.1542					
.229	.0829							
.246		.1300						
.250				.1165	.1160	.1036	.0566	
.274			.1141					
.345								
.390		.1040						-.2065

AMES 11-073(OA148) -140A/B/C/R ORB LEFT WING BOT (XEBL61)

ALPHA (4) = 8.042 BETA (3) = .196

SECTION (1)LEFT WING BOT SURF DEPENDENT VARIABLE CP

2Y/BW	.2990	.3640	.4270	.5340	.6730	.7800	.8870	.9720
X/CW								
.400				.0671	.0648		-.0013	
.402			.0828					
.503								-.2628
.550				-.0072	-.0224			
.565			-.2698					
.600							-.1148	
.637		-.0273						
.650						-.0750		
.670								-.2535
.700					-.0966			
.725				-.0752				
.750						-.1500	-.1415	
.760			-.0813					
.775				-.0657	-.0600			
.798		-.0572						
.808			-.0768					
.834	-.0820							
.839		-.1241						
.850				-.1454	-.1311	-.1831		
.857			-.1327					
.862								-.2793
.865	-.0820							
.879		-.1370						
.900	-.1135			-.1480			-.1770	
.905			-.1365					
.919		-.1208						
.950				-.0719	-.0562	-.0918		
.953			-.0621					
.955		-.0728						
.965	-.0366							
1.000			.0608		.0618		-.0313	

ALPHA (4) = 7.960 BETA (4) = 4.251 MACH = .59720 Q = 595.49 P = 2385.3 RN/L = 4.8534

SECTION (1)LEFT WING BOT SURF DEPENDENT VARIABLE CP

2Y/BW	.2990	.3640	.4270	.5340	.6730	.7800	.8870	.9720
X/CW								
.010	-.5546	-.6815	-.0559	.3771	.3718	.3283	.2662	
.020	.0000	-.3465	.1589	.3340	.3451	.3494	.3019	-.9453
.040		-.2333	.2545					
.050	-.1569			.2517	.2722	.2619	.2347	
.069								-.6267
.080				.1941				

AMES 11-073(OA148) -140A/B/C/R ORB LEFT WING BOT (XE8L81)

ALPHA (4) = 7.960 BETA (4) = 4.251

SECTION (1)LEFT WING BOT SURF DEPENDENT VARIABLE CP

2Y/BW	.2990	.3640	.4270	.5340	.6730	.7800	.8870	.9720
X/CW								
.081			.2014					
.086		.0649						
.034	-.0644							
.150				.1414	.1571	.1657	.0864	
.157								-.3212
.163		.2045						
.177			.1418					
.229	.0469							
.246		.1078						
.250				.1054	.1017	.0891	.0313	
.274			.1041					
.345								-.2955
.390		.0922						
.400				.0513	.0531		-.0249	
.402			.0723					
.403								-.3331
.550				-.0199	-.0353			
.565			-.2744					
.600							-.1325	
.637		-.0326						
.650						-.0845		
.670								-.2964
.700					-.1020			
.725				-.0818				
.750						-.1602	-.1538	
.760			-.0874					
.775				-.0752	-.0672			
.798		-.0691						
.808			-.0910					
.834	-.0916							
.839		-.1217						
.850				-.1554	-.1424	-.1878		
.857			-.1375					
.862								-.2967
.865	-.0840							
.879		-.1379						
.900	-.1214			-.1478			-.1786	
.905			-.1404					
.919		-.1285						
.950				-.0700	-.0541	-.0954		
.953			-.0761					
.955		-.0805						
.965	-.0552							
1.000			.0379		.0528		-.0082	

AMES 11-073(OA148) -140A/B/C/R ORB LEFT WING BOT (XEBL61)

ALPHA (4) = 7.955 BETA (5) = 8.305 MACH = .59720 Q = 595.49 P = 2385.3 RN/L = 4.8534

SECTION (1)LEFT WING BOT SURF DEPENDENT VARIABLE CP

2Y/BW	.2990	.3640	.4270	.5340	.6730	.7800	.8870	.9720
X/CW								
.010	-.7423	-.6365	-.2713	.2854	.2829	.2005	.1424	
.020	.0000	-.4273	.0032	.2872	.2917	.2793	.2166	-1.1885
.040		-.3302	.1861					
.050	-.2630			.2339	.2505	.2294	.1851	
.069								-.8062
.080				.1847				
.081			.1745					
.085		-.0096						
.094	-.1443							
.150				.1296	.1477	.1429	.0552	
.157								-.3885
.163		.1692						
.177			.1337					
.229	.0007							
.246		.0931						
.250				.0914	.0937	.0733	.0025	
.274			.0985					
.345								-.3828
.320		.0818						
.400				.0452	.0377		-.0516	
.402			.0587					
.503								-.3806
.550				-.0252	-.0360			
.565			-.3151					
.600							-.1473	
.637		-.0322						
.650						-.0952		
.670								-.3314
.700					-.1128			
.725				-.0901				
.750						-.1763	-.1721	
.760			-.0873					
.775				-.0851	-.0898			
.799		-.0719						
.808			-.0868					
.834	-.0970							
.839		-.1193						
.850				-.1543	-.1648	-.2050		
.857			-.1372					
.862								-.2926
.865	-.0847							
.879		-.1364						
.901	-.1169			-.1550			-.1884	
[illegible]			-.1365					
.919		-.1275						

AMES 11-073(OA148) -140A/B/C/R ORB LEFT WING BOT (XE8L61)

ALPHA (4) = 7.955 BETA (5) = 8.305

SECTION (1)LEFT WING BOT SURF DEPENDENT VARIABLE CP

2Y/BW	.2990	.3640	.4270	.5340	.6730	.7800	.8870	.9720
X/CW								
.050				-.0801	-.0710	-.1171		
.953			-.0799					
.955		-.0850						
.965	-.0627							
1.000			.0426		.0375		-.0147	

ALPHA (5) = 11.943 BETA (1) = -7.853 MACH = .59660 Q = 594.44 P = 2386.0 RN/L = 4.8439

SECTION (1)LEFT WING BOT SURF DEPENDENT VARIABLE CP

2Y/BW	.2990	.3640	.4270	.5340	.6730	.7800	.8870	.9720
X/CW								
.010	-.3154	-.6518	.1367	.5929	.5953	.5145	.4453	
.020	.0000	-.1674	.3839	.5629	.5944	.5876	.5299	-.8098
.040		-.0470	.4550					
.050	.0555			.4567	.4948	.5042	.4803	
.069								-.4330
.080				.3821				
.081			.3706					
.086		.2702						
.094	.1189							
.150				.3020	.3422	.3486	.2874	
.157								-.2051
.163		.3688						
.177			.2889					
.229	.1979							
.246		.2521						
.250				.2525	.2539	.2532	.2011	
.274			.2334					
.345								-.0981
.390		.2078						
.400				.1712	.1742		.1189	
.402			.1865					
.503								-.1678
.550				.0769	.0690			
.565			-.2978					
.600							-.0270	
.637		.0503						
.650						.0013		
.670								-.1674
.700					-.0306			
.725				-.0142				
.750						-.0932	-.0702	
.760			-.0366					

AMES 11-073(OA148) -140A/B/C/R ORB LEFT WING BOT (XEBL61)

ALPHA (5) = 11.943 BETA (1) = -7.853

SECTION (1)LEFT WING BOT SURF DEPENDENT VARIABLE CP

2Y/BW	.2990	.3640	.4270	.5340	.6730	.7800	.8870	.9720
X/CW								
.775				-.0094	-.0090			
.798		-.0083						
.808			-.0290					
.834	-.0429							
.839		-.0810						
.850				-.1057	-.1077	-.1538		
.857			-.0887					
.862								-.2987
.865	-.0330							
.879		-.0956						
.900	-.0588			-.1137			-.1893	
.905			-.1022					
.919		-.0850						
.950				-.0590	-.0403	-.0991		
.953			-.0394					
.955		-.0432						
.965	.0025							
1.000			.0670		.0572		-.1283	

ALPHA (5) = 11.962 BETA (2) = -3.827 MACH = .59660 Q = 594.44 P = 2386.0 RN/L = 4.8439

SECTION (1)LEFT WING BOT SURF DEPENDENT VARIABLE CP

2Y/BW	.2990	.3640	.4270	.5340	.6730	.7800	.8870	.9720
X/CW								
.010	-.5470	-.8808	-.0798	.5024	.5005	.3772	.3076	
.020	.0000	-.3458	.2370	.5167	.5321	.5087	.4401	-1.0528
.040		-.1974	.3993					
.050	-.0562			.4397	.4718	.4640	.4256	
.069								-.6160
.080				.3663				
.081			.3537					
.086		.1783						
.094	.0479							
.150				.2911	.3174	.3310	.2467	
.157								-.2692
.163		.3368						
.177			.2771					
.229	.1547							
.246		.2365						
.250				.2403	.2346	.2300	.1637	
.274			.2263					
.345								-.1870
.390		.1983						

AMES 11-073(OA148) -140A/B/C/R OF8 LEFT WING BOT (XEBL61)

ALPHA (5) = 11.962 BETA (2) = -3.827

SECTION (1)LEFT WING BOT SURF DEPENDENT VARIABLE CP

2Y/BW	.2990	.3640	.4270	.5340	.6730	.7800	.8870	.9720
X/CW								
.400				.1616	.1602		.0843	
.402			.1743					
.503								-.2449
.550				.0622	.0530			
.565			-.2960					
.600								
.637		.0449					-.0564	
.650								
.670						-.0163		
.700								-.2319
.725					-.0498			
.750				-.0303				
.760			-.0431			-.1162	-.0967	
.775				-.0258	-.0335			
.798		-.0225						
.808			-.0374					
.834	-.0452							
.839		-.0876						
.850				-.1138	-.1271	-.1708		
.857			-.0995					
.862								
.865	-.0343							-.3261
.879		-.1055						
.900	-.0751			-.1279			-.2070	
.905			-.1158					
.919		-.0989						
.950				-.0653	-.0585	-.1188		
.953			-.0504					
.955		-.0556						
.965	-.0187							
1.000			.0671		.0534		-.1304	

ALPHA (5) = 11.967 BETA (3) = .197 MACH = .59660 Q = 594.44 P = 2386.0 RN/L = 4.8439

SECTION (1)LEFT WING BOT SURF DEPENDENT VARIABLE CP

2Y/BW	.2990	.3640	.4270	.5340	.6730	.7800	.8870	.9720
X/CW								
.010	-.7790	-1.1101	-.3378	.3815	.3821	.2234	.1483	
.020	.0000	-.5273	.0637	.4479	.4530	.4189	.3320	-1.2639
.040		-.3711	.3229					
.050	-.1673			.4029	.4314	.4066	.3563	
.069								
.080				.3403				-.7957

AMES 11-073(OA148) -149A/B/C/R ORB LEFT WING BOT (XEBL61)

ALPHA (5) = 11.967 BETA (3) = 197

SECTION (1)LEFT WING BOT SURF DEPENDENT VARIABLE CP

2Y/BW	.2990	.3640	.4270	.5340	.6730	.7800	.8870	.9720
X/CW								
.081			.3253					
.086		.0822						
.094	-.0372							
.150				.2666	.2937	.2988	.2015	
.157								-.3414
.163		.2962						
.177			.2593					
.229	.1021							
.246		.2122						
.250				.2187	.2121	.2076	.1281	
.274			.2090					
.345								-.2690
.390		.1929						
.400				.1445	.1407		.0473	
.402			.1594					
.503								-.3087
.550				.0533	.0369			
.565			-.2635					
.600							-.0799	
.637		.0421						
.650						-.0359		
.670								-.2807
.700					-.0660			
.725				-.0424				
.750						-.1380	-.1254	
.760			-.0528					
.775				-.0379	-.0570			
.798		-.0260						
.808			-.0421					
.834	-.0559							
.839		-.0866						
.850				-.1320	-.1512	-.1907		
.857			-.1055					
.862								-.3377
.865	-.0468							
.879		-.1123						
.900	-.0895			-.1399			-.2246	
.905			-.1268					
.919		-.1069						
.950				-.0786	-.0787	-.1389		
.953			-.0630					
.955		-.0669						
.975	-.0296							
1.000			.0203		.0094		-.1306	

AMES 11-073(OA148) -140A/B/C/R ORB LEFT WING BOT (XEBL61)

ALPHA (5) = 11.963 BETA (4) = 4.259 MACH = .59660 Q = 594.44 P = 2386.0 RN/L = 4.8439

SECTION (1)LEFT WING BOT SURF DEPENDENT VARIABLE CP

2Y/BW	.2990	.3640	.4270	.5340	.6730	.7800	.8870	.9720
X/CW								
.010	-.9979	-.9467	-.5453	.2462	.2483	.0342	-.0392	
.020	.0000	-.6062	-.1105	.3616	.3568	.3176	.2090	-1.4554
.040		-.4703	.2286					
.050	-.2867			.3538	.3760	.3473	.2818	
.069								-.9375
.080				.3025				
.081			.2722					
.085		-.0149						
.094	-.1331							
.150				.2384	.2687	.2673	.1692	
.157								-.3971
.163		.2380						
.177			.2329					
.229	.0433							
.246		.1785						
.250				.1950	.1940	.1803	.0971	
.274			.1908					
.345								-.3264
.390		.1699						
.400				.1256	.1230		.0231	
.402			.1430					
.503								-.3585
.550				.0437	.0212			
.565			-.2979					
.600							-.1013	
.637		.0331						
.650						.0522		
.670								-.3100
.700					-.0815			
.725				-.0533				
.750						-.1501	-.1443	
.760			-.0613					
.775				-.0436	-.0702			
.798		-.0341						
.808			-.0546					
.834	-.0593							
.833		-.0911						
.850				-.1418	-.1598	-.1985		
.857			-.1167					
.862								-.3240
.865	-.0483							
.879		-.1150						
.900	-.0951			-.1549			-.2266	
.905			-.1286					
.919		-.1150						

AMES 11-073(OA148) -140A/B/C/R ORB LEFT WING BOT (XEBL61)

ALPHA (5) = 11.963 BETA (4) = 4.259

SECTION (1)LEFT WING BOT SURF DEPENDENT VARIABLE CP

2Y/BW	.2990	.3640	.4270	.5340	.6730	.7800	.8870	.9720
X/CW								
.950				-.0944	-.0735	-.1513		
.953			-.0777					
.955		-.0777						
.965	-.0431							
1.000			.0331		.0212		-.1356	

ALPHA (5) = 11.951 BETA (5) = 8.316 MACH = .59660 Q = 594.44 P = 2386.0 RN/L = 4.8439

SECTION (1)LEFT WING BOT SURF DEPENDENT VARIABLE CP

2Y/BW	.2990	.3640	.4270	.5340	.6730	.7800	.8870	.9720
X/CW								
.010	-1.2266	-.7293	-.7323	.0794	.0864	-.1677	-.2292	
.020	.0000	-.5376	-.3037	.2547	.2493	.1836	.0751	-1.5728
.040		-.5339	.1213					
.050	-.4249			.2908	.3097	.2770	.2026	
.069								-1.0862
.080				.2622				
.081			.2204					
.086		-.0923						
.094	-.2327							
.150				.2109	.2346	.2310	.1212	
.157								-.4556
.163		.1799						
.177			.2107					
.229	-.0013							
.246		.1479						
.250				.1734	.1758	.1567	.0678	
.274			.1780					
.345								-.3912
.390		.1559						
.400				.1170	.1078		-.0055	
.402			.1306					
.503								-.4119
.550				.0316	.0157			
.565			-.3080					
.600							-.1156	
.637		.0225						
.650						-.0638		
.670								-.3441
.700					-.0848			
.725				-.0560				
.750						-.1617	-.1598	
.760			-.0607					

AMES 11-073(OA148) -140A/B/C/R ORB LEFT WING BOT (XEBL61)

ALPHA (5) = 11.951 BETA (5) = 8.316

SECTION (1)LEFT WING BOT SURF DEPENDENT VARIABLE CP

2Y/BW	.2990	.3640	.4270	.5340	.6730	.7800	.8870	.9720
X/CW								
.775				-.0472	-.0697			
.798		-.0423						
.808			-.0501					
.834	-.0652							
.839		-.0826						
.850				-.1369	-.1581	-.1957		
.857			-.1110					
.862								-.3072
.865	-.0443							
.879		-.1085						
.900	-.0855			-.1585			-.2230	
.905			-.1262					
.919		-.1195						
.950				-.1046	-.0885	-.1530		
.953			-.0806					
.955		-.0870						
.965	-.0451							
1.000			.0417		-.0015		-.1109	

AMES 11-073(OA148) -140A/B/C/R ORP LEFT WING BOT (XEBL62) (05 AUG 75)

REFERENCE DATA

SREF = 2690.0000 SQ.FT. XMRP = 1076.6800 IN. XO
LREF = 474.8000 IN. YMRP = .0000 IN. YO
BREF = 935.0000 IN. ZMRP = 375.0000 IN. ZO
SCALE = .0300

PARAMETRIC DATA

RUDDER = 5.000 SPDBRK = 55.000
BDFLAP = 16.300 L-ELVN = -4.000
R-ELVN = -4.000 MACH = 1.400

ALPHA (1) = -4.059 BETA (1) = -3.849 MACH = 1.3925 Q = 599.99 P = 442.06 RN/L = 2.9210

SECTION (1)LEFT WING BOT SURF DEPENDENT VARIABLE CP

2Y/BW	.2990	.3640	.4270	.5340	.6730	.7890	.8870	.9720
X/CW								
.010	-.1781	-.2484	-.1358	-.2775	-.3618	-.2237	-.1944	
.020	.0000	-.2399	-.2500	-.4159	-.4010	-.4143	-.4051	-.4593
.040		-.2325	-.3103					
.050	-.1607			-.4488	-.4299	-.4470	-.4380	
.069								-.4946
.080				-.4465				
.081			-.1930					
.086		-.1267						
.094	-.1400							
.150				-.4052	-.3932	-.3963	-.4008	
.157								-.3094
.163		-.0383						
.177			-.1772					
.229	-.1095							
.245		-.1168						
.250				-.2202	-.3652	-.3603	-.3710	
.274			-.1637					
.345								-.4223
.350		-.1433						
.400				-.1769	-.3152		-.3326	
.402			-.1526					
.503								-.3431
.550				-.1415	-.1631			
.565			-.2828					
.600							-.3217	
.637		-.0979						
.650						-.3229		
.670								-.5132
.700					-.2067			
.725				-.1747				
.750						-.3719	-.4394	
.760			-.1734					
.775				-.3163	-.3079			
.798		-.1458						
.808			-.3278					
.834	-.1838							
.839		-.3328						
.850				-.3817	-.2868	-.4060		

AMES 11-073(OA148) -140A/B/C/R ORB LEFT WING BOT (XEBL62)

ALPHA (1) = -4.059 BETA (1) = -3.849

SECTION (1)LEFT WING BOT SURF DEPENDENT VARIABLE CP

2Y/BW	.2990	.3640	.4270	.5340	.6730	.7800	.8870	.9720
X/CW								
.857			-.3585					
.862								
.865	-.3323							-.5313
.879		-.3406						
.900	-.2425							
.905				-.4134			-.5043	
.919			-.4348					
.950		-.3307						
.953				-.3068	-.4446	-.4415		
.955			-.2218					
.965	-.3410	-.2312						
1.000			-.1391		-.2157		-.3596	

ALPHA (1) = -3.922 BETA (2) = .195 MACH = 1.3925 Q = 593.99 P = 442.06 RN/L = 2.9210

SECTION (1)LEFT WING BOT SURF DEPENDENT VARIABLE CP

2Y/BW	.2990	.3640	.4270	.5340	.6730	.7800	.8870	.9720
X/CW								
.010	-.0983	-.1058	-.0531	-.2706	-.3733	-.2557	-.2366	
.020	.0000	-.1141	-.1184	-.4078	-.4090	-.4355	-.4298	-.4985
.040		-.1086	-.1685					
.050	-.1013							
.069				-.4249	-.4350	-.4651	-.4587	
.080								-.5129
.081				-.3878				
.086			-.1494					
.094	-.0930	-.0509						
.150								
.157				-.3007	-.3936	-.4087	-.4210	
.163		.0180						-.3234
.177								
.229	-.0691		-.1291					
.246								
.250		-.0769						
.274				-.1544	-.3519	-.3663	-.3926	
.345			-.1255					
.390		-.0959						-.4592
.400								
.402				-.1373	-.1524		-.3445	
.503			-.1099					
.550								-.3594
.565				-.1034	-.1348			
.600			-.3010					
							-.3272	

AMES 11-073(OA148) -140A/B/C/R ORB LEFT WING BOT (XE8L62)

ALPHA (1) = -3.922 BETA (2) = .195

SECTION (1)LEFT WING BOT SURF DEPENDENT VARIABLE CP

2Y/BW	.2990	.3640	.4270	.5340	.6730	.7800	.8870	.9720
X/CW								
.637		-.0750						
.650						-.1765		
.670								-.5000
.700					-.1678			
.725				-.1567				
.750						-.3340	-.4113	
.760			-.1648					
.775				-.3054	-.2737			
.798		-.1437						
.809			-.3121					
.834	-.1579							
.839		-.3152						
.850				-.3681	-.2751	-.3843		
.857			-.3476					
.862								-.5493
.865	-.2990							
.879		-.3213						
.900	-.2348			-.4043			-.4272	
.905			-.4088					
.919		-.3213						
.950				-.4053	-.4420	-.4058		
.953			-.2984					
.955		-.3421						
.965	-.3705							
1.000			-.1548		-.2315		-.2582	

ALPHA (1) = -3.930 BETA (3) = 4.280 MACH = 1.3925 Q = 599.99 P = 442.06 RN/L = 2.9210

SECTION (1)LEFT WING BOT SURF DEPENDENT VARIABLE CP

2Y/BW	.2990	.3640	.4270	.5340	.6730	.7800	.8870	.9720
X/CW								
.010	-.0767	-.0321	.0479	-.2624	-.3817	-.2915	-.2726	
.020	.0000	-.0453	.0125	-.3875	-.4220	-.4522	-.4566	-.5195
.040		-.0389	-.0735					
.050	-.0772			-.3479	-.4424	-.4756	-.4821	
.069								-.5183
.080				-.3335				
.081			-.0941					
.086		-.0040						
.094	-.0863							
.150				.1806	-.3795	-.4141	-.4334	
.157								-.3291
.163		.0492						

AMES 11-073(OA148) -140A/B/C/R ORG LEFT WING BOT (XEBL62)

ALPHA (1) = -3.930 BETA (3) = 4.280

SECTION (1)LEFT WING BOT SURF DEPENDENT VARIABLE CP

2Y/BW	.2990	.3640	.4270	.5340	.6730	.7800	.8870	.9720
X/CW								
.177			-.0939					
.229	-.0518							
.246		-.0430						
.250				-.1323	-.1757	-.3611	-.4015	
.274			-.0861					
.345								-.3901
.330		-.0619						
.400				-.1035	-.1268		-.3508	
.402			-.0806					
.503								-.3301
.550				-.0856	-.1007			
.565			-.2869					
.600							-.1526	
.637		-.0602						
.650						-.1418		
.670								-.4377
.700					-.1471			
.725				-.1419				
.750						-.3167	-.3040	
.760			-.1529					
.775				-.3010	-.2616			
.798		-.1408						
.808			-.3126					
.834	-.1649							
.839		-.3009						
.850				-.3585	-.2614	-.3687		
.857			-.3359					
.862								-.4325
.865	-.3011							
.879		-.3141						
.900	-.2384			-.3997			-.3941	
.905			-.3937					
.919		-.3211						
.950				-.4063	-.4027	-.3905		
.953			-.3450					
.955		-.3367						
.965	-.3947							
1.000			-.1447		-.2337		-.1476	

AMES 11-073(OA148) -140A/B/C/R ORB LEFT WING BOT (XE8L62)

ALPHA (2) = .024 BETA (1) = -3.867 MACH = 1.3922 Q = 599.78 P = 442.06 RN/L = 2.9172

SECTION (1)LEFT WING BOT SURF DEPENDENT VARIABLE CP

2Y/BW	.2930	.3640	.4270	.5340	.6730	.7800	.8870	.9720
X/CW								
.010	.0015	.0161	.2123	-.0852	-.1805	-.1044	-.0177	
.020	.0000	-.0172	.1525	-.2161	-.2260	-.2376	-.2547	-.2152
.040		-.0170	.0099					
.050	-.0299			-.2199	-.2331	-.2677	-.2705	
.069								-.2437
.080				-.1756				
.081			-.0365					
.086		.0277						
.094	-.0470							
.150				-.1246	-.1792	-.1980	-.2195	
.157								-.1882
.163		.0997						
.177			-.0396					
.229	-.0402							
.246		-.0113						
.250				-.0578	-.1318	-.1549	-.1868	
.274			-.0467					
.345								-.1650
.340		-.0333						
.400				-.0569	-.0453		-.1463	
.402			-.0471					
.503								-.1677
.550				-.0368	-.0482			
.565			-.3539					
.600							-.1103	
.637		-.0203						
.650						-.0876		
.670								-.3057
.700					-.1131			
.745				-.0989				
.750						-.2724	-.2636	
.760			-.1136					
.775				-.2721	-.2839			
.798		-.1014						
.808			-.2661					
.834	-.1289							
.839		-.2949						
.850				-.3332	-.2254	-.3459		
.857			-.3111					
.862								-.3361
.865	-.2841							
.879		-.3124						
.900	-.1761			-.3820			-.3877	
.905			-.3910					
.919		-.2970						

AMES 11-073(OA148) -140A/B/C/R ORB LEFT WING BOT (XE8L62)

ALPHA (2) = .024 BETA (1) = -3.867

SECTION (1)LEFT WING BOT SURF DEPENDENT VARIABLE CP

2Y/BW	.2990	.3640	.4270	.5340	.6730	.7800	.8870	.9720
X/CW								
.950				-.3881	-.3264	-.4037		
.953			-.2441					
.955		-.2887						
.965	-.2935							
1.000			-.1117		-.2247		-.3704	

ALPHA (2) = .029 BETA (2) = .185 MACH = 1.3922 Q = 599.78 P = 442.06 RN/L = 2.9172

SECTION (1)LEFT WING BOT SURF DEPENDENT VARIABLE CP

2Y/BW	.2990	.3640	.4270	.5340	.6730	.7800	.8870	.9720
X/CW								
.010	-.0167	-.0006	.2447	-.0776	-.1937	-.1399	-.0630	
.020	.0000	-.0068	.2205	-.1808	-.2298	-.2550	-.2844	-.2429
.040		.0023	.0701					
.050	-.0266			-.1066	-.1883	-.2619	-.2970	
.069								-.2524
.080				-.1009				
.081			.0092					
.086		.0447						
.094	-.0401							
.150				-.0724	-.1328	-.1745	-.2156	
.157								-.1840
.153		.1168						
.177			-.0152					
.229	-.0420							
.246		.0113						
.250				-.0379	-.0535	-.1147	-.1852	
.274			-.0167					
.345								-.1197
.390		-.0094						
.400				-.0343	-.0364		-.0672	
.402			-.0259					
.503								-.0931
.550				-.0162	-.0285			
.565			-.3657					
.600							-.0808	
637		-.0053						
.650						-.0698		
.670								-.2828
.700					-.0962			
.725				-.0905				
.750						-.2707	-.2631	
.760			-.1063					

AMES 11-073(OA148) -140A/B/C/R ORB LEFT W.'G (XEBL62)

ALPHA (2) = .029 BETA (2) = .185

SECTION (1)LEFT WING BOT SURF DEPENDENT VARIABLE CP

2Y/BW	.2990	.3640	.4270	.5340	.6730	.7800	.8870	.9720
X/CW								
.775				-.2663	-.2731			
.798		-.0995						
.808			-.2524					
.834	-.1144							
.839		-.2771						
.850				-.3226	-.2163	-.3353		
.857			-.3060					
.862								-.3343
.865	-.2707							
.879		-.3003						
.900	-.1725			-.3691			-.3904	
.905			-.3790					
.919		-.2802						
.950				-.3931	-.3426	-.3913		
.953			-.3638					
.955		-.2979						
.965	-.3274							
1.000			-.1238		-.2033		-.3258	

ALPHA (2) = .025 BETA (3) = 4.257 MACH = 1.3922 Q = 599.78 P = 442.06 RN/L = 2.9172

SECTION (1)LEFT WING BOT SURF DEPENDENT VARIABLE CP

2Y/BW	.2990	.3640	.4270	.5340	.6730	.7800	.8870	.9720
X/CW								
.010	-.0764	-.0670	.2679	-.0232	-.1763	-.1578	-.0930	
.020	.0000	-.0358	.2473	-.0135	-.1162	-.2474	-.2934	-.1946
.040		-.0207	.1149					
.050	-.0538			-.0803	-.1848	-.2301	-.2886	
.060								-.1878
.080				-.0609				
.081			.0440					
.086		.0424						
.094	-.0533							
.150				-.0417	-.0807	-.1285	-.2029	
.157								-.1660
.163		.1188						
.177			.0059					
.[illegible]	-.0490							
.246		.0264						
.250				-.0155	-.0381	-.0405	-.0683	
.274			.0100					
.345								-.0639
.490		.0122						

AMES 11-073(OA148) -140A/B/C/R ORB LEFT WING BOT (XEBL62)

ALPHA (2) = .025 BETA (3) = 4.257

SECTION (1)LEFT WING BOT SURF DEPENDENT VARIABLE CP

2Y/BW	.2990	.3640	.4270	.5340	.6730	.7800	.8870	.9720
X/CW								
.400				-.0060	-.0106		-.0503	
.402			-.0030					
.503								-.0952
.550				-.0084	-.0073			
.565			-.3546					
.600							-.0643	
.637		.0063						
.650						-.0521		
.670								-.3043
.700					-.0821			
.725				-.0805				
.750						-.2670	-.2547	
.760			-.0979					
.775				-.2570	-.2591			
.798		-.0983						
.808			-.2522					
.834	-.1094							
.839		-.2640						
.850				-.3145	-.2134	-.3274		
.857			-.2981					
.862								-.3386
.865	-.2671							
.879		-.2839						
.900	-.1801			-.3613			-.3872	
.905			-.3622					
.919		-.2711						
.950				-.3987	-.3334	-.3773		
.953			-.3537					
.955		-.2933						
.965	-.3560							
1.000			-.1125		-.2066		-.2365	

ALPHA (3) = 3.958 BETA (1) = -3.867 MACH = 1.3919 Q = 599.88 P = 442.29 RN/L = 2.9189

SECTION (1)LEFT WING BOT SURF DEPENDENT VARIABLE CP

2Y/BW	.2990	.3640	.4270	.5340	.6730	.7800	.8870	.9720
X/CW								
.010	.0523	.0115	.3993	.2544	.1831	.1807	.2108	
.020	.0000	.0328	.3752	.1791	.1705	.0897	.0400	.0910
.040		.0501	.2104					
.050	.0493			.0500	.0216	.0234	.0337	
.069								.0569
.080				.0519				

AMES 11-073(OA148) -140A/B/C/R ORB LEFT WING BOT (XEBL62)

ALPHA (3) = 3.958 BETA (1) = -3.867

SECTION (1)LEFT WING BOT SURF DEPENDENT VARIABLE CP

2Y/BW	.2990	.3640	.4270	.5340	.6730	.7800	.8870	.9720
X/CW								
.081			.1276					
.085		.1085						
.094	.0248							
.150				.0509	.0612	.0689	.0806	
.157								-.0677
.163		.2016						
.177			.0867					
.229	.0244							
.246		.0799						
.250				.0751	.0709	.0857	.0671	
.274			.0704					
.345								.0348
.330		.0693						
.400				.0685	.0783		.0619	
.402			.0654					
.503								-.0043
.550				.0715	.0818			
.565			-.3931					
.600							.0083	
.637		.0617						
.650						.0253		
.670								-.2496
.700					-.0215			
.725				-.0213				
.750						-.2095	-.1913	
.760			-.0472					
.775				-.2374	-.2275			
.788		-.0492						
.808			-.2089					
.834	-.0670							
.839		-.2543						
.850				-.2765	-.2707	-.2847		
.857			-.2647					
.862								-.3057
.865	-.2366							
.879		-.2796						
.900	-.1208			-.3393			-.3474	
.905			-.3430					
.919		-.2633						
.950				-.3736	-.2854	-.3631		
.943			-.3551					
.955		-.2477						
.965	-.2572							
1.000			-.1018		-.2270		-.3915	

AMES 11-073(OA148) -140A/B/C/R ORB LEFT WING BOT (XE8L62)

ALPHA (3) = 3.958 BETA (2) = .187 MACH = 1.3919 Q = 599.88 P = 442.29 RN/L = 2.9189

SECTION (11LE) WING BOT SURF DEPENDENT VARIABLE CP

2Y/BW	.2990	.3640	.4270	.5340	.6730	.7800	.8870	.9720
X/CW								
.010	-.0325	-.1488	.3457	.3815	.2016	.1897	.2020	
.020	.0000	-.0585	.3507	.2228	.1764	.1104	.0579	.0600
.040		-.0296	.2277					
.050	.0090			.1033	.0595	.0853	.0465	
.069								
.080				.0[illegible]37				.0365
.081			.1441					
.086		.0623						
.094	.0025							
.150				.0719	.0812	.0905	.1039	
.157								
.163		.1777						-.0790
.177			.0941					
.229	.0039							
.246		.0874						
.250				.0889	.0843	.0926	.0678	
.274			.0908					
.345								
.390		.0799						.0076
.400				.0790	.0919		.0619	
.402			.0714					
.503								
.550				.0780	.0883			-.0263
.565			-.3961					
.600								
.637		.0701					.0133	
.650								
.670						.0293		
.700								-.2746
.725					-.0207			
.750				-.0187				
.750						-.2313	-.1974	
.775			-.0349					
.798				-.2207	-.2193			
.808		-.0397						
.834			-.1936					
.839	-.0499							
.850		-.2291						
.857				-.2696	-.2571	-.2922		
.862			-.2607					
.875	-.2208							-.3445
.879		-.2605						
.900	-.1264			-.3225			-.3539	
.905			-.3286					
.919		-.2390						

AMES 11-073(OA148) -140A/B/C/R ORB LEFT WING BOT (XE8L62)

ALPHA (3) = 3.958 BETA (2) = .187

SECTION (1)LEFT WING BOT SURF DEPENDENT VARIABLE CP

2Y/BW	.2990	.3640	.4270	.5340	.6730	.7800	.8870	.9720
X/CW								
.950				-.3718	-.2804	-.3672		
.953			-.3400					
.955		-.2395						
.955	-.2763							
1.000			-.0951		-.1956		-.3712	

ALPHA (3) = 3.963 BETA (3) = 4.246 MACH = 1.3919 Q = 599.88 P = 442.29 RN/L = 2.9189

SECTION (1)LEFT WING BOT SURF DEPENDENT VARIABLE CP

2Y/BW	.2990	.3640	.4270	.5340	.6730	.7800	.8870	.9720
X/CW								
.010	-.1678	-.3901	.2582	.3373	.2335	.2191	.2413	
.020	.0000	-.1936	.2968	.2669	.2077	.1565	.1232	.0013
.040		-.1470	.2270					
.060	-.0541			.1599	.1023	.1181	.1130	
.069								.0004
.080				.1380				
.081			.1494					
.086		-.0123						
.094	-.0345							
.150				.0913	.1114	.1188	.1224	
.157								-.0946
.163		.1401						
.177			.0985					
.229	-.0237							
.246		.0819						
.250				.0983	.0993	.1063	.0802	
.274			.1028					
.345								-.0069
.390		.0866						
.400				.0938	.1190		.0795	
.402			.0874					
.503								-.0329
.550				.0818	.0948			
.565			-.4024					
.600							.0224	
.637		.0816						
.650						.0392		
.670								-.2979
.700					-.0090			
.715				-.0109				
.750						-.2329	-.2017	
.760			-.0292					

AMES 11-073(OA148) -140A/B/C/R ORB LEFT WING BOT (XEBL62)

ALPHA (3) = 3.953 BETA (3) = 4.246

SECTION (1)LEFT WING BOT SURF DEPENDENT VARIABLE CP

2Y/BW	.2990	.3640	.4270	.5340	.6730	.7800	.8870	.9720
X/CW								
.775				-.1945	-.2062			
.798		-.0432						
.808			-.1965					
.834	-.0460							
.839		-.2086						
.850				-.2658	-.2493	-.2886		
.857			-.2472					
.862								-.3770
.865	-.2181							
.879		-.2490						
.900	-.1263			-.3127			-.3478	
.905			-.3179					
.919		-.2206						
.950				-.3708	-.2619	-.3580		
.953			-.3070					
.955		-.2391						
.965	-.2946							
1.000			-.1052		-.1723		-.2398	

ALPHA (4) = 7.927 BETA (1) = -3.866 MACH = 1.3932 Q = 600.00 P = 441.59 RN/L = 2.9182

SECTION (1)LEFT WING BOT SURF DEPENDENT VARIABLE CP

2Y/BW	.2990	.3640	.4270	.5340	.6730	.7800	.8870	.9720
X/CW								
.010	.0104	-.1242	.4303	.5121	.4571	.5139	.5383	
.020	.0000	.0060	.4575	.3834	.4035	.4075	.4006	.1386
.040		.0411	.3520					
.050	.0074			.2787	.2765	.3145	.3554	
.069								.1533
.090				.2465				
.081			.2625					
.085		.1545						
.094	.0807							
.150				.1954	.2546	.2837	.2906	
.157								-.0337
.163		.2848						
.177			.1967					
.229	.0835							
.246		.1746						
.250				.2037	.2254	.2472	.2202	
.274			.1925					
.345								
.333		.1732						.1288

AMES 11-073(OA148) -140A/B/C/R ORB LEFT WING BOT (XEBL62)

ALPHA (4) = 7.927 BETA (1) = -3.866

SECTION (1)LEFT WING BOT SURF DEPENDENT VARIABLE CP

2Y/BW	.2990	.3640	.4270	.5340	.6730	.7800	.8870	.9720
X/CW								
.400				.1933	.2496		.2031	
.402			.1745					
.503								.0937
.550				.1823	.1972			
.565			-.4379					
.637		.1571					.1225	
.650						.1315		
.670								.2129
.700					.0637			
.725				.0582				
.750						-.1630	-.1268	
.760			.0339					
.775				-.1806	-.1619			
.794		.0252						
.814			-.1355					
.844	.0027							
.839		-.1944						
.850				-.2166	-.2589	-.2369		
.857			-.2167					
.862								
.865	-.1825							-.2977
.879		-.2265						
.900	-.1132			-.2837			-.2956	
.905			-.2907					
.919		-.2433						
.950				-.3343	-.3219	-.3163		
.953			-.3071					
.955		-.1899						
.965	-.1594							
1.000			-.0863		-.2522		-.3425	

ALPHA (4) = 7.932 BETA (2) = .179 MACH = 1.3932 Q = 600.00 P = 441.59 RN/L = 2.9182

SECTION (1)LEFT WING BOT SURF DEPENDENT VARIABLE CP

2Y/BW	.2990	.3640	.4270	.5340	.6730	.7800	.8870	.9720
X/CW								
.010	-.1289	-.3369	.2881	.5253	.4722	.5317	.5293	
.020	.0000	-.1223	.3583	.4219	.4181	.4351	.4204	.0275
.040		-.0593	.3250					
.050	.0252			.3202	.2928	.3323	.3686	
.059								.0678
.080				.2750				

AMES 11-073(OA148) -140A/B/C/R ORB LEFT WING BOT (XE8L62)

ALPHA (4) = 7.932 BETA (2) = .179

SECTION (1)LEFT WING BOT SURF DEPENDENT VARIABLE CP

2Y/BW	.2990	.3640	.4270	.5340	.6730	.7800	.8870	.9720
X/CW								
.081			.2443					
.086		.0731						
.094	.0339							
.150				.2114	.2655	.2823	.2923	
.157								-.0523
.163		.2363						
.177			.1968					
.229	.0568							
.246		.1634						
.250				.2062	.2326	.2480	.2217	
.274			.1978					
.345								.0919
.390		.1769						
.400				.1934	.2430		.2146	
.402			.1793					
.503								.0548
.550				.1819	.1980			
.565			-.4411					
.600							.1073	
.637		.1639						
.650						.1279		
.670								-.2399
.700					.0679			
.725				.0619				
.750						.1708	-.1375	
.760			.0441					
.775				-.1481	-.1553			
.799		.0352						
.808			-.1248					
.834	.0241							
.839		-.1613						
.850				-.2120	-.2655	-.2382		
.857			-.2049					
.862								-.3323
.865	-.1657							
.879		-.2033						
.900	-.0919			-.2636			-.3063	
.905			-.2664					
.919		-.1965						
.950				-.3308	-.2998	-.3264		
.953			-.2903					
.955		-.1861						
.955	-.1454							
1.000			-.1094		-.2271		-.3528	

AMES 11-073(OA148) -140A/B/C/R ORB LEFT WING BOT (XEBL62)

ALPHA (4) = 7.933 BETA (3) = 4.245 MACH = 1.3932 Q = 600.00 P = 441.59 RN/L = 2.9182

SECTION (1)LEFT WING BOT SURF DEPENDENT VARIABLE CP

2Y/BW	.2330	.3640	.4270	.5340	.6730	.7800	.8870	.9720
X/CW								
.010	-.2871	-.4297	.0976	.4863	.4541	.5097	.5077	
.020	.0000	-.2227	.2147	.4204	.4145	.4385	.4251	-.1009
.040		-.1673	.2511					
.050	-.0566			.3204	.3110	.3331	.3700	
.069								-.0225
.080				.2616				
.081			.1990					
.086		.0031						
.094	-.0158							
.150				.2068	.2642	.2763	.2910	
.157								-.0810
.163		.1758						
.177			.1730					
.229	.0221							
.246		.1339						
.250				.1994	.2256	.2438	.2317	
.274			.1844					
.345								.0402
.390		.1541						
.400				.1959	.2372		.2194	
.402			.1749					
.503								.0161
.550				.1787	.1931			
.565			-.4292					
.600							.0986	
.637		.1642						
.650						.1334		
.670								-.2672
.700					.0715			
.725				.0615				
.750						-.1676	-.1428	
.760			.0432					
.775				-.1165	-.1500			
.799		.0265						
.808			-.1319					
.834	.0245							
.839		-.1508						
.850				-.2108	-.2597	-.2361		
.857			-.1898					
.862								-.3503
.865	-.1633							
.879		-.1985						
.900	-.0923			-.2650			-.3063	
.905			-.2683					
.919		-.1772						

AMES 11-073(OA148) -140A/B/C/R ORB LEFT WING BOT (XEBL62)

ALPHA (4) = 7.933 BETA (3) = 4.245

SECTION (1)LEFT WING BOT SURF DEPENDENT VARIABLE CP

2Y/BW	.2990	.3640	.4270	.5340	.6730	.7800	.8870	.9720
X/CW								
.950				-.3280	-.2884	-.3313		
.953			-.2589					
.955		-.1917						
.965	-.1664							
1.000			-.1453		-.1903		-.3432	

ALPHA (5) = 11.912 BETA (1) = -3.854 MACH = 1.3916 Q = 599.87 P = 442.53 RN/L = 2.9199

SECTION (1)LEFT WING BOT SURF DEPENDENT VARIABLE CP

2Y/BW	.2990	.3640	.4270	.5340	.6730	.7800	.8870	.9720
X/CW								
.010	-.1058	-.2803	.3717	.6798	.6595	.7252	.7256	
.020	.0000	-.0327	.4771	.5731	.6034	.6281	.6420	.0768
.040		.0234	.4547					
.050	.0993			.4712	.4898	.5189	.5563	
.069								.1521
.080				.4087				
.081			.3769					
.086		.1825						
.094	.1242							
.150				.3501	.4157	.4438	.4420	
.157								-.0005
.163		.3548						
.177			.3187					
.229	.1569							
.246		.2712						
.250				.3408	.3764	.3993	.3790	
.274			.3171					
.345								
.390		.2908						.1838
.400								
.402				.3204	.3804		.3513	
.503			.3024					
.550								.1588
.565				.2878	.3074			
.600			-.4502					
.637		.2534					.2089	
.650								
.670						.2300		
.700								-.1683
.725					.1592			
.750				.1476				
.770						-.0890	-.0556	
.800			.1206					

AMES 1' :0A148) -140A/B/C/R ON LEFT WING BOT (XE8L62)

ALPHA (5) = 11.912 BETA (1) = -3.8

SECTION (1)LEFT WING BOT SURF DEPENDENT VARIABLE CP

2Y/BW	.2990	.3640	.4270	.5340	.6730	.7800	.8870	.9720
X/CW								
.775				-.09				
.798		.1181						
.808			-.0617					
.834	.0951							
.839		-.1224						
.850				-.15				
.857			-.1575			-.1775		
.862								
.865	-.1164							-.2554
.879		-.1479						
.900	-.0097			-.2174				
.905			-.2213				-.2442	
.919		-.1543						
.950				-.2849	-.2704	-.2661		
.953			-.2445					
.955		-.1219						
.965	-.0729							
1.000			-.2466		-.2831		-.4187	

ALPHA (5) = 11.921 BETA (2) = .184 MACH = 1.3916 Q = 599.87 P = 442.53 RN/L = 2.9199

SECTION (1)LEFT WING BOT SURF DEPENDENT VARIABLE CP

2Y/BW	.2990	.3640	.4270	.5340	.6730	.7800	.8870	.9720
X/CW								
.010	-.2435	-.3799	.1923	.6222	.6136	.6665	.6651	
.020	.0000	-.1392	.3276	.5468	.5758	.6000	.6102	-.0733
.040		-.0772	.3749					
.050	.0255							
.060				.4575	.4811	.5015	.5360	
.080								.0461
.081				.3928				
.086			.3205					
.094		.1085						
.150	.0772							
.157				.3428	.4025	.4282	.4351	
.163								-.0418
.177		.2973						
.229			.2914					
.246	.1174							
.250		.2398						
.274				.3260	.3610	.3917	.3690	
.345			.3077					
.390		.2760						.1266

C-3

AMES 11-073(OA148) -140A/B/C/R ORB LEFT WING BOT (XE8L62)

ALPHA (5) = 11.921 BETA (2) = .184

SECTION (1)LEFT WING BOT SURF DEPENDENT VARIABLE CP

2Y/BW	.2990	.3640	.4270	.5340	.6730	.7800	.8870	.9720
X/CW								
.400				.3165	.3695		.3309	
.402			.2902					
.503								.1062
.550				.2812	.3030			
.565			-.4574					
.600							.1791	
.637		.2606						
.650						.2180		
.670								-.2076
.700					.1464			
.725				.1427				
.750						-.1006	-.0742	
.760			.1308					
.775				-.0583	-.0931			
.798		.1127						
.808			-.0603					
.834	.1042							
.839		-.0870						
.850				-.1519	-.2220	-.1771		
.857			-.1369					
.862								-.2969
.865	-.1039							
.879		-.1383						
.900	-.0291			-.2084			-.2553	
.905			-.2055					
.919		-.1340						
.950				-.2847	-.2706	-.2876		
.953			-.2240					
.955		-.1399						
.965	-.0743							
1.000			-.2334		-.2699		-.4469	

ALPHA (5) = 11.919 BETA (3) = 4.258 MACH = 1.3916 Q = 599.87 P = 442.53 RN/L = 2.9199

SECTION (1)LEFT WING BOT SURF DEPENDENT VARIABLE CP

2Y/BW	.2990	.3640	.4270	.5340	.6730	.7800	.8870	.9720
X/CW								
.010	-.3536	-.4410	-.0028	.5296	.5427	.5834	.5777	
.020	.0000	-.2366	.1712	.4962	.5287	.5566	.5626	-.1998
.040		-.1732	.2870					
.050	-.0455			.4195	.4459	.4681	.5059	
.069								-.0533
.080				.3628				

AMES 11-073(OA148) -140A/B/C/R ORB LEFT WING BOT (XE8L62)

ALPHA (5) = 11.919 BETA (3) = 4.258

SECTION (1)LEFT WING BOT SURF DEPENDENT VARIABLE CP

2Y/BW	.2990	.3640	.4270	.5340	.6730	.7800	.8870	.9720
X/CW								
.081			.2541					
.086		.0277						
.094	.0144							
.150				.3178	.3775	.4143	.4237	
.157								-.0808
.163		.2347						
.177			.2531					
.229	.0730							
.246		.1973						
.250				.3024	.3431	.3806	.3561	
.274			.2804					
.345								.0824
.390		.2439						
.400				.3067	.3557		.3144	
.402			.2766					
.503								.0655
.550				.2744	.2917			
.565			-.4515					
.600							.1700	
.637		.2529						
.650						.2094		
.670								-.2232
.700					.1473			
.725				.1343				
.750						-.1160	-.0898	
.760			.1197					
.775				-.0366	-.1020			
.798		.0985						
.808			-.0610					
.834	.0960							
.839		-.0860						
.850				-.1405	-.2151	-.1685		
.857			-.1198					
.862								-.3166
.865	-.1088							
.879		-.1354						
.900	-.0465			-.2075			-.2569	
.905			-.2046					
.919		-.1293						
.950				-.2730	-.2616	-.2915		
.953			-.1921					
.955		-.1522						
.965	-.1162							
1.000			-.2795		-.1880		-.4483	

AMES 11-073(OA148) -140A/B/C/R ORB LEFT WING BOT (XE8L62)

ALPHA (6) = 15.912 BETA (1) = -3.830 MACH = 1.3897 Q = 599.83 P = 443.71 RN/L = 2.9243

SECTION (1)LEFT WING BOT SURF DEPENDENT VARIABLE CP

2Y/BW	.2990	.3640	.4270	.5340	.6730	.7800	.8870	.9720
X/CW								
.010	-.2075	-.3204	.2890	.7652	.7776	.8039	.7959	
.020	.0000	-.0464	.4515	.7026	.7430	.7708	.7760	-.0207
.040		.0233	.5164					
.050	.1222			.6120	.6498	.6824	.7122	
.069								.1331
.080				.5485				
.081			.4686					
.086		.2289						
.094	.1738							
.150				.4965	.5591	.6120	.5834	
.157								-.0017
.163		.4430						
.177			.4337					
.229	.2243							
.246		.3584						
.250				.4626	.5200	.5624	.5104	
.274			.4352					
.345								.2369
.390		.4124						
.400				.4597	.5176		.4620	
.402			.4221					
.503								.2120
.550				.4097	.4218			
.565			-.4787					
.600							.2862	
.637		.3781						
.650						.3163		
.670								-.1344
.700					.2435			
.725				.2367				
.750						-.0331	-.0027	
.760			.2137					
.775				-.0051	-.0412			
.798		.2113						
.808			.0114					
.834	.1975							
.839		-.0500						
.850				-.1889	-.1709	-.1088		
.857			-.0942					
.862								-.2328
.865	-.0527							
.877		-.1011						
.900	-.0257			-.1623			-.2006	
.905			-.1568					
.919		-.1369						

AMES 11-073(OA149) -140A/B/C/R ORB LEFT WING BOT (XEBL62)

ALPHA (6) = 15.912 BETA (1) = -3.830

SECTION (1)LEFT WING BOT SURF DEPENDENT VARIABLE CP

2Y/BW	.2990	.3640	.4270	.5340	.6730	.7800	.8870	.9720
X/CW								
.950				-.2440	-.2264	-.2313		
.953			-.2013					
.955		-.1200						
.966	-.0513							
1.000			-.2629		-.3591		-.5200	

ALPHA (6) = 15.924 BETA (2) = .184 MACH = 1.3897 Q = 599.83 P = 443.71 RN/L = 2.9243

SECTION (1)LEFT WING BOT SURF DEPENDENT VARIABLE CP

2Y/BW	.2990	.3640	.4270	.5340	.6730	.7800	.8870	.9720
X/CW								
.010	-.3030	-.3950	.0996	.6597	.6923	.6922	.6795	
.020	.0000	-.1514	.2979	.6371	.6794	.7041	.6948	-.1498
.040		-.0913	.4307					
.050	.0467			.5703	.6180	.6342	.6605	
.063								.0239
.080				.5161				
.081			.3916					
.096		.1338						
.094	.1087							
.152				.4703	.5369	.5826	.5433	
.157								-.0491
.165		.3741						
.177			.3989					
.199	.1760							
.246		.3239						
.250				.4462	.4943	.5390	.4824	
.274			.4183					
.295								.1787
.330		.3864						
.370				.4417	.4981		.4334	
.402			.4086					
.543								.1635
.440				.4077	.4106			
.515			-.4978					
.600							.2632	
.637		.3890						
.652						.3004		
[illegible]								-.1648
[illegible]					.2516			
[illegible]				.2243				
[illegible]						-.0485	-.0228	
[illegible]			.2266					

AMES 11-073(OA148) -140A/B/C/R ORB LEFT WING BOT (XE8L62)

ALPHA (6) = 15.924 BETA (2) = .184

SECTION (1)LEFT WING BOT SURF DEPENDENT VARIABLE CP

2Y/BW	.2990	.3640	.4270	.5340	.6730	.7800	.8870	.9720
X/CW								
.775				.0338	-.0469			
.798		.2065						
.808			.0075					
.834	.1994							
.839		-.0244						
.850				-.0939	-.1777	-.1127		
.857			-.0763					
.862								-.2613
.865	-.0457							
.879		-.0833						
.900	.0052			-.1630			-.2059	
.905			-.1558					
.919.		-.0901						
.950				-.2421	-.2379	-.2501		
.953			-.1688					
.955		-.1083						
.965	-.0613							
1.000			-.3501		-.3192		-.5431	

ALPHA (6) = 15.916 BETA (3 = 4.288 MACH = 1.3897 Q = 599.83 P = 443.71 RN/L = 2.9243

SECTION (1)LEFT WING BOT SURF DEPENDENT VARIABLE CP

2Y/BW	.2990	.3640	.4270	.5340	.6730	.7800	.8870	.9720
X/CW								
.010	-.3793	-.4732	-.0821	.5318	.5777	.5645	.5551	
.020	.0000	-.2454	.1407	.5481	.5948	.6186	.6050	-.2457
.040		-.1748	.3180					
.050	-.0266			.5059	.5595	.5790	.5974	
.060								-.0581
.080				.4680				
.081			.3196					
.085		.0627						
.094	.0534							
.150				.4317	.5021	.5461	.5142	
.157								-.0879
.163		.2950						
.177			.3407					
.229	.1276							
.246		.2680						
.250				.4083	.4599	.5148	.4632	
.274			.3847					
.345								.1298
.330		.3492						

AMES 11-073(OA148) -140A/B/C/R ORB LEFT WING BOT (XE8L62)

ALPHA (6) = 15.916 BETA (3) = 4.288

SECTION (1)LEFT WING BOT SURF DEPENDENT VARIABLE CP

2Y/BW	.2990	.3640	.4270	.5340	.6730	.7800	.8870	.9720
X/CW								
.400				.4145	.4732		.4083	
.402			.3826					
.503								.1104
.550				.3915	.3929			
.565			-.4681					
.600							.2464	
.637		.3578						
.650						.2879		
.670								-.1855
.700					.2438			
.725				.2192				
.740						-.[illegible]	-.0358	
.760			.2107					
.775				.0402	-.0534			
.798		.1868						
.808			.0036					
.824	.1910							
.838		-.0244						
.850				-.0830	-.1565	-.1220		
.857			-.0612					
.862								-.2715
.865	-.0427							
.879		-.0748						
.900	.0122			-.1674			-.1979	
.905			-.1521					
.919		-.0755						
.950				-.2205	-.2373	-.2452		
.953			-.1337					
.955		-.1188						
.965	-.0946							
1.000			-.2681		-.2669		-.5085	

AMES 11-073(OA148) -140A/B/C/R ORB LEFT WING BOT (XE8L63) (05 AUG 75)

REFERENCE DATA

SREF = 2690.0000 SQ.FT. XMRP = 1076.6800 IN. XO
LREF = 474.8000 IN. YMRP = .0000 IN. YO
BREF = 960.0600 IN. ZMRP = 375.0000 IN. ZO
SCALE = .0300

PARAMETRIC DATA

RUDDER = 5.000 SPDBRK = 55.000
BDFLAP = 16.300 L-ELVN = -4.000
R-ELVN = -4.000 MACH = 1.250

ALPHA (1) = -4.050 BETA (1) = -3.840 MACH = 1.2459 Q = 600.11 P = 552.28 RN/L = 3.0241

SECTION (1)LEFT WING BOT SURF DEPENDENT VARIABLE CP

2Y/BW	.2990	.3640	.4270	.5340	.6730	.7800	.8870	.9728
X/CW								
.010	-.1562	-.2922	-.2060	-.4086	-.5123	-.3567	-.3304	
.020	.0000	-.2773	-.3135	-.5560	-.5514	-.5705	-.5637	-.6082
.040		-.2724	-.3450					
.050	-.1561			-.5791	-.5810	-.6051	-.5921	
.069								-.6622
.080				-.5405				
.081			-.2394					
.085		-.1455						
.094	-.1527							
.150				-.5007	-.5190	-.5343	-.5442	
.157								-.3871
.163		-.0530						
.177			-.2185					
.229	-.1343							
.246		-.1398						
.250				-.2448	-.4670	-.4828	-.5034	
.274			-.1996					
.345								-.5978
.390		-.1680						
.400				-.2007	-.2918		-.4482	
.402			-.1707					
.503								-.5870
.540				-.1441	-.1778			
.566			-.3819					
.600							-.4229	
.637		-.1117						
.650						-.2259		
.670								-.6348
.700					-.2202			
.725				-.1984				
.750						-.3927	-.5565	
.760			-.1736					
.775				-.3746	-.2961			
.799		-.1552						
.818			-.3916					
.834	-.2024							
.850		-.3894						
.850				-.4547	-.3570	-.4570		

AMES 11-073(OA148) -140A/B/C/R ORB LEFT WING BOT (XEBL63)

ALPHA (1) = -4.050 BETA (1) = -3.840

SECTION (1)LEFT WING BOT SURF DEPENDENT VARIABLE CP

2Y/BW	.2990	.3640	.4270	.5340	.6730	.7800	.8870	.9720
X/CW								
.857			-.4373					
.852								-.6740
.865	-.4006							
.879		-.3982						
.900	-.2855			-.4689			-.3575	
.905			-.5145					
.919		-.3930						
.950				-.3746	-.5745	-.3098		
.953			-.2415					
.955		-.2711						
.965	-.4124							
1.000			-.1622		-.2596		-.2845	

ALPHA (1) = -3.916 BETA (2) = .196 MACH = 1.2459 Q = 600.11 P = 552.28 PN/L = 3.0241

SECTION (1)LEFT WING BOT SURF DEPENDENT VARIABLE CP

2Y/BW	.2990	.3640	.4270	.5340	.6730	.7800	.8870	.9720
X/CW								
.010	-.0999	-.1322	-.0858	-.3996	-.5280	-.3963	-.3777	
.020	.0000	-.1419	-.1329	-.5469	-.5664	-.5923	-.5934	-.6575
.040		-.1299	-.1992					
.050	-.1138			-.5207	-.5878	-.6219	-.6226	
.069								-.6847
.090				-.4914				
.081			-.1866					
.086		-.0679						
.094	-.1126							
.150				-.2781	-.5042	-.5433	-.5686	
.157								-.4075
.163		.0059						
.177			-.1651					
.229	-.0882							
.246		-.0970						
.250				-.1806	-.3823	-.4900	-.5246	
.274			-.1369					
.345								-.6174
[illegible]		-.1043						
.400				-.1406	-.1666		-.4623	
.402			-.1144					
.503								-.5026
[illegible]				-.1143	-.1328			
[illegible]			-.4145					
.600							-.3080	

AMES 11-073(OA148) -140A/B/C/R ORB LEFT WING BOT (XE8L63)

ALPHA (1) = -3.916 BETA (2) = .196

SECTION (1)LEFT WING BOT SURF DEPENDENT VARIABLE CP

2Y/BW	.2990	.3640	.4270	.5340	.6730	.7800	.8870	.9720
X/CW								
.637		-.0873						
.650						-.1717		
.670								-.6517
.700					-.1946			
.725				-.1868				
.750						-.3493	-.4028	
.760			-.1883					
.775				-.3813	-.3409			
.798		-.1651						
.808			-.3904					
.834	-.1898							
.839		-.3861						
.850				-.4451	-.3248	-.4549		
.857			-.4287					
.862								-.5463
.865	-.3761							
.879		-.3906						
.900	-.2945			-.4936			-.4798	
.905			-.4990					
.919		-.3925						
.950				-.4742	-.5276	-.4102		
.953			-.3338					
.955		-.4173						
.955	-.4630							
1.000			-.2006		-.2867		-.1614	

ALPHA (1) = -3.923 BETA (3) = 4.275 MACH = 1.2459 Q = 600.11 P = 552.28 RN/L = 3.0241

SECTION (1)LEFT WING BOT SURF DEPENDENT VARIABLE CP

2Y/BW	.2990	.3640	.4270	.5340	.6730	.7800	.8870	.9720
X/CW								
.010	-.0930	-.0451	.0176	-.3896	-.5400	-.4279	-.4157	
.020	.0000	-.0590	.0127	-.5250	-.5740	-.6111	-.6167	-.6882
.040		-.0493	-.0334					
.060	-.1040			-.4462	-.5882	-.6355	-.6423	
.080								-.6842
.080				-.3643				
.081			-.1083					
.086		-.0058						
.094	-.0963							
.150				-.2051	-.4617	-.5437	-.5711	
.157								-.4031
.163		.0612						

AMES 11-073(OA148) -140A/B/C/R ORB LEFT WING BOT (XEBL63)

ALPHA (1) = -3.923 BETA (3) = 4.275

SECTION (1)LEFT WING BOT SURF DEPENDENT VARIABLE CP

2Y/BW	.2990	.3640	.4270	.5340	.6730	.7800	.8870	.9720
X/CW								
.177			-.1102					
.229	-.0643							
.246		-.0446						
.250				-.1409	-.1859	-.3977	-.5325	
.274			-.0870					
.345								-.6181
.390		-.0593						
.400				-.1025	-.1281		-.3379	
.402			-.0835					
.503								-.5388
.560				-.0939	-.1087			
.565			-.3369					
.600							-.1521	
.637		-.0773						
.650						-.1555		
.670								
.700								-.4000
.725					-.1822			
.750				-.1836				
.763						-.3306	-.3820	
.775			-.1670					
.799				-.3839	-.3805			
.808		-.1752						
.834	-.1977		-.3913					
.839		-.3786						
.850				-.4434	-.3068	-.4551		
.857			-.4159					
.862								
.865	-.3812							-.4220
.879		-.3819						
.900	-.2948			-.5013			-.4594	
.905			-.4832					
.919		-.3937						
.950				-.4672	-.4968	-.4655		
.953			-.3764					
.955		-.4146						
.965	-.4916							
1.000			-.1872		-.2885		-.1763	

AMES 11-073(OA148) -140A/B/C/R ORB LEFT WING BOT (XE8L63)

ALPHA (2) = .044 BETA (1) = -3.864 MACH = 1.2451 Q = 599.58 P = 552.51 RN/L = 3.0238

SECTION (1)LEFT WING BOT SURF DEPENDENT VARIABLE CP

2Y/BW	.2990	.3640	.4270	.5340	.6730	.7800	.8870	.9720
X/CW								
.010	.0032	.0087	.2037	-.1836	-.2965	-.2203	-.1312	
.020	.0000	-.0246	.1715	-.3274	-.3556	-.3652	-.3947	-.3266
.040		-.0232	-.0155					
.050	-.0334			-.2464	-.3411	-.3814	-.4047	
.069								-.3605
.080				-.2145				
.081			-.0532					
.085		.0208						
.094	-.0612							
.150				-.1432	-.2305	-.2744	-.3212	
.157								-.2323
.163		.0904						
.177			-.0662					
.229	-.0626							
.246		-.0289						
.250				-.0892	-.0982	-.2033	-.2688	
.274			-.0634					
.345								-.2245
.370		-.0450						
.400				-.0681	-.0681		-.1145	
.402			-.0570					
.503								-.1452
.550				-.0362	-.0503			
.565			-.4196					
.600							-.1095	
.637		-.0237						
.650						-.0966		
.670								-.3440
.700					-.1264			
.725				-.1191				
.750						-.3152	-.3345	
.760			-.1177					
.775				-.3264	-.2725			
.798		-.0971						
.828			-.3279					
.844	-.1403							
[illegible]		-.3430						
[illegible]				-.4028	-.2808	-.4174		
.857			-.3869					
.872								-.4099
[illegible]	-.3493							
[illegible]		-.3565						
[illegible]	-.2088			-.4296			-.4679	
.905			-.4675					
.919		-.3399						

AMES 11-073(OA148) -140A/B/C/R ORB LEFT WING BOT (XEBL63)

ALPHA (2) = .044 BETA (1) = -3.864

SECTION (1)LEFT WING BOT SURF DEPENDENT VARIABLE CP

2Y/BW	.2990	.3540	.4270	.5340	.6730	.7800	.8870	.9720
X/CW								
.950				-.4009	-.4191	-.4527		
.953			-.2480					
.955		-.3073						
.965	-.3536							
1.000			-.1177		-.2313		-.1932	

ALPHA (2) = .050 BETA (2) = .180 MACH = 1.2451 Q = 599.58 P = 552.51 RN/L = 3.0238

SECTION (1)LEFT WING BOT SURF DEPENDENT VARIABLE CP

2Y/BW	.2990	.3540	.4270	.5340	.6730	.7800	.8870	.9720
X/CW								
.010	-.0387	.0021	.2614	-.1636	-.3119	-.2583	-.1843	
.020	.0000	-.0071	.2261	-.1921	-.2979	-.3804	-.4225	-.3262
.040		.0016	.0528					
.050	-.0520			-.1756	-.2823	-.3657	-.4253	
.069								-.3220
.080				-.1508				
.081			-.1019					
.086		.0471						
.094	-.0649							
.150				-.1027	-.1517	-.2393	-.3241	
.157								-.2207
.163		.1153						
.177			-.0353					
.229	-.0469							
.246		-.0007						
.250				-.0517	-.0822	-.0847	-.1184	
.274			-.0185					
.345								-.0998
.390		-.0003						
.400				-.0270	-.0268		-.0847	
.402			-.0187					
.503								-.1429
.550				-.0141	-.0272			
.565			-.4700					
.600							-.0895	
.637		-.0057						
.650						-.0771		
.670								-.3493
.700					-.1133			
.725				-.1099				
.750						-.3140	-.3291	
.760			-.1177					

AMES 11-073(OA148) -140A/B/C/R ORB LEFT WING BOT .XE8L63)

ALPHA (2) = .050 BETA (2) = .180

SECTION (1)LEFT WING BOT SURF DEPENDENT VARIABLE CP

2Y/BW	.2990	.3640	.4270	.5340	.6730	.7800	.8870	.9720
X/CW								
.775				-.3304	-.3008			
.798		-.1124						
.808			-.3239					
.834	-.1357							
.839		-.3369						
.850				-.3970	-.2745	-.4117		
.857			-.3791					
.862								-.3986
.865	-.3403							
.879		-.3476						
.900	-.2162			-.4499			-.4691	
.905			-.4565					
.919		-.3336						
.950				-.4568	-.4916	-.4309		
.953			-.3384					
.955		-.3691						
.965	-.4007							
1.000			-.1480		-.2309		-.1497	

ALPHA (2) = .046 BETA (3) = 4.256 MACH = 1.2451 Q = 599.58 P = 552.51 RN/L = 3.0239

SECTION (1)LEFT WING BOT SURF DEPENDENT VARIABLE CP

2Y/BW	.2990	.3640	.4270	.5340	.6730	.7800	.8870	.9720
X/CW								
.010	-.1235	-.0603	.2912	-.0486	-.2630	-.2643	-.1947	
.020	.0000	-.0371	.2630	-.0576	-.1760	-.3465	-.4210	-.1861
.040		-.0200	.1196					
.050	.0853			-.1074	-.2282	-.2730	-.3448	
.069								-.1812
.080				-.0743				
.081			.0513					
.086		.0487						
.094	-.0907							
.150				-.0613	-.0855	-.0985	-.1145	
.157								-.1434
.163		.1319						
.177			.0005					
.229	-.0568							
.246		.0347						
.250				-.0170	-.0426	-.0551	-.0898	
.274			.0117					
.345								-.0948
.340		.0240						

AMES 11-073(OA148) -140A/B/C/R ORB LEFT WING BOT (XEBL63)

ALPHA (2) = .046 BETA (3) = 4.256

SECTION (1)LEFT WING BOT SURF DEPENDENT VARIABLE CP

2Y/BW	.2990	.3640	.4270	.5340	.6730	.7800	.8870	.9720
X/CW								
.400				.0011	.0096		-.0609	
.402			.0093					
.503								-.1207
.550				-.0029	-.0073			
.565			-.4051					
.600							-.0863	
.637		.0020						
.650						-.0639		
.670								-.3784
.700					-.1036			
.725				-.1057				
.750						-.3197	-.3387	
.760			-.1178					
.775				-.3333	-.3062			
.798		-.1117						
.808			-.3307					
.834	-.1314							
.839		-.3274						
.850				-.3943	-.2718	-.4152		
.857			-.3639					
.862								-.4237
.865	-.3378							
.879		-.3321						
.900	-.2246			-.4539			-.4829	
.905			-.4376					
.919		-.3295						
.950				-.4736	-.4637	-.4442		
.953			-.4141					
.956		-.3646						
.965	-.4343							
1.000			-.1393		-.2566		-.1539	

ALPHA (3) = 3.990 BETA (1) = -3.864 MACH = 1.2448 Q = 599.34 P = 552.51 RN/L = 3.0213

SECTION (1)LEFT WING BOT SURF DEPENDENT VARIABLE CP

2Y/BW	.2990	.3640	.4270	.5340	.6730	.7800	.8870	.9720
X/CW								
.010	.0354	-.0455	.4332	.2398	.1251	.1351	.1641	
.020	.0000	-.0026	.3944	.1284	.1139	.0522	.0033	.0747
.040		.0206	.2173					
.050	.0360			.0510	.0071	.0351	.0202	
.069								.0339
.080				.0533				

AMES 11-073(OA148) -140A/B/C/R ORB LEFT WING BOT (XE8L63)

ALPHA (3) = 3.990 BETA (1) = -3.864

SECTION (1)LEFT WING BOT SURF DEPENDENT VARIABLE CP

2Y/BW	.2990	.3640	.4270	.5340	.6730	.7800	.8870	.9720
X/CW								
.081			.1333					
.086		.0964						
.094	.0113							
.150				.0359	.0508	.0717	.0799	
.157								-.0855
.163		.2074						
.177			.0788					
.229	-.0039							
.246		.0798						
.250				.0686	.0662	.0752	.0425	
.274			.0715					
.345								.0107
.390		.0715						
.400				.0715	.0918		.0467	
.402			.0653					
.503								-.0288
.550				.0695	.0783			
.565			-.4769					
.600							-.0071	
.637		.0675						
.650						.0093		
.670								-.3202
.700					-.0463			
.725				-.0391				
.750						-.2767	-.2656	
.760			-.0475					
.775				-.2873	-.2788			
.798		-.0521						
.808			-.2507					
.834	-.0696							
.839		-.2886						
.850				-.3483	-.2558	-.3689		
.857			-.3285					
.862								-.3919
.865	-.2877							
.879		-.3228						
.900	-.1224			-.4110			-.4291	
.905			-.4062					
.919		-.2625						
.950				-.4376	-.3358	-.4526		
.953			-.2986					
.955		-.2959						
.945	-.3213							
1.000			-.0883		-.2207		-.2796	

AMES 11-073(OA148) -140A/B/C/R ORB LEFT WING BOT (XEBL63)

ALPHA (3) = 3.991 BETA (2) = .185 MACH = 1.2448 Q = 599.34 P = 552.51 RN/L = 3.0213

SECTION (1)LEFT WING BOT SURF DEPENDENT VARIABLE CP

2Y/BW	.2990	.3640	.4270	.5340	.6730	.7800	.8870	.9720
X/CW								
.010	-.0980	-.2287	.3683	.2849	.1654	.1630	.1971	
.020	.0000	-.1103	.3701	.1770	.1440	.0987	.0522	.0247
.040		-.0719	.2507					
.050	-.0223			.1114	.0460	.0702	.0607	
.069								.0048
.080				.0965				
.081			.1527					
.086		.0641						
.094	-.0234							
.150				.0668	.0973	.0942	.0847	
.157								-.0944
.163		.1998						
.177			.0970					
.229	-.0234							
.246		.0885						
.250				.0909	.0804	.0838	.0460	
.274			.1056					
.345								-.0039
.390		.0944						
.400				.0989	.1132		.0724	
.402			.0897					
.503								-.0454
.550				.0918	.0961			
.585			-.5078					
.600							-.0121	
.637		.0887						
.650						.0129		
.670								-.3567
.700					-.0443			
.725				-.0324				
.750						-.2987	-.2683	
.760			-.0469					
.775				-.2715	-.2846			
.798		-.0598						
.809			-.2479					
.834	-.0683							
.839		-.2773						
.850				-.3444	-.2535	-.3743		
.857			-.3226					
.862								-.4241
.865	-.2890							
.879		-.3084						
.900	-.1392			-.4059			-.4389	
.905			-.4011					
.919		-.2717						

AMES 11-073(OA148) -140A/B/C/R ORB LEFT WING BOT (XE8L63)

ALPHA (3) = 3.991 BETA (2) = .185

SECTION (1)LEFT WING BOT SURF DEPENDENT VARIABLE CP

2Y/BW	.2990	.3640	.4270	.5340	.6730	.7800	.8870	.9720
X/CW								
.950				-.4494	-.3375	-.4416		
.953			-.3833					
.955		-.2980						
.965	-.3535							
1.000			-.0962		-.2037		-.2488	

ALPHA (3) = 3.994 BETA (3) = 4.245 MACH = 1 2448 Q = 599.34 P = 552.51 RN/L = 3.0213

SECTION (1)LEFT WING BOT SURF DEPENDENT VARIABLE CP

2Y/BW	.2990	.3640	.4270	.5340	.6730	.7800	.8870	.9720
X/CW								
.010	-.2511	-.3613	.2767	.3483	.2094	.2370	.2512	
.020	.0000	-.2137	.3203	.2399	.1801	.1722	.1357	-.0440
.040		-.1684	.2637					
.050	-.0967			.1702	.0960	.1117	.1233	
.069								-.0305
.080				.1371				
.091			.1740					
.095		.0112						
.094	-.0752							
.150				.1010	.1240	.1198	.1117	
.157								-.1081
.163		.1777						
.177			.1133					
.229	-.0597							
.246		.0995						
.250				.1143	.0996	.1148	.0759	
.274			.1214					
.345								-.0405
.390		.1114						
.400				.1216	.1487		.0951	
.402			.1154					
.503								-.0802
.550				.0991	.1010			
.555			-.4558					
.600						-.0200		
.537		.0967						
.650					.0192			
.670								-.3849
[illegible]					-.0423			
.725				-.0339				
.750					-.3081	-.2778		
.760			-.0489					

AMES 11-073(OA148) -140A/B/C/R ORB LEFT WING BOT (XEBL63)

ALPHA (3) = 3.994 BETA (3) = 4.245

SECTION (1)LEFT WING BOT SURF DEPENDENT VARIABLE CP

2Y/BW	.2990	.3640	.4270	.5340	.6730	.7800	.8870	.9720
X/CW								
.775				-.2591	-.2784			
.798		-.0651						
.808			-.2590					
.834	-.0673							
.839		-.2657						
.850				-.3435	-.2682	-.3812		
.857			-.3010					
.862								-.4665
.865	-.2852							
.879		-.2903						
.900	-.1470			-.4062			-.4565	
.905			-.3845					
.919		-.2607						
.950				-.4621	-.3387	-.4460		
.953			-.3558					
.955		-.2967						
.965	-.3587							
1.000			-.1008		-.2039		-.2244	

ALPHA (4) = 7.968 BETA (1) = -3.863 MACH = 1.2457 Q = 599.38 P = 551.80 RN/L = 3.0207

SECTION (1)LEFT WING BOT SURF DEPENDENT VARIABLE CP

2Y/BW	.2990	.3640	.4270	.5340	.6730	.7800	.8870	.9720
X/CW								
.010	-.0362	-.2368	.3999	.5424	.4833	.5677	.5778	
.020	.0000	-.0620	.4552	.4111	.4260	.4473	.4609	.0849
.040		-.0181	.3738					
.050	.0672			.3105	.3138	.3476	.3799	
.069								.1248
.080				.2529				
.081			.2766					
.086		.1290						
.094	.0614							
.150				.2142	.2762	.3009	.2907	
.157								-.0430
.163		.2927						
.177			.2063					
.229	.0526							
.246		.1753						
.250				.2216	.2371	.2772	.2371	
.274			.2035					
.345								.0813
.390		.1845						

AMES 11-073(OA148) -140A/B/C/R ORB LEFT WING BOT (XEBL63)

ALPHA (4) = 7.968 BETA (1) = -3.863

SECTION (1)LEFT WING BOT SURF DEPENDENT VARIABLE CP

2Y/BW	.2990	.3640	.4270	.5340	.6730	.7800	.8870	.9720
X/CW								
.400				.2192	.2902		.2233	
.402			.1978					
.503								.0462
.550				.1993	.1896			
.565			-.5049					
.600							.0759	
.637		.1727						
.650						.1058		
.670								-.2870
.700					.0335			
.725				.0391				
.750						-.2271	-.1986	
.760			.0227					
.775				-.2252	-.2300			
.798		.0181						
.808			-.1958					
.834	.0080							
.839		-.2385						
.850				-.2942	-.3384	-.3244		
.857			-.2791					
.862								-.3555
.865	-.2340							
.879		-.2814						
.900	-.0834			-.3598			-.3880	
.905			-.3516					
.919		-.2323						
.950				-.4361	-.3804	-.4108		
.953			-.3709					
.955		-.2375						
.965	-.2756							
1.000			-.0919		-.2333		-.3894	

ALPHA (4) = 7.973 BETA (2) = .179 MACH = 1.2457 Q = 599.38 P = 551.80 RN/L = 3.0207

SECTION (1)LEFT WING BOT SURF DEPENDENT VARIABLE CP

2Y/BW	.2990	.3640	.4270	.5340	.6730	.7800	.8870	.9720
X/CW								
.010	-.2186	-.4673	.2213	.5529	.5044	.5582	.5628	
.020	.0000	-.2050	.3347	.4485	.4491	.4558	.4738	-.0434
.040		-.1415	.3262					
.050	-.0204			.3504	.3459	.3544	.3934	
.069								
.080				.2871				.0190

AMES 11-073(OA148) -140A/B/C/R ORB LEFT WING BOT (XEBL63)

ALPHA (4) = 7.973 BETA (2) = .179

SECTION (1)LEFT WING BOT SURF DEPENDENT VARIABLE CP

2Y/BW	.2990	.3540	.4270	.5340	.6730	.7800	.8870	.9720
X/CW								
.081			.2586					
.086		.0367						
.094	.0056							
.150				.2469	.2851	.3095	.2986	
.157								-.0764
.163		.2422						
.177			.2199					
.229	.0243							
.246		.1538						
.250				.2334	.2549	.2908	.2357	
.274			.2192					
.345								.0347
.390		.2005						
.400				.2403	.2934		.2165	
.402			.2192					
.503								.0041
.540				.2119	.2015			
.555			-.5623					
.590							.0646	
.637		.1941						
.650						.1033		
.670								-.3238
.700					.0328			
.725				.0403				
.750						-.2478	-.2127	
.760			.0305					
.775				-.1930	-.2321			
.798		.0174						
.808			-.1907					
.834	.0122							
.839		-.2143						
.850				-.2942	-.3380	-.3228		
.857			-.2657					
.862								-.4082
.885	-.2291							
.879		-.2598						
.900	-.0934			-.3546			-.4073	
.905			-.3435					
.919		-.2190						
.950				-.4338	-.3693	-.4277		
.953			-.3288					
.955		-.2364						
.965	-.2548							
1.000			-.1095		-.1771		-.3836	

AMES 11-073(OA148) -140A/B/C/R ORB LEFT WING BOT (XEBL63)

ALPHA (4) = 7.997 BETA (3) = 4.244 MACH = 1.2457 Q = 599.38 P = 551.80 RN/L = 3.0207

SECTION (1)LEFT WING BOT SURF DEPENDENT VARIABLE CP

2Y/BW	.2990	.3640	.4270	.5340	.6730	.7800	.8870	.9720
X/CW								
.010	-.3957	-.5258	.0647	.5101	.4827	.5257	.5326	
.020	.0000	-.3044	.2007	.4337	.4393	.4547	.4678	-.1979
.040		-.2411	.2622					
.050	-.1076			.3456	.3463	.3585	.3952	
.069								-.0905
.080				.2888				
.091			.2107					
.095		-.0347						
.094	-.0592							
.150				.2523	.2911	.3208	.3012	
.157								-.1109
.163		.1805						
.177			.2067					
.229	-.0174							
.246		.1293						
.250				.2347	.2757	.3001	.2323	
.274			.2249					
.345								-.0124
.390		.2021						
.400				.2525	.2835		.2028	
.402			.2325					
.503								-.0418
.550				.2045	.1980			
.555			-.4788					
.600							.0450	
.637		.1886						
.650						.0909		
.670								-.3638
.700					.0336			
.775				.0359				
.750						-.2571	-.2347	
.760			.0272					
.775				-.1818	-.2370			
.798		.0056						
.809			-.1971					
.834	.0049							
.839		-.2051						
.850				-.2862	-.3189	-.3169		
.857			-.2450					
.862								-.4593
.865	-.2276							
.879		-.2324						
.900	-.1057			-.3604			-.4175	
.905			-.3340					
.919		-.2139						

DATE 10 FEB 78 TABULATED PRESSURE DATA - OA148 (AMES 11-073-1) (XEBL63)

AMES 11-073(OA148) -140A/B/C/R ORB LEFT WING BOT

ALPHA (4) = 7.897 BETA (3) = 4.244

SECTION (1)LEFT WING BOT SURF DEPENDENT VARIABLE CP

2Y/BW	.2990	.3640	.4270	.5340	.6730	.7800	.8870	.9720
X/CW								
.950				-.4251	-.3296	-.4371		
.953			-.2975					
.955		-.2414						
.965	-.2457							
1.000			-.1354		-.1933		-.3878	

ALPHA (5) = 11.959 BETA (1) = -3.850 MACH = 1.2456 Q = 599.56 P = 552.04 RN/L = 3.0223

SECTION (1)LEFT WING BOT SURF DEPENDENT VARIABLE CP

2Y/BW	.2990	.3640	.4270	.5340	.6730	.7800	.8870	.9720
X/CW								
.010	-.1745	-.4073	.2988	.6982	.6976	.7482	.7347	
.020	.0000	-.1072	.4482	.6046	.6462	.6753	.6759	-.0376
.040		-.0399	.4669					
.050	.0732			.5024	.5448	.5774	.5906	
.060								.0756
.080				.4408				
.090			.4026					
.095		.1569						
.094	.1014							
.150				.3975	.4602	.4966	.4481	
.157								-.0418
.163		.3790						
.177			.3489					
.229	.1287							
.246		.2822						
.250				.3804	.4243	.4410	.3799	
.274			.3437					
.345								.1313
.390		.3221						
.400				.3756	.4006		.3302	
.402			.3691					
.503								.0999
.550				.3028	.3001			
.565			-.5380					
.600							.1574	
.637		.2872						
.650						.1832		
.670								-.2626
.700					.1094			
.740				.1082				
.750						-.1750	-.1531	
.760			.0883					

AMES 11-073(OA148) -140A/B/C/P ORB LEFT WING BOT (XE8L63)

ALPHA (5) = 11.959 BETA (1) = -3.850

SECTION (1)LEFT WING BOT SURF DEPENDENT VARIABLE CP

2Y/BW	.2990	.3640	.4270	.5340	.6730	.7800	.8870	.9720
X/CW								
.775				-.1416	-.1833			
.798		.0851						
.808			-.1344					
.834	.0684							
.839		-.1902						
.850				-.2567	-.3068	-.2577		
.857			-.2294					
.852								-.3545
.865	-.1926							
.879		-.2279						
.900	-.0501			-.3123			-.3478	
.905			-.3002					
.919		-.1840						
.950				-.4019	-.3531	-.3791		
.953			-.3112					
.955		-.1950						
.965	-.1848							
1.000			-.1691		-.3413		-.4973	

ALPHA (5) = 11.877 BETA (2) = .185 MACH = 1.2456 Q = 599.56 P = 552.04 RN/L = 3.0223

SECTION (1)LEFT WING BOT SURF DEPENDENT VARIABLE CP

2Y/BW	.2990	.3640	.4270	.5340	.6730	.7800	.8870	.9720
X/CW								
.010	-.3470	-.4936	.1065	.6265	.6432	.6686	.6470	
.020	.0000	-.2210	.2845	.5703	.6137	.6406	.6287	-.1964
.040		-.1491	.3776					
.050	-.0152			.4853	.5303	.5553	.5659	
.059								-.0402
.080				.4298				
.081			.3434					
.086		.0733						
.094	.0431							
.100				.3900	.4601	.4812	.4343	
.107								-.0808
.153		.3056						
.177			.3311					
.229	.0853							
.246		.2401						
.250				.3808	.4173	.4317	.3625	
.274			.3420					
.345								.0716
.330		.3283						

DATE 10 FEB 76 TABULATED PRESSURE DATA - OA148 (AMES 11-073-1) (XEBL63)

AMES 11-073(OA148) -140A/B/C/R ORB LEFT WING BOT

ALPHA (5) = 11.877 BETA (2) = .185

SECTION (1)LEFT WING BOT SURF DEPENDENT VARIABLE CP

2Y/BW	.2990	.3640	.4270	.5340	.6730	.7800	.8870	.9720
X/CW								
.400				.3694	.3902		.3057	
.402			.3655					.0497
.503				.2985	.2897			
.550			-.5893				.1305	
.600								
.637		.2852				.1663		
.650								-.3073
.670					.1179			
.700				.1072				
.715						-.1891	-.1693	
.725								
.750			.0932					
.775				-.1129	-.1923			
.790		.0758						
.800			-.1437					
.834	.0682							
.839		-.1691						
.850				-.2418	-.3130	-.2630		
.857			-.2162					-.4037
.862								
.865	-.1899							
.879		-.2102						
.900	-.0484			-.3178			-.3618	
.915			-.2984					
.919		-.1741						
.950				-.3979	-.3337	-.3992		
.953			-.2580					
.955		-.1962						
.965	-.1833							
1.000			-.2806		-.2921		-.5270	

ALPHA (5) = 11.890 BETA (3) = 4.256 MACH = 1.2456 Q = 599.56 P = 552.04 RN/L = 3.0223

SECTION (1)LEFT WING BOT SURF DEPENDENT VARIABLE CP

2Y/BW	.2990	.3640	.4270	.5340	.6730	.7800	.8870	.9720
X/CW								
.010	-.4648	-.5454	-.0898	.5248	.5653	.5656	.5455	
.020	.0000	-.3284	.1282	.5115	.5656	.5871	.5644	-.3213
[illegible]		[illegible]	.2819					
.040	-.0448			.4624	.5102	.5298	.5266	
[illegible]								-.1440
.060				.4133				

AMES 11-073(OA148) -140A/B/C/R ORB LEFT WING BOT (XEBL63)

ALPHA (5) = 11.890 BETA (3) = 4.256

SECTION (1:LEFT WING BOT SURF DEPENDENT VARIABLE CP

2Y/BW	.2990	.3640	.4270	.5340	.6730	.7800	.8870	.9720
X/CW								
.081			.2567					
.086		-.0145						
.094	-.0290							
.150				.3816	.4459	.4730	.4059	
.157								-.1231
.163		.2381						
.177			.3033					
.229	.0384							
.246		.1942						
.250				.3743	.4067	.4173	.3469	
.274			.3424					
.345								.0183
.390		.3148						
.400				.3539	.3782		.2867	
.402			.3548					
.503								-.0005
.550				.2849	.2790			
.565			-.5124					
.600							.1121	
.637		.2742						
.650						.1575		
.670								-.3340
.700					.1190			
.725				.0983				
.740						-.2019	-.1833	
.760			.0847					
.775				-.1156	-.1998			
.789		.0610						
.809			-.1497					
.844	.0655							
.849		-.1612						
.850				-.2337	-.2990	-.2711		
.857			-.1974					
[illegible]								-.4177
[illegible]	-.1934							
.879		-.1860						
.910	-.0727			-.3202			-.3586	
.925			-.2634					
.919		-.1755						
.940				-.3744	-.3156	-.4018		
[illegible]			-.2433					
.955		-.2081						
.945	-.1749							
[illegible]			-.3062		-.2626		-.5151	

AMES 11-073(OA148) -140A/B/C/R ORB LEFT WING BOT (XEBL64) (05 AUG 75)

REFERENCE DATA

SREF = 2690.0000 SQ.FT. XMRP = 1076.6800 IN. XO
LREF = 474.8000 IN. YMRP = .0000 IN. YO
BREF = 936.0680 IN. ZMRP = 375.0000 IN. ZO
SCALE = .0300

PARAMETRIC DATA

RUDDER = 5.000 SPDBRK = 55.000
BDFLAP = 16.300 L-ELVN = -4.000
R-ELVN = -4.000 MACH = 1.100

ALPHA (1) = -3.951 BETA (1) = -3.840 MACH = 1.0981 Q = 598.93 P = 709.54 RN/L = 3.1905

SECTION (1)LEFT WING BOT SURF DEPENDENT VARIABLE CP

2Y/BW	.2990	.3640	.4270	.5340	.6730	.7800	.8870	.9720
X/CW								
.010	-.1696	-.3313	-.2809	-.6186	-.7416	-.5562	-.5484	
.020	.0000	-.3055	-.3444	-.7767	-.7773	-.8080	-.8046	-.8417
.040		-.2917	-.3991					
.050	-.1798			-.7206	-.7992	-.8391	-.8309	
.069								-.9308
.080				-.7024				
.081			-.2873					
.086		-.1409						
.094	-.1843							
.150				-.4624	-.7001	-.7339	-.7676	
.157								-.5170
.163		-.0628						
.177			-.2418					
.229	-.1506							
.245		-.1282						
.250				-.2728	-.5008	-.6695	-.6987	
.274			-.1947					
.345								-.8445
.372		-.1476						
.400				-.1535	-.1420		-.6175	
.402			-.1232					
.503								-.8152
.550				-.1223	-.1434			
.565			-.4555					
.600							-.2280	
.637		-.1092						
.650						-.1594		
.670								-.7274
.700					-.2138			
.725				-.2397				
.750						-.3812	-.4584	
.760			-.1499					
.775				-.4994	-.3516			
.799		-.1639						
.809			-.5121					
.834	-.2274							
.839		-.4865						
.850				-.5569	-.4105	-.5579		

AMES 11-073(OA148) -140A/B/C/R ORB LEFT WING BOT (XE8L64)

ALPHA (1) = -3.951 BETA (1) = -3.840

SECTION (1)LEFT WING BOT SURF DEPENDENT VARIABLE CP

2Y/BW	.2990	.3640	.4270	.5340	.6730	.7800	.8870	.9720
X/CW								
.857			-.5659					
.862								-.7444
.865	-.4922							
.879		-.4844						
.900	-.3557			-.5583			-.5092	
.905			-.4221					
.919		-.4636						
.950				-.2965	-.6733	-.2116		
.953			-.2790					
.955		-.2460						
.965	-.3604							
1.000			-.1577		-.2114		-.1019	

ALPHA (1) = -3.948 BETA (2) = .196 MACH = 1.0981 Q = 598.93 P = 709.54 RN/L = 3.1905

SECTION (1)LEFT WING BOT SURF DEPENDENT VARIABLE CP

2Y/BW	.2990	.3640	.4270	.5340	.6730	.7800	.8870	.9720
X/CW								
.010	-.1262	-.1571	-.1041	-.6087	-.7622	-.6011	-.6060	
.020	.0000	-.1599	-.1419	-.7639	-.8120	-.8345	-.8544	-.8989
.040		-.1435	-.2451					
.050	-.1290			-.6776	-.8144	-.8634	-.8803	
.069								-.9024
.080				-.6374				
.081			-.1801					
.086		-.0477						
.094	-.1347							
.150				-.2883	-.6778	-.7552	-.7885	
.157								-.5211
.163		.0415						
.177			-.1817					
.229	-.1051							
.246		-.0683						
.250				-.1829	-.2151	-.5939	-.7274	
.274			-.1355					
.345								-.8501
.390		-.0804						
.430				-.1175	-.1195		-.3920	
.482			-.0970					
.503								-.7256
.550				-.1201	-.1437			
.565			-.5550					
.602							-.1456	

AMES 11-073(OA148) -140A/B/C/R ORB LEFT WING BOT (XE8L64)

ALPHA (1) = -3.948 BETA (2) = .196

SECTION (1)LEFT WING BOT SURF DEPENDENT VARIABLE CP

2Y/BW	.2990	.3640	.4270	.5340	.6730	.7800	.8870	.9720
X/CW								
.637		-.1013						
.650						-.1726		
.670								-.5360
.700					-.2367			
.725				-.2413				
.750						-.4171	-.4537	
.760			-.2216					
.775				-.5061	-.4494			
.798		-.2032						
.809			-.5047					
.834	-.2282							
.839		-.4845						
.850				-.5709	-.3951	-.5590		
.857			-.5431					
.862								-.6390
.865	-.4783							
.879		-.4847						
.900	-.3438			-.6087			-.5712	
.905			-.5324					
.919		-.4769						
.950				-.3673	-.6821	-.2984		
.953			-.3319					
.955		-.3619						
.965	-.5668							
1.000			-.2126		-.2764		-.2075	

ALPHA (1) = -3.942 BETA (3) = 4.273 MACH = 1.0981 Q = 598.93 P = 709.54 RN/L = 3.1905

SECTION (1)LEFT WING BOT SURF DEPENDENT VARIABLE CP

2Y/BW	.2990	.3640	.4270	.5340	.6730	.7800	.8870	.9720
X/CW								
.010	-.1206	-.0580	.0541	-.5780	-.7766	-.6356	-.6552	
.020	.0000	-.0561	.0221	-.7028	-.8091	-.8590	-.8741	-.8001
.040		-.0336	-.0976					
.050	-.1008			-.5697	-.7439	-.8318	-.8357	
.069								-.6553
.080				-.2894				
.081			-.0772					
.086		.0504						
.094	-.1035							
.150				-.2188	-.3115	-.6024	-.7839	
.157								-.3951
.163		.1195						

AMES 11-073(OA148) -140A/B/C/R ORB LEFT WING BOT (XEBL64)

ALPHA (1) = -3.942 BETA (3) = 4.273

SECTION (1)LEFT WING BOT SURF DEPENDENT VARIABLE CP

2Y/BW	.2990	.3640	.4270	.5340	.6730	.7800	.8870	.9720
X/CW								
.177			-.1004					
.229	-.0669							
.246		.0044						
.250				-.1333	-.1931	-.2685	-.4664	
.274			-.0696					
.345								-.5716
.390		-.0340						
.400				-.1062	-.1158		-.2435	
.402			-.0810					
.503								-.4802
.550				-.1272	-.1534			
.565			-.4105					
.600							-.2036	
.637		-.1123						
.650						-.1865		
.670								-.4144
.700					-.2438			
.725				-.2565				
.750						-.4535	-.4678	
.760			-.2517					
.775				-.5083	-.5120			
.798		-.2292						
.808			-.5150					
.834	-.2505							
.839		-.4964						
.850				-.5819	-.4119	-.5888		
.857			-.5411					
.862								-.5037
.865	-.5041							
.873		-.4783						
.900	-.3768			-.6392			-.6034	
.905			-.6099					
.919		-.4980						
.950				-.4117	-.5476	-.3815		
.953			-.3872					
.955		-.5099						
.965	-.6095							
1.000			-.2376		-.3215		-.2131	

AMES 11-073(OA148) -140A/B/C/R ORB LEFT WING BOT (XE8L64)

ALPHA (2) = .059 BETA (1) = -3.863 MACH = 1.0998 Q = 599.80 P = 708.37 RN/L = 3.1909

SECTION (1)LEFT WING BOT SURF DEPENDENT VARIABLE CP

2Y/BW	.2990	.3640	.4270	.5340	.6730	.7800	.8870	.9720
X/CW								
.010	-.0477	-.0106	.2104	-.3358	-.4718	-.4019	-.3149	
.020	.0000	-.0393	.1298	-.4895	-.5570	-.5651	-.5974	-.4025
.040		-.0287	-.0650					
.050	-.0877			-.3131	-.4651	-.5623	-.6029	
.069								-.4265
.080				-.2616				
.081			-.0617					
.086		.0235						
.094	-.1063							
.150				-.1786	-.2154	-.3671	-.4667	
.157								-.2164
.163		.0877						
.177			-.0852					
.229	-.0788							
.246		-.0239						
.250				-.0620	-.0939	-.0946	-.0824	
.274			-.0451					
.345								-.0836
.390		-.0135						
.400				.0014	.0156		-.0050	
.402			.0069					
.503								-.1453
.550				-.0069	-.0397			
.565			-.5066					
.600							-.1128	
.637		-.0035						
.650						-.0879		
.670								-.4233
.700					-.1311			
.745				-.1444				
.750						-.3845	-.4702	
.760			-.1134					
.775				-.4110	-.2759			
.798		-.0977						
.808			-.4371					
.834	-.1576							
.839		-.4269						
.850				-.5104	-.3835	-.5324		
.857			-.5009					
.862								-.3882
.865	-.4491							
.879		-.4473						
.900	-.2676			-.5195			-.3078	
.905			-.4525					
.919		-.4236						

AMES 11-073(OA148) -140A/B/C/R ORB LEFT WING BOT (XE8L64)

ALPHA (2) = .059 BETA (1) = -3.863

SECTION (1)LEFT WING BOT SURF DEPENDENT VARIABLE CP

2Y/BW	.2990	.3640	.4270	.5340	.6730	.7800	.8870	.9720
X/CW								
.950				-.2604	-.6593	-.1634		
.953			-.2461					
.955		-.2311						
.965	-.4318							
1.000			-.1037		-.1876		-.1344	

ALPHA (2) = .062 BETA (2) = .183 MACH = 1.0998 Q = 599.80 P = 708.37 RN/L = 3.1909

SECTION (1)LEFT WING BOT SURF DEPENDENT VARIABLE CP

2Y/BW	.2990	.3640	.4270	.5340	.6730	.7800	.8870	.9720
X/CW								
.010	-.1017	-.0127	.2892	-.2718	-.4506	-.4206	-.3331	
.020	.0000	-.0170	.2237	-.2491	-.4133	-.5392	-.5877	-.2205
.040		.0041	.0619					
.050	-.1072			-.2368	-.3638	-.4354	-.4770	
.069								-.2113
.080				-.1560				
.091			.0071					
.085		.0636						
.094	-.1077							
.150				-.1016	-.0794	-.0590	-.1260	
.157								-.1440
.163		.1630						
.177			-.0318					
.229	-.0678							
.246		.0224						
.250				-.0320	-.0428	-.0647	-.1101	
.274			.0010					
.345								-.0959
.390		.0224						
.400				-.0030	.0458		-.0181	
.402			.0078					
.503								-.1640
.550				-.0039	-.0338			
.565			-.6024					
.600							-.1405	
.637		-.0132						
.650						-.1091		
.670								-.4430
.700					-.1521			
.725				-.1383				
.750						-.3642	-.4918	
.760			-.1371					

AMES 11-073(OA148) -140A/B/C/R ORB LEFT WING BOT (XEBL64)

ALPHA (2) = .062 BETA (2) = .183

SECTION (1)LEFT WING BOT SURF DEPENDENT VARIABLE CP

2Y/BW	.2990	.3640	.4270	.5340	.6730	.7800	.8870	.9720
X/CW								
.775				-.4201	-.3479			
.798		-.1260						
.808			-.4406					
.834	-.1561							
.839		-.4251						
.850				-.5129	-.3659	-.5499		
.857			-.4781					
.862								-.3707
.865	-.4323							
.879		-.4137						
.900	-.2845			-.5536			-.5852	
.905			-.5288					
.919		-.4187						
.950				-.3138	-.6427	-.2616		
.953			-.2864					
.955		-.3841						
.965	-.5073							
1.000			-.1618		-.2362		-.1683	

ALPHA (2) = .059 BETA (3) = 4.253 MACH = 1.0998 Q = 599.80 P = 708.37 RN/L = 3.1909

SECTION (1)LEFT WING BOT SURF DEPENDENT VARIABLE CP

2Y/BW	.2990	.3640	.4270	.5340	.6730	.7800	.8870	.9720
X/CW								
.010	-.2031	-.0409	.3629	-.0682	-.2980	-.3508	-.2846	
.020	.0000	-.0161	.3074	-.0930	-.2437	-.3477	-.4223	-.1602
.040		.0081	.1756					
.050	-.1474			-.0833	-.2297	-.2510	-.3345	
.069								-.1654
.080				-.0619				
.081			.0885					
.086		.0934						
.094	-.1182							
.150				-.0199	-.0397	-.0765	-.1120	
.157								-.1573
.163		.2214						
.177			.0455					
.229	-.0538							
.246		.0911						
.250				.0061	-.0326	-.0559	-.1011	
.274			.0491					
.345								-.1373
.390		.0664						

AMES 11-073(OA148) -140A/B/C/R ORB LEFT WING BOT (XE8L64)

ALPHA (2) = .059 BETA (3) = 4.253

SECTION (1)LEFT WING BOT SURF DEPENDENT VARIABLE CP

2Y/BW	.2990	.3640	.4270	.5340	.6730	.7800	.8870	.9720
X/CW								
.400				.0230	.0281		-.0482	
.402			.0342					
.503								-.1867
.550				-.0242	-.0487			
.565			-.5020					
.600							-.1661	
.637		-.0180						
.650						-.1348		
.670								-.4701
.700					-.1853			
.725				-.1751				
.750						-.3904	-.5064	
.760			-.1694					
.775				-.4581	-.4265			
.798		-.1566						
.809			-.4332					
.834	-.1758							
.839		-.4136						
.850				-.5286	-.3480	-.5563		
.857			-.4578					
.862								-.3550
.865	-.4296							
.879		-.4134						
.900	-.2877			-.5867			-.6370	
.905			-.5411					
.919		-.4184						
.950				-.3378	-.5973	-.3624		
.953			-.4012					
.955		-.4731						
.965	-.5486							
1.000			-.1625		-.2702		-.2033	

ALPHA (3) = 4.021 BETA (1) = -3.865 MACH = 1.0995 Q = 600.25 P = 709.31 RN/L = 3.1949

SECTION (1)LEFT WING BOT SURF DEPENDENT VARIABLE CP

2Y/BW	.2990	.3640	.4270	.5340	.6730	.7800	.8870	.9720
X/CW								
.010	-.0344	-.0646	.4614	.2001	.0987	.2089	.2471	
.020	.0000	-.0063	.4061	.0708	.0932	.1076	.1081	.0738
.040		.0242	.2472					
.050	-.0211			.0508	.0419	.0706	.0951	
.069								.0410
.080				.0501				

AMES 11-073(OA148) -140A/B/C/R ORB LEFT WING BOT (XEBL64)

ALPHA (3) = 4.021 BETA (1) = -3.865

SECTION (1)LEFT WING BOT SURF DEPENDENT VARIABLE CP

2Y/BW	.2990	.3640	.4270	.5340	.6730	.7800	.8870	.9720
X/CW								
.081			.1339					
.085		.1202						
.094	-.0453							
.150				.1001	.1307	.1418	.1036	
.157								-.0757
.163		.2331						
.177			.0938					
.229	-.0418							
.246		.0813						
.250				.1500	.1355	.1299	.0721	
.274			.1483					
.345								-.0187
.390		.1500						
.400				.1630	.1694		.0911	
.402			.1784					
.503								-.0753
.550				.0935	.0612			
.565			-.5772					
.600							-.0595	
.637		.1000						
.650						-.0323		
.670								-.4313
.700					-.0951			
.725				-.0825				
.750						-.3747	-.3831	
.760			-.0685					
.775				-.3731	-.3326			
.798		-.0523						
.808			-.3801					
.834	-.1074							
.839		-.3879						
.850				-.4844	-.3309	-.5085		
.857			-.4591					
.862								-.4880
.855	-.4029							
.879		-.3952						
.900	-.2115			-.5276			-.5635	
.905			-.5115					
.919		-.3824						
.950				-.2335	-.5216	-.5433		
.953			-.2312					
.955		-.3094						
.955	-.4292							
1.000			-.0815		-.1952		-.2071	

AMES 11-073(OA148) -140A/B/C/R ORB LEFT WING BOT (XE8L64)

ALPHA (3) = 4.021 BETA (2) = .178 MACH = 1.0995 Q = 600.25 P = 709.31 RN/L = 3.1949

SECTION (1)LEFT WING BOT SURF DEPENDENT VARIABLE CP

2Y/BW	.2990	.3640	.4270	.5340	.6730	.7800	.8870	.9720
X/CW								
.010	-.1679	-.2034	.4360	.2784	.1897	.2705	.3002	
.020	.0000	-.0851	.4203	.1558	.1718	.1758	.1806	.0047
.040		-.0460	.2911					
.050	-.0834			.1261	.1064	.1273	.1531	
.069								.0007
.080				.1160				
.081			.1859					
.106		.1042						
.094	-.0843							
.151				.1412	.1600	.1656	.1166	
.157								-.0924
.163		.2693						
.177			.1457					
.229	-.0573							
.245		.1420						
.250				.1659	.1484	.1510	.0763	
.274			.1606					
.345								-.0587
.390		.1704						
.400				.1654	.1721		.0791	
.402			.1937					
.503								-.1085
.550				.0975	.0692			
.565			-.6500					
.600							-.0756	
.637		.1016						
.650						-.0371		
.670								-.4593
.700					-.0915			
.725				-.0798				
.750						-.4027	-.3920	
.760			-.0765					
.775				-.3804	-.3271			
.798		-.0696						
.809			-.3689					
.834	-.1023							
.839		-.3751						
.850				-.4727	-.3190	-.5024		
.857			-.4272					
.862								-.5289
.865	-.3956							
.879		-.3665						
.900	-.2062			-.5218			-.5851	
.905			-.5084					
.919		-.3599						

AMES 11-073(OA148) -140A/B/C/R ORB LEFT WING BOT (XE8L64)

ALPHA (3) = 4.021 BETA (2) = .178

SECTION (1)LEFT WING BOT SURF DEPENDENT VARIABLE CP

2Y/BW	.2990	.3640	.4270	.5340	.6730	.7800	.8870	.9720
X/CW								
.950				-.2262	-.5657	-.5169		
.953			-.2683					
.955		-.4137						
.965	-.4716							
1.000			-.0997		-.1756		-.2287	

ALPHA (3) = 4.024 BETA (3) = 4.243 MACH = 1.0995 Q = 600.25 P = 709.31 RN/L = 3.1949

SECTION (1)LEFT WING BOT SURF DEPENDENT VARIABLE CP

2Y/BW	.2990	.3640	.4270	.5340	.6730	.7800	.8870	.9720
X/CW								
.010	-.3598	-.3312	.3930	.3805	.2746	.3206	.3250	
.020	.0000	-.1769	.4110	.2754	.2400	.2324	.2305	-.1382
.040		-.1286	.3397					
.050	-.1720			.2208	.1701	.1619	.1760	
.069								-.1014
.080				.1920				
.091			.2549					
.086		.0747						
.094	-.1399							
.150				.1769	.1730	.1724	.1166	
.157								-.1382
.163		.2804						
.177			.2056					
.229	-.0786							
.246		.1973						
.250				.1691	.1512	.1522	.0642	
.274			.1898					
.345								-.1261
.390		.1940						
.400				.1582	.1609		.0552	
.402			.1824					
.503								-.1607
.550				.0867	.0568			
.565			-.5771					
.600							-.0998	
.637		.0880						
.650						-.0580		
.670								-.5085
.700					-.0988			
.725				-.0890				
.750						-.4330	-.4176	
.760			-.0987					

AMES 11-073(OA148) -140A/B/C/R ORB LEFT WING BOT (XE8L64)

ALPHA (3) = 4.024 BETA (3) = 4.243

SECTION (1)LEFT WING BOT SURF DEPENDENT VARIABLE CP

2Y/BW	.2990	.3640	.4270	.5340	.6730	.7800	.8870	.9720
X/CW								
.775				-.3948	-.3639			
.798		-.1093						
.808			-.3784					
.834	-.1127							
.839		-.3689						
.850				-.4778	-.3094	-.5127		
.857			-.4095					
.862								-.5841
.865	-.3894							
.879		-.3570						
.900	-.2318			-.5527			-.6157	
.905			-.4926					
.919		-.3703						
.950				-.3998	-.5657	-.5340		
.953			-.4485					
.955		-.4221						
.965	-.4968							
1.000			-.1300		-.2256		-.2533	

ALPHA (4) = 7.977 BETA (1) = -3.859 MACH = 1.0995 Q = 600.25 P = 709.31 RN/L = 3.1954

SECTION (1)LEFT WING BOT SURF DEPENDENT VARIABLE CP

2Y/BW	.2990	.3640	.4270	.5340	.6730	.7800	.8870	.9720
X/CW								
.010	-.1259	-.3828	.4646	.6109	.5706	.6315	.6117	
.020	.0000	-.1530	.5322	.4915	.5137	.5215	.5111	-.0237
.040		-.0936	.4689					
.060	.0085			.4037	.4081	.4169	.4095	
.069								.0375
.080				.3546				
.081			.3602					
.086		.0981						
.094	.0123							
.150				.3227	.3449	.3547	.2885	
.157								-.0681
.163		.3622						
.177			.3054					
.229	.0106							
.246		.2724						
.250				.3020	.3010	.2930	.2261	
.274			.2999					
.345								
.330		.2895					.0186	

AMES 11-073(OA148) -140A/B/C/R ORB LEFT WING BOT (XEBL64)

ALPHA (4) = 7.977 BETA (1) = -3.859

SECTION (1)LEFT WING BOT SURF DEPENDENT VARIABLE CP

2Y/BW	.2990	.3640	.4270	.5340	.6730	.7800	.8870	.9720
X/CW								
.400				.2678	.2732		.1834	
.402			.2902					
.503								-.0210
.550				.1777	.1600			
.565			-.6391					
.600							.0078	
.637		.1746						
.660						.0315		
.670								-.3873
.700					-.0441			
.725				-.0263				
.750						-.3491	-.3303	
.760			-.0429					
.775				-.3273	-.3508			
.798		-.0450						
.808			-.3188					
.844	-.3572							
.849		-.3494						
.850				-.4422	-.4443	-.4501		
.857			-.3998					
.862								-.4018
.865	-.3698							
.879		-.3494						
.900	-.1421			-.5111			-.5263	
.905			-.4816					
.919		-.3084						
.950				-.2233	-.4625	-.5690		
.953			-.2837					
.955		-.3655						
.965	-.4013							
1.000			-.1015		-.1635		-.3638	

ALPHA (4 = 7.981 BETA (2) = .181 MACH = 1.0995 Q = 600.25 P = 709.31 RN/L = 3.1954

SECTION (1)LEFT WING BOT SURF DEPENDENT VARIABLE CP

2Y/BW	.2990	.3640	.4270	.5340	.6730	.7800	.8870	.9720
X/CW								
.010	-.3323	-.6405	.3190	.6105	.5686	.6083	.5796	
.020	.0000	-.3127	.4529	.5244	.5140	.5263	.4991	-.1637
.040		-.2343	.4655					
.050	-.0887			.4316	.4281	.4267	.4139	
.069								-.0733
.080				.3808				

AMES 11-073(OA148) -140A/B/C/R ORB LEFT WING BOT (XEBL64)

ALPHA (4) = 7.981 BETA (2) = .181

SECTION (1)LEFT WING BOT SURF DEPENDENT VARIABLE CP

2Y/BW	.2990	.3640	.4270	.5340	.6730	.7200	.8870	.9720
X/CW								
.081			.3839					
.086		.0144						
.094	-.0557							
.150				.3369	.3575	.3549	.2840	
.157								-.0970
.163		.3527						
.177			.3313					
.229	-.0265							
.246		.2816						
.250				.3126	.3113	.2980	.2207	
.274			.3083					
.345								-.0339
.390		.2994						
.400				.2675	.2705		.1666	
.402			.2893					
.503								-.0633
.550				.1807	.1586			
.565			-.7132					
.600							-.0098	
.637		.1731						
.650						.0189		
.670								-.4300
.700					-.0231			
.725				-.0168				
.740						-.3616	-.3436	
.760			-.0342					
.775				-.3234	-.3488			
.798		-.0398						
.808			-.3234					
.834	-.0571							
.839		-.3347						
.850				-.4318	-.3986	-.4451		
.857			-.3711					
.862								-.4483
.865	-.3574							
.879		-.3217						
.900	-.1383			-.5163			-.5421	
.905			-.4474					
.919		-.2980						
.950				-.1936	-.4119	-.5587		
.953			-.3524					
.955		-.3569						
.965	-.4356							
1.000			-.0852		-.1708		-.4093	

AMES 11-073(OA148) -140A/B/C/R ORB LEFT WING BOT (XEBL64)

ALPHA (4) = 7.900 BETA (3) = 4.237 MACH = 1.0995 Q = 600.25 P = 709.31 RN/L = 3.1954

SECTION (1)LEFT WING BOT SURF DEPENDENT VARIABLE CP

2Y/BW	.2990	.3640	.4270	.5340	.6730	.7800	.8870	.9720
X/CW								
.010	-.5499	-.4394	.1850	.5834	.5378	.5486	.5113	
.020	.0000	-.3451	.3316	5191	.5033	.4950	.4622	-.3414
.040		-.2790	.4106					
.050	-.1931			.4410	.4188	4116	.3865	
.069								-.2042
.080				.3854				
.081			.3819					
.086		-.0298						
.094	-.1300							
.150				.3359	.3399	.3373	.2597	
.157								-.1511
.163		.3250						
.177			.3466					
.229	-.0670							
.246		.2883						
.250				.3042	.2986	.2801	.1954	
.274			.3108					
.345								-.1036
.347		.3053						
.400				.2548	.2515		.1385	
.402			.2804					
.503								-.1249
.550				.1613	.1380			
.565			-.6337					
.600							-.0476	
.637		.1646						
.650						-.0020		
.670								-.4987
.700					-.0309			
.725				-.0312				
.750						-.3790	-.3677	
.760			-.0531					
.775				-.3360	-.3712			
.798		-.0588						
.803			-.3359					
.834	-.0635							
.830		-.3315						
.850				-.4360	-.3047	-.4661		
.857			-.3510					
.852								-.5362
.865	-.3572							
.879		-.3139						
.900	-.1921			-.5271			-.5628	
.905			-.4395					
.910		-.3199						

AMES 11-073(OA148) -140A/B/C/R ORB LEFT WING BOT (XEBL64)

ALPHA (4) = 7.900 BETA (3) = 4.237

SECTION (1)LEFT WING BOT SURF DEPENDENT VARIABLE CP

2Y/BW	.2990	.3640	.4270	.5340	.6730	.7800	.8870	.9720
X/CW								
.950				-.4294	-.4572	-.5205		
.953			-.4123					
.955		-.3713						
.965	-.4441							
1.000			-.1006		-.2332		-.4617	

ALPHA (5) = 11.919 BETA (1) = -3.844 MACH = 1.0980 Q = 599.84 P = 710.72 RN/L = 3.1951

SECTION (1)LEFT WING BOT SURF DEPENDENT VARIABLE CP

2Y/BW	.2990	.3640	.4270	.5340	.6730	.7800	.8870	.9720
X/CW								
.010	-.2818	-.5746	.2417	.7422	.7373	.7316	.6826	
.020	.0000	-.2088	.4626	.6930	.7040	.7023	.6580	-.1927
.040		-.1267	.5526					
.050	.0131			.5973	.6101	.6125	.5836	
.069								-.0407
.080				.5290				
.081			.5090					
.086		.1903						
.094	.0586							
.150				.4734	.4991	.4990	.4254	
.157								-.0900
.163		.4600						
.177			.4449					
.229	.0820							
.246		.3966						
.250				.4287	.4351	.4184	.3486	
.274			.4160					
.345								.0629
.390		.4032						
.400				.3615	.3652		.2656	
.402			.3819					
.503								.0233
.550				.2552	.2343			
.565			-.6836					
.600							.0795	
.637		.2492						
.650						.1113		
.670								-.3811
.700					.0575			
.725				.0359				
.750						-.2796	-.2794	
.760			.0026					

AMES 11-073(OA148) -140A/B/C/R ORP LEFT WING BOT (XEBL64)

ALPHA (5) = 11.919 BETA (1) = -3.844

SECTION (1)LEFT WING BOT SURF DEPENDENT VARIABLE CP

2Y/BW	.2990	.3640	.4270	.5340	.6730	.7800	.8870	.9720
X/CW								
.775				-.2297	-.3247			
.798		-.0010						
.808			-.2659					
.834	-.0105							
.839		-.3151						
.850				-.3990	-.4328	-.3964		
.857			-.3242					
.865	-.3241							-.4278
.879		-.3213						
.900	-.1260			-.4657			-.4722	
.905			-.4309					
.919		-.2460						
.950				-.5710	-.4627	-.5395		
.953			-.3819					
.955		-.3050						
.965	-.2231							
1.000			-.1194		-.3095		-.5039	

ALPHA (5) = 11.930 BETA (2) = .189 MACH = 1.0980 Q = 599.84 P = 710.72 RN/L = 3.1951

SECTION (1)LEFT WING BOT SURF DEPENDENT VARIABLE CP

2Y/BW	.2990	.3640	.4270	.5340	.6730	.7800	.8870	.9720
X/CW								
.010	-.4925	-.6509	-.0020	.6722	.6752	.6356	.5914	
.020	.0000	-.3362	.2837	.6663	.6600	.6542	.5971	-.3430
.040		-.2496	.4735					
.050	-.0920			.5957	.5962	.5862	.5447	
.069								-.1538
.080				.5387				
.081			.4842					
.086		.0701						
.094	-.0220							
.150				.4758	.4944	.4891	.4032	
.157								-.1126
.163		.3947						
.177			.4551					
.229	.0374							
.246		.3641						
.250				.4239	.4289	.4097	.3250	
.274			.4157					
.345								.0018
.390		.3992						

AMES 11-073(OA148) -140A/B/C/R ORB LEFT WING BOT (XEBL64)

ALPHA (5) = 11.930 BETA (2) = .189

SECTION (1)LEFT WING BOT SURF DEPENDENT VARIABLE CP

2Y/BW	.2990	.3640	.4270	.5340	.6730	.7800	.8870	.9720
X/CW								
.400				.3580	.3592		.2439	
.402			.3750					
.503								-.0209
.550				.2544	.2295			
.565			-.7188					
.600							.0595	
.637		.2507						
.650						.1037		
.670								-.4300
.700					.0562			
.725				.0344				
.750						-.2962	-.2915	
.760			.0079					
.775				-.2345	-.3373			
.798		-.0070						
.808			-.2823					
.834	-.0052							
.839		-.2948						
.850				-.3854	-.4175	-.4068		
.857			-.3122					
.862								-.4816
.865	-.3190							
.879		-.2889						
.900	-.1013			-.4792			-.4942	
.905			-.3656					
.919		-.2415						
.950				-.5418	-.4561	-.5393		
.953			-.3527					
.955		-.3095						
.965	-.3689							
1.000			-.1667		-.2354		-.5653	

ALPHA (5) = 11.925 BETA (3) = 4.249 MACH = 1.0980 Q = 599.84 P = 710.72 RN/L = 3.1951

SECTION (1)LEFT WING BOT SURF DEPENDENT VARIABLE CP

2Y/BW	.2990	.3640	.4270	.5340	.6730	.7800	.8870	.9720
X/CW								
.010	-.6482	-.6753	-.1350	.5746	.5807	.5149	.4725	
.020	.0000	-.4611	.1558	.6052	.5955	.5781	.5138	-.4747
.040		-.3689	.4130					
.050	-.1928			.5622	.5573	.5340	.4862	
.065								-.2706
.080				.5132				

AMES 11-073(OA148) -140A/B/C/R ORB LEFT WING BOT (XE8L64)

ALPHA (5) = 11.925 BETA (3) = 4.249

SECTION (1)LEFT WING BOT SURF DEPENDENT VARIABLE CP

2Y/BW	.2990	.3640	.4270	.5340	.6730	.7800	.8870	.9720
X/CW								
.081			.4607					
.086		-.0212						
.094	-.0987							
.150				.4512	.4630	.4559	.3593	
.157								-.1762
.163		.3526						
.177			.4427					
.229	-.0111							
.246		.3517						
.250				.4001	.4019	.3829	.2921	
.274			.4028					
.345								-.0788
.390		.3844						
.400				.3350	.3365		.2106	
.402			.3576					
.503								-.0887
.550				.2365	.2103			
.565			-.6929					
.600							.0283	
.637		.2321						
.650						.0860		
.670								-.4737
.700					.0455			
.725				.0201				
.750						-.3275	-.2964	
.760			-.0098					
.775				-.2558	-.3526			
.798		-.0198						
.808			-.2967					
.834	-.0195							
.839		-.2966						
.850				-.3827	-.4116	-.4291		
.857			-.3195					
.862								-.5499
.865	-.3217							
.879		-.2736						
.900	-.1445			-.4808			-.5168	
.905			-.3782					
.919		-.2726						
.950				-.5121	-.4483	-.5437		
.953			-.3568					
.955		-.3160						
.965	-.3580							
1.000			-.2663		-.2285		-.5208	

AMES 11-073(OA148) -140A/B/C/R ORB LEFT WING BOT (XE8L65) (05 AUG 75)

REFERENCE DATA

SREF = 2690.0000 SQ.FT. XMRP = 1076.6800 IN. XO
LREF = 474.8000 IN. YMRP = .0000 IN. YO
BREF = 936.0690 IN. ZMRP = 375.0000 IN. ZO
SCALE = .0300

PARAMETRIC DATA

RUDDER = 5.000 SPDBRK = 55.000
BDFLAP = 16.300 L-ELVN = -4.000
R-ELVN = -4.000 MACH = .900

ALPHA (1) = -3.965 BETA (1) = -3.837 MACH = .90037 Q = 600.12 P = 1057.6 RN/L = 3.5768

SECTION (1)LEFT WING BOT SURF DEPENDENT VARIABLE CP

2Y/BW	.2990	.3640	.4270	.5340	.6730	.7800	.8870	.9720
X/CW								
.010	-.1306	-.2878	-.4892	-1.0812	-1.2516	-1.0216	-1.0373	
.020	.0000	-.2533	-.5333	-1.2574	-1.3110	-1.3264	-1.3430	-1.3303
.040		-.2264	-.6613					
.050	-.1255			-1.1563	-1.3105	-1.3623	-1.3721	
.069								-1.2315
.080				-1.0636				
.081			-.4772					
.086		-.1111						
.094	-.1154							
.150				-.6313	-1.1419	-1.2169	-1.2414	
.157								-.6143
.163		-.1697						
.177			-.4689					
.229	-.0504							
.246		-.3119						
.250				-.3998	-.4757	-.9697	-1.1783	
.274			-.3640					
.345								-.6580
.390		-.3357						
.400				-.2664	-.2719		-.4024	
.402			-.2487					
.503								-.5717
.550				-.3079	-.2698			
.565			-.7709					
.600							-.2001	
.637		-.2927						
.650						-.2300		
.670								-.5750
.700					-.2329			
.725				-.2629				
.750						-.5432	-.6420	
.760			-.2116					
.775				-.6912	-.6135			
.798		-.2771						
.803			-.7338					
.834	-.3237							
.839		-.6666						
.850				-.4026	-.5379	-.3976		

AMES 11-073(OA148) -140A/B/C/R ORB LEFT WING BOT (XEBL65)

ALPHA (1) = -3.965 BETA (1) = -3.837

SECTION (1)LEFT WING BOT SURF DEPENDENT VARIABLE CP

X/CW \ 2Y/BW	.2990	.3640	.4270	.5340	.6730	.7800	.8870	.9720
.857			-.4038					
.862								
.865	-.6435							-.6546
.879		-.3588						
.900	-.3683			-.3633			-.3147	
.905			-.3207					
.919		-.2285						
.950				-.3172	-.3899	-.2853		
.953			-.2440					
.955		-.1700						
.965	-.1490							
1.000			-.1316		-.1263		-.0978	

ALPHA (1) = -3.963 BETA (2) = .195 MACH = .90037 Q = 600.12 P = 1057.6 RN/L = 3.5768

SECTION (1)LEFT WING BOT SURF DEPENDENT VARIABLE CP

X/CW \ 2Y/BW	.2990	.3640	.4270	.5340	.6730	.7800	.8870	.9720
.010	-.0474	-.1247	-.3294	-1.0733	-1.2769	-1.0685	-1.1016	
.020	.0000	-.0963	-.3768	-1.2332	-1.3372	-1.3582	-1.1484	-.6942
.040		-.0753	-.4706					
.050	-.0529			-1.1106	-1.2692	-1.2870	-1.1570	
.069								
.080				-.6920				-.6377
.081			-.3865					
.086		-.0273						
.094	-.0594							
.157				-.5115	-.6703	-1.0363	-.9648	
.157								
.163		-.0878						-.3758
.177			-.4076					
.229	-.0112							
.245		-.2445						
.250				-.3661	-.3949	-.6476	-.8220	
.274			-.3254					
.345								
.390		-.2937						-.4828
.400				-.2743	-.2819		-.6121	
.402			-.2527					
.500								
.550				-.3121	-.3351			-.4385
.565			-.7176					
.630							-.3564	

AMES 11-073(OA148) -140A/B/C/R ORB LEFT WING BOT (XE8L65)

ALPHA (1) = -3.963 BETA (2) = .195

SECTION (1)LEFT WING BOT SURF DEPENDENT VARIABLE CP

2Y/BW	.2990	.3640	.4270	.5340	.6730	.7800	.8870	.9720
X/CW								
.637		-.2922						
.650						-.2958		
.670								-.4926
.700					-.2925			
.725				-.3343				
.750						-.5781	-.5559	
.760			-.2750					
.775				-.7218	-.6797			
.798		-.3475						
.808			-.5885					
.834	-.3665							
.839		-.5936						
.850				-.4141	-.5481	-.4090		
.857			-.4047					
.862								-.4300
.865	-.7086							
.879		-.3666						
.900	-.4075			-.3168			-.3219	
.905			-.3631					
.919		-.2630						
.950				-.2779	-.3131	-.2906		
.953			-.2837					
.955		-.2092						
.955	-.1763							
1.000			-.1421		-.1223		-.1645	

ALPHA (1) = -3.957 BETA (3) = 4.274 MACH = .90037 Q = 600.12 P = 1057.6 RN/L = 3.5768

SECTION (1)LEFT WING BOT SURF DEPENDENT VARIABLE CP

2Y/BW	.2990	.3640	.4270	.5340	.6730	.7800	.8870	.9720
X/CW								
.010	.0092	-.0032	-.1581	-1.0322	-1.2777	-1.0918	-.9615	
.020	.0000	.0076	-.2106	-1.0807	-1.2982	-1.1645	-.9280	-.6267
.040		.0241	-.3070					
.050	-.0086			-.6737	-1.2334	-1.1220	-.9180	
.069								-.5977
.080				-.5327				
.091			-.3051					
.096		.0383						
.094	-.0153							
.100				-.4306	-.5197	-.9027	-.8903	
.157								-.3615
.163		-.0268						

AMES 11-073(OA148) -140A/B/C/R ORB LEFT WING BOT (XEBL65)

ALPHA (1) = -3.957 BETA (3) = 4.274

SECTION (1)LEFT WING BOT SURF DEPENDENT VARIABLE CP

2Y/BW	.2900	.3640	.4270	.5340	.6730	.7800	.8870	.9720
X/CW								
.177			-.3094					
.229	.0178							
.246		-.2009						
.250				-.3313	-.3510	-.5598	-.7720	
.274			-.2843					
.345								-.4546
.390		-.2488						
.400				-.2549	-.2603		-.5762	
.402			-.2283					
.503								-.3925
.550				-.3073	-.3607			
.565			-.7595					
.600							-.3376	
.637		-.2915						
.650						-.3763		
.670								-.4378
.700					-.3760			
.725				-.3922				
.750						-.5569	-.5778	
.760			-.3387					
.775				-.5950	-.6170			
.799		-.3759						
.808			-.6559					
.834	-.3733							
.839		-.5740						
.850				-.3553	-.3949	-.3905		
.857			-.3434					
.862								-.3594
.865	-.7016							
.879		-.3415						
.900	-.3991			-.3324			-.2809	
.905			-.3195					
.919		-.2521						
.940				-.3231	-.2336	-.2876		
.953			-.2758					
.955		-.2025						
.965	-.2068							
1.000			-.1855		-.1339		-.1272	

AMES 11-073(OA148) -140A/B/C/R ORB LEFT WING BOT (XEBL65)

ALPHA (2) = .052 BETA (1) = -3.869 MACH = .90007 Q = 599.62 P = 1057.3 RN/L = 3.5759

SECTION (1)LEFT WING BOT SURF DEPENDENT VARIABLE CP

2Y/BW	.2990	.3640	.4270	.5340	.6730	.7800	.8870	.9720
X/CW								
.010	.0400	.0861	.0873	-.6719	-.8380	-.7707	-.6427	
.020	.0000	.0698	-.0105	-.6386	-.7814	-.7818	-.9426	-.3390
.040		.0766	-.1777					
.050	.0031			-.5378	-.6109	-.6973	-.8013	
.069								-.3602
.080				-.3625				
.081			-.2064					
.086		.0911						
.094	-.0108							
.150				-.2219	-.2262	-.2624	-.2908	
.157								-.2341
.163		.0197						
.177			-.1858					
.229	.0282							
.246		-.1367						
.250				-.1590	-.2030	-.2405	-.2594	
.274			-.1318					
.345								-.2764
.390		-.1093						
.400				-.1313	-.1399		-.1996	
.402			-.0927					
.503								-.2141
.550				-.2044	-.2168			
.565			-.8417					
.600							-.2908	
.637		-.1991						
.650						-.3236		
.670								-.5642
.700					-.2780			
.725				-.2870				
.750						-.4804	-.7651	
.760			-.2116					
.775				-.6425	-.6159			
.798		-.2545						
.809			-.7193					
.834	-.3039							
.839		-.6971						
.850				-.3855	-.5190	-.3746		
.857			-.3834					
[illegible]								-.2108
.865	-.6542							
.879		-.3519						
.900	-.3742			-.3445			-.2057	
[illegible]			-.3185					
.912		-.2260						

AMES 11-073(OA148) -140A/B/C/R ORB LEFT WING BOT (XEBL65)

ALPHA (2) = .052 BETA (1) = -3.869

SECTION (1)LEFT WING BOT SURF DEPENDENT VARIABLE CP

2Y/BW	.2990	.3640	.4270	.5340	.6730	.7800	.8870	.9720
X/CW								
.950				-.3168	-.4044	-.2842		
.953			-.2569					
.955		-.1815						
.965	-.1445							
1.000			-.1391		-.1496		-.0994	

ALPHA (2) = .054 BETA (2) = .179 MACH = .90007 Q = 599.62 P = 1057.3 RN/L = 3.5759

SECTION (1)LEFT WING BOT SURF DEPENDENT VARIABLE CP

2Y/BW	.2990	.3640	.4270	.5340	.6730	.7800	.8870	.9720
X/CW								
.010	.0283	.1088	.1810	-.4748	-.6839	-.7113	-.6306	
.020	.0000	.1093	.0987	-.4759	-.5936	-.6440	-.8080	-.3401
.040		.1254	-.0685					
.050	.0206			-.3703	-.4702	-.5620	-.6891	
.069								-.3496
.080				-.2839				
.081			-.1269					
.085		.1322						
.094	.0082							
.150				-.1925	-.2112	-.2334	-.3313	
.157								-.2493
.163		.0753						
.177			-.1425					
.229	.0437							
.246		-.0936						
.250				-.1447	-.1953	-.2311	-.2675	
.274			-.1172					
.345								-.3138
.390		-.0955						
.400				-.1378	-.1558		-.2214	
.402			-.0945					
.503								-.2038
.550				-.2166	-.2311			
.555			-.8411					
.600							-.3505	
.637		-.2027						
.650						-.3472		
.670								-.5600
.700					-.3008			
.725				-.2988				
.750						-.4875	-.7408	
.760			-.2285					

AMES 11-073(OA148) -140A/B/C/R ORB LEFT WING BOT (XE8L65)

ALPHA (2) = .054 BETA (2) = .179

SECTION (1)LEFT WING BOT SURF DEPENDENT VARIABLE CP

2Y/BW	.2990	.3640	.4270	.5340	.6730	.7800	.8870	.9720
X/CW								
.775				-.6512	-.6258			
.798		-.2718						
.809			-.7163					
.834	-.3047							
.839		-.6875						
.850				-.3718	-.4569	-.3668		
.857			-.3620					
.862								-.1958
.865	-.6610							
.879		-.3569						
.900	-.4116			-.3457			-.2166	
.905			-.3189					
.919		-.2411						
.950				-.3206	-.3257	-.2840		
.953			-.2784					
.955		-.1893						
.965	-.1661							
1.000			-.1686		-.1466		-.1109	

ALPHA (2) = .050 BETA (3) = 4.252 MACH = .90007 Q = 599.62 P = 1057.3 RN/L = 3.5759

SECTION (1)LEFT WING BOT SURF DEPENDENT VARIABLE CP

2Y/BW	.2990	.3640	.4270	.5340	.6730	.7800	.8870	.9720
X/CW								
.010	-.0099	.0817	.2290	-.3031	-.5128	-.5780	-.5555	
.020	.0000	.1042	.1670	-.3586	-.4291	-.5012	-.6376	-.3046
.040		.1205	.0187					
.050	.0143			-.2568	-.3677	-.4232	-.4891	
.069								-.3330
.080				-.2183				
.091			-.0661					
.096		.1430						
.094	.0130							
.150				-.1560	-.1775	-.2104	-.3157	
.157								-.2498
.183		.1084						
.177			-.1021					
.199	.0495							
.246		-.0605						
[illegible]				-.1284	-.1754	-.2097	-.2676	
[illegible]			-.0943					
[illegible]								-.3366
[illegible]		-.0725						

AMES 11-073(OA148) -140A/B/C/R ORB LEFT WING BOT (XE8L65)

ALPHA (2) = .050 BETA (3) = 4.252

SECTION (1)LEFT WING BOT SURF DEPENDENT VARIABLE CP

2Y/BW	.2990	.3640	.4270	.5340	.6730	.7800	.8870	.9720
X/CW								
.400				-.1343	-.1516		-.2230	
.402			-.0953					
.503								-.2338
.550				-.2205	-.2432			
.555			-.8514					
.600							-.3857	
.637		-.1995						
.650						-.3666		
.670								-.5136
.700					-.3127			
.725				-.3041				
.750						-.5242	-.6984	
.750			-.2613					
.775				-.6408	-.6379			
.798		-.2995						
.808			-.7126					
.834	-.3106							
.839		-.6275						
.850				-.3503	-.4185	-.3443		
.857			-.3352					
.862								-.1726
.865	-.6622							
.879		-.3506						
.900	-.4036			-.3302			-.2254	
.905			-.3082					
.919		-.2443						
.950				-.3212	-.2543	-.2758		
.953			-.2521					
.955		-.1850						
.965	-.2072							
1.000			-.1495		-.1365		-.1147	

ALPHA (3) = 4.021 BETA (1) = -3.873 MACH = .89817 Q = 598.16 P = 1059.3 RN/L = 3.5705

SECTION (1)LEFT WING BOT SURF DEPENDENT VARIABLE CP

2Y/BW	.2990	.3640	.4270	.5340	.6730	.7800	.8870	.9720
X/CW								
.010	.0195	.1216	.3951	.0986	.0268	.1121	.1293	
.020	.0000	.1680	.3341	-.0284	-.0021	-.0051	-.0280	-.1077
.040		.1905	.1649					
.050	.0579			-.0411	-.0546	-.0485	-.0637	
.069								-.1639
.080				-.0415				

AMES 11-073(OA148) -140A/B/C/R ORB LEFT WING BOT (XE8L65)

ALPHA (3) = 4.021 BETA (1) = -3.873

SECTION (1)LEFT WING BOT SURF DEPENDENT VARIABLE CP

2Y/BW	.2990	.3640	.4270	.5340	.6730	.7800	.8870	.9720
X/CW								
.081			.0617					
.086		.2260						
.094	.0560							
.150				-.0027	-.0087	-.0188	-.0833	
.157								-.1795
.153		.1941						
.177			.0225					
.229	.0961							
.246		.0332						
.250				.0038	-.0272	-.0496	-.1058	
.274			.0194					
.345								-.2397
.390		.0239						
.400				-.0214	-.0312		-.1221	
.402			.0175					
.503								-.2952
.550				-.1247	-.1438			
.565			-.8948					
.600							-.3039	
.637		-.1199						
.650						-.2785		
.670								-.6131
.700					-.2555			
.725				-.1824				
.750						-.6411	-.7280	
.760			-.1636					
.775				-.6845	-.6571			
.799		-.1923						
.809			-.7451					
.834	-.2211							
.839		-.6808						
.850				-.4127	-.5843	-.4006		
.857			-.3835					
.852								-.1791
.865	-.6249							
.879		-.3545						
.900	-.3848			-.3293			-.1989	
.905			-.2744					
.919		-.2079						
.950				-.2842	-.2939	-.1913		
.973			-.2189					
.985		-.1503						
.985	-.1225							
1.000			-.1116		-.0770		-.1082	

AMES 11-073(OA148) -140A/B/C/R ORB LEFT WING BOT (XEBL65)

ALPHA (3) = 4.021 BETA (2) = .183 MACH = .89817 Q = 598.16 P = 1059.3 RN/L = 3.5705

SECTION (1)LEFT WING BOT SURF DEPENDENT VARIABLE CP

2Y/BW	.2990	.3640	.4270	.5340	.6730	.7800	.8870	.9720
X/CW								
.010	-.0785	-.0057	.3653	.1707	.0793	.1463	.1420	
.020	.0000	.0920	.3429	.0556	.0424	.0350	-.0019	-.2089
.040		.1330	.2065					
.050	.0190			.0261	-.0221	-.0240	-.0504	
.069								-.2397
.080				.0050				
.091			.0963					
.095		.2096						
.094	.0378							
.150				.0094	-.0013	-.0205	-.0935	
.157								-.2134
.163		.2105						
.177			.0424					
.229	.0874							
.245		.0528						
.250				.0024	-.0286	-.0554	-.1234	
.274			.0215					
.345								-.2994
.390		.0325						
.400				-.0347	-.0457		-.1448	
.402			.0033					
.503								-.3544
.550				-.1337	-.1573			
.545			-.9396					
.600							-.3261	
.637		-.1247						
.650						-.3002		
.670								-.6053
.700					-.2420			
.725				-.2067				
.750						-.6449	-.7315	
.760			-.1840					
.775				-.6925	-.6444			
.798		-.2206						
.808			-.7329					
.834	-.2332							
.839		-.6607						
.850				-.3582	-.5319	-.3531		
.857			-.3558					
.862								-.1579
.875	-.5934							
.879		-.3792						
.900	-.4222			-.3249			-.2122	
.905			-.2799					
.919		-.2270						

AMES 11-073(OA148) -140A/B/C/R ORB LEFT WING BOT (XEBL65)

ALPHA (3) = 4.021 BETA (2) = .183

SECTION (1)LEFT WING BOT SURF DEPENDENT VARIABLE CP

2Y/BW	.2990	.3640	.4270	.5340	.6730	.7800	.8870	.9720
X/CW								
.950				-.3085	-.2570	-.2036		
.953			-.2498					
.955		-.1631						
.965	-.1668							
1.000			-.1449		-.0906		-.0897	

ALPHA (3) = 4.023 BETA (3) = 4.246 MACH = .89817 Q = 598.16 P = 1059.3 RN/L = 3.5705

SECTION (1)LEFT WING BOT SURF DEPENDENT VARIABLE CP

2Y/BW	.2990	.3640	.4270	.5340	.6730	.7800	.8870	.9720
X/CW								
.010	-.2060	-.1541	.2946	.2397	.1439	.1979	.1866	
.020	.0000	-.0126	.3204	.1295	.0967	.0883	.0637	-.3565
.040		.0399	.2301					
.050	-.0361			.0812	.0245	.0155	-.0056	
.069								-.3230
.080				.0433				
.081			.1260					
.085		.1725						
.094	.0032							
.150				.0301	.0095	-.0021	-.0950	
.157								-.2516
.163		.2146						
.177			.0580					
.229	.0705							
.246		.0707						
.250				.0098	-.0214	-.0445	-.1329	
.274			.0305					
.345								-.3603
.390		.0425						
.400				-.0344	-.0439		-.1517	
.402			.0063					
.503								-.3897
.550				-.1374	-.1595			
.565			-.9366					
.600							-.3285	
.637		-.1219						
.650						-.3177		
.670								-.6202
.700					-.2388			
.725				-.2159				
.750						-.6456	-.7358	
.760			-.2095					

AMES 11-073(OA148) -140A/B/C/R ORB LEFT WING BOT (XE8L65)

ALPHA (3) = 4.023 BETA (3) = 4.246

SECTION (1)LEFT WING BOT SURF DEPENDENT VARIABLE CP

2Y/BW	.2990	.3640	.4270	.5340	.6730	.7800	.8870	.9720
X/CW								
.775				-.6867	-.6145			
.798		-.2365						
.808			-.7239					
.834	-.2442							
.839		-.6185						
.850				-.3379	-.4441	-.3637		
.857			-.3377					
.862								-.1436
.865	-.5876							
.879		-.3858						
.900	-.4150			-.3138			-.2492	
.905			-.2647					
.919		-.2335						
.950				-.2882	-.2359	-.2636		
.953			-.2258					
.955		-.1667						
.966	-.2158							
1.000			-.1334		-.1080		-.1023	

ALPHA (4) = 7.876 BETA (1) = -3.866 MACH = .89873 Q = 598.61 P = 1058.8 RN/L = 3.5706

SECTION (1)LEFT WING BOT SURF DEPENDENT VARIABLE CP

2Y/BW	.2990	.3640	.4270	.5340	.6730	.7800	.8870	.9720
X/CW								
.010	-.1502	-.1576	.4152	.4846	.4412	.4970	.4630	
.020	.0000	.0645	.4639	.3650	.3712	.3718	.3473	-.2727
.040		.1274	.3742					
.050	.0403			.2583	.2511	.2569	.2392	
.069								-.1981
.080				.2110				
.081			.2579					
.086		.2790						
.094	.0745							
.150				.1760	.1766	.1707	.0920	
.157								-.1881
.163		.3225						
.177			.1849					
.229	.1519							
.246		.1761						
.250				.1431	.1208	.0956	.0254	
.274			.1489					
.346								-.2073
.390		.1444						

AMES 11-073(OA148) -140A/B/C/R ORB LEFT WING BOT (XE8L65)

ALPHA (4) = 7.876 BETA (1) = -3.866

SECTION (1)LEFT WING BOT SURF DEPENDENT VARIABLE CP

2Y/BW	.2990	.3640	.4270	.5340	.6730	.7800	.8870	.9720
X/CW								
.400				.0802	.0689		-.0355	
.402			.1129					
.503								-.2530
.550				-.0402	-.0659			
.565			-.6347					
.600							-.2350	
.637		-.0410						
.650						-.2058		
.670								-.6035
.700					-.2260			
.725				-.1653				
.750						-.6369	-.6933	
.760			-.1571					
.775				-.7058	-.6114			
.798		-.1733						
.808			-.7216					
.834	-.2143							
.839		-.6724						
.850				-.7625	-.5223	-.8191		
.857			-.4798					
.862								-.4839
.865	-.6227							
.879		-.4741						
.900	-.4397			-.3067			-.8376	
.905			-.2893					
.919		-.2295						
.950				-.2409	-.3278	-.4232		
.953			-.1945					
.955		-.1572						
.965	-.1404							
1.000			-.1029		-.2187		-.2928	

ALPHA (4) = 7.884 BETA (2) = .183 MACH = .89873 Q = 598.61 P = 1058.8 RN/L = 3.5708

SECTION (1)LEFT WING BOT SURF DEPENDENT VARIABLE CP

2Y/BW	.2990	.3640	.4270	.5340	.6730	.7800	.8870	.9720
X/CW								
.010	-.3483	-.3704	.2793	.4872	.4230	.4569	.4074	
.020	.0000	-.0827	.3859	.3848	.3739	.3645	.3221	-.4410
.040		-.0012	.3609					
.050	-.0314			.2819	.2611	.2527	.2171	
.069								-.3308
.080				.2266				

AMES 11-073(OA148) -140A/B/C/R ORB LEFT WING BOT (XEBL65)

ALPHA (4) = 7.884 BETA (2) = .183

SECTION (1)LEFT WING BOT SURF DEPENDENT VARIABLE CP

2Y/BW	.2990	.3640	.4270	.5340	.6730	.7800	.8870	.9720
X/CW								
.081			.2646					
.086		.2209						
.094	.0283							
.150				.1739	.1723	.1661	.0717	
.157								-.2385
.163		.3099						
.177			.1882					
.229	.1243							
.245		.1757						
.250				.1375	.1215	.0896	.0030	
.274			.1512					
.345								-.2827
.390		.1442						
.400				.0760	.0616		-.0601	
.402			.1090					
.503								-.2826
.550				-.0468	-.0740			
.565			-.6686					
.600							-.2684	
.637		-.0398						
.650						-.2138		
.670								-.6165
.700					-.2160			
.725				-.1663				
.750						-.6555	-.6641	
.760			-.1678					
.775				-.7152	-.6176			
.798		-.1886						
.808			-.7253					
.834	-.2146							
.839		-.6523						
.850				-.6131	-.5199	-.8262		
.857			-.6323					
.862								-.5215
.865	-.5981							
.879		-.5510						
.900	-.4485			-.3168			-.7124	
.905			-.3166					
.919		-.2856						
.950				-.2541	-.3478	-.4088		
.953			-.2027					
.955		-.1708						
.965	-.1997							
1.000			-.0974		-.1940		-.3002	

AMES 11-073(OA148) -140A/B/C/R ORB LEFT WING BOT (XE8L65)

ALPHA (4) = 7.882 BETA (3) = 4.244 MACH = .89873 Q = 598.61 P = 1058.8 RN/L = 3.5706

SECTION (1)LEFT WING BOT SURF DEPENDENT VARIABLE CP

2Y/BW	.2990	.3640	.4270	.5340	.6730	.7800	.8870	.9720
X/CW								
.010	-.5283	-.3409	.1080	.4466	.3932	.4038	.3477	
.020	.0000	-.1657	.2665	.3775	.3554	.3441	.2964	-.4979
.040		-.0868	.3156					
.050	-.1220			.2868	.2553	.2420	.2078	
.069								-.3837
.080				.2279				
.081			.2511					
.086		.1470						
.094	-.0298							
.150				.1720	.1743	.1532	.0599	
.157								-.2391
.163		.2770						
.177			.1856					
.229	.0904							
.246		.1607						
.250				.1294	.1068	.0807	-.0137	
.274			.1450					
.345								-.2566
.390		.1384						
.400				.0619	.0479		-.0735	
.402			.0971					
.503								-.2876
.550				-.0507	-.0836			
.565			-.6745					
.600							-.2707	
.647		-.0453						
.650						-.2207		
.670								-.5830
.700					-.2186			
.725				-.1844				
.750						-.6808	-.6392	
.760			-.1943					
.775				-.7246	-.6283			
.798		-.2127						
.808			-.7115					
.834	-.2231							
.839		-.6161						
.850				-.5674	-.5259	-.8059		
.857			-.6541					
.862								-.5472
.865	-.5842							
.879		-.5682						
.900	-.4443			-.3138			-.9015	
.905			-.3380					
.919		-.3414						

AMES 11-073(OA148) -140A/B/C/R ORB LEFT WING BOT (XE8L65)

ALPHA (4) = 7.882 BETA (3) = 4.244

SECTION (1)LEFT WING BOT SURF DEPENDENT VARIABLE CP

2Y/BW	.2990	.3640	.4270	.5340	.6730	.7800	.8870	.9720
X/CW								
.950				-.2248	-.3337	-.4855		
.953			-.1841					
.955		-.1721						
.965	-.2785							
1.000			-.0832		-.1929		-.3723	

ALPHA (5) = 11.907 BETA (1) = -3.854 MACH = .89780 Q = 598.05 P = 1060.0 RN/L = 3.5707

SECTION (1)LEFT WING BOT SURF DEPENDENT VARIABLE CP

2Y/BW	.2990	.3640	.4270	.5340	.6730	.7800	.8870	.9720
X/CW								
.010	-.4642	-.5646	.2145	.6273	.6020	.5873	.5305	
.020	.0000	-.1374	.4200	.5677	.5623	.5535	.5039	-.3527
.040		-.0301	.4824					
.050	-.0117			.4661	.4574	.4488	.4122	
.063								-.2148
.080				.3978				
.081			.4063					
.086		.2785						
.094	.0734							
.150				.3261	.3309	.3229	.2395	
.157								-.1809
.163		.4139						
.177			.3179					
.229	.1986							
.246		.2970						
.250				.2645	.2546	.2312	.1504	
.274			.2671					
.345								-.1232
.390		.2503						
.400				.1798	.1709		.0622	
.402			.2090					
.503								-.1996
.550				.0465	.0204			
.565			-.5802					
.600							-.1612	
.637		.0423						
.650						-.1424		
.670								-.5866
.700					-.1944			
.725				-.1863				
.750						-.5939	-.5827	
.760			-.2063					

AMES 11-073(OA148) -140A/B/C/R ORB LEFT WING BOT (XE8L65)

ALPHA (5) = 11.907 BETA (1) = -3.854

SECTION (1)LEFT WING BOT SURF DEPENDENT VARIABLE CP

2Y/BW	.2990	.3640	.4270	.5340	.6730	.7800	.8870	.9720
X/CW								
.775				-.6593	-.6526			
.798		-.1929						
.808			-.6489					
.834	-.2259							
.839		-.6519						
.850				-.8082	-.6125	-.7695		
.857			-.6940					
.862								-.5622
.865	-.6306							
.879		-.5711						
.900	-.4090			-.6322			-.8140	
.905			-.5356					
.919		-.5957						
.950				-.2839	-.6374	-.8419		
.953			-.2791					
.955		-.2358						
.965	-.2771							
1.000			-.1691		-.3627		-.4885	

ALPHA (5) = 11.920 BETA (2) = .190 MACH = .89780 Q = 598.05 P = 1060.0 RN/L = 3.5707

SECTION (1)LEFT WING BOT SURF DEPENDENT VARIABLE CP

2Y/BW	.2990	.3640	.4270	.5340	.6730	.7800	.8870	.9720
X/CW								
.010	-.6924	-.4142	.0015	.5432	.5204	.4778	.4203	
.020	.0000	-.2075	.2645	.5231	.5095	.4942	.4280	-.5030
.040		-.1115	.4091					
.050	-.1141			.4446	.4379	.4111	.3630	
.069								-.3481
.080				.3813				
.081			.3749					
.086		.1901						
.094	.0090							
.150				.3078	.3163	.3007	.2051	
.157								-.2337
.163		.3694						
.177			.3065					
.229	.1576							
.246		.2726						
.250				.2460	.2347	.2096	.1178	
.274			.2560					
.345								-.1961
.330		.2489						

AMES 11-073(OA148) -140A/B/C/R ORB LEFT WING BOT (XEBL65)

ALPHA (5) = 11.920 BETA (2) = .190

SECTION : 11LEFT WING BOT SURF DEPENDENT VARIABLE CP

Z/ BW	.2990	.3640	.4270	.5340	.6730	.7800	.8870	.9720
X/ CW								
.000				.1625	.1518		.0257	
.002			.1961					
.003								-.2613
.050				.0376	.0056			
.065			-.5955					
.070							-.1974	
.077		.0352						
.080						-.1650		
.090								-.5933
.100					-.2019			
.125				-.1990				
.150						-.6239	-.6053	
.160			-.2240					
.175				-.6578	-.6831			
.199		-.2099						
.203			-.6609					
.204	-.2269							
.209		-.6325						
.250				-.8095	-.6297	-.8016		
.267			-.6555					
.282								-.6052
.265	-.6230							
.279		-.5563						
.300	-.4138			-.7258			-.8621	
.305			-.7149					
.319		-.6046						
.350				-.3364	-.5855	-.8376		
.353			-.3036					
.355		-.2801						
.365	-.4091							
1.000			-.1435		-.3249		-.5092	

ALPHA (5) = 11.907 BETA (3) = 4.258 MACH = .89780 Q = 598.05 P = 1860.0 RN/L = 3.5707

SECTION : 11LEFT WING BOT SURF DEPENDENT VARIABLE CP

Z/ BW	.2990	.3640	.4270	.5340	.6730	.7800	.8870	.9720
X/ CW								
.010	-.7960	-.3906	-.2196	.4367	.4220	.3476	.3005	
.020	.0000	-.3178	.0914	.4550	.4419	.4170	.3495	-.6587
.040		-.2267	.3151					
.060	-.2120			.4032	.3956	.3619	.3150	
.080								-.4761
.100				.3530				

AMES 11-073(OA148) -140A/B/C/R ORB LEFT WING BOT (XE8L65)

ALPHA (5) = 11.907 BETA (3) = 4.258

SECTION (1)LEFT WING BOT SURF DEPENDENT VARIABLE CP

2Y/BW	.2990	.3640	.4270	.5340	.6730	.7800	.8870	.9720
X/CW								
.081			.3263					
.086		.0991						
.094	-.0717							
.150				.2812	.2861	.2701	.1590	
.157								-.3017
.163		.3075						
.177			.2833					
.229	.0992							
.246		.2366						
.250				.2197	.2075	.1852	.0838	
.274			.2329					
.345								-.2691
.390		.2226						
.400				.1379	.1286		-.0090	
.402			.1716					
.503								-.3206
.550				.0168	-.0122			
.565			-.6274					
.600							-.2317	
.637		.0211						
.650						-.1796		
.670								-.6606
.700					-.2087			
.725				-.2333				
.750						-.6580	-.6259	
.760			-.2585					
.775				-.6452	-.7101			
.798		-.2559						
.808			-.6569					
.834	-.2483							
.939		-.6181						
.850				-.7952	-.6954	-.8136		
.857			-.6089					
.862								-.6651
.865	-.6252							
.879		-.5528						
.900	-.4443			-.8568			-.8896	
.905			-.7058					
.919		-.6033						
.950				-.3325	-.5868	-.8620		
.953			-.3227					
.955		-.3734						
.965	-.5027							
1.000			-.1533		-.2752		-.5291	

DATE 10 FEB 76 TABULATED PRESSURE DATA - OA148 (AMES 11-073-1)

AMES 11-073(OA148) -140A/B/C/R ORB LEFT WING BOT (XE8L66) (05 AUG 75)

REFERENCE DATA

SREF = 2000.0000 SQ.FT. XMRP = 1076.6800 IN. XO
LREF = 474.8000 IN. YMRP = .0000 IN. YO
BREF = 935.0680 IN. ZMRP = 375.0000 IN. ZO
SCALE = .0300

PARAMETRIC DATA

RUDDER = 5.000 SPDBRK = 55.000
BDFLAP = 16.300 L-ELVN = -4.000
R-ELVN = -4.000 MACH = .600

ALPHA (I) = -4.037 BETA (I) = -7.846 MACH = .59482 Q = 591.26 P = 2387.4 RN/L = 4.8005

SECTION (1)LEFT WING BOT SURF DEPENDENT VARIABLE CP

2Y/B	.2990	.3640	.4270	.5340	.6730	.7800	.8870	.9720
X/C								
.010	-.3058	-.6924	-1.1655	-2.1110	-1.8016	-1.5912	-1.5097	
.020	.0000	-.5979	-1.2051	-1.9424	-1.6862	-1.3193	-1.3677	-1.1313
.040		-.5583	-1.0308					
.060	-.2578			-.9750	-1.1923	-1.1782	-1.1269	
.080								-1.0214
.100				-.7389				
.120			-.6462					
.140		-.3567						
.160	-.2359							
.180				-.4950	-.5583	-.6569	-.6422	
.200								-.3750
.220		-.3900						
.240			-.4081					
.260	-.1920							
.280		-.3897						
.300				-.3352	-.3868	-.4374	-.4451	
.320			-.2909					
.340								-.4302
.360		-.2575						
.380				-.2502	-.2745		-.3263	
.400			-.2080					
.420								-.4532
.440				-.2706	-.2830			
.460			-.2052					
.480							-.3593	
.500		-.2490						
.520						-.3324		
.540								-.5509
.560					-.3284			
.580				-.2993				
.600						-.5353	-.5010	
.620			-.2816					
.640				-.6646	-.4213			
.660		-.3142						
.680			-.5838					
.700	-.2591							
.720		-.3574						
.740				-.3396	-.3499	-.2791		

AMES 11-073(OA148) -140A/B/C/R ORB LEFT WING BOT (XEBL66)

ALPHA (1) = -4.037 BETA (1) = -7.846

SECTION (1)LEFT WING BOT SURF DEPENDENT VARIABLE CP

2Y/BW	.2990	.3640	.4270	.5340	.6730	.7800	.8870	.9720
X/CW								
.857			-.2849					
.862								-.4224
.865	-.3823							
.879		-.2720						
.900	-.2138			-.2162			-.2122	
.905			-.1795					
.919		-.1668						
.950				-.0986	-.3301	-.0844		
.953			-.0706					
.955		-.0782						
.965	-.0654							
1.000			.0037		-.0562		-.0275	

ALPHA (1) = -3.899 BETA (2) = -3.843 MACH = .59482 Q = 591.26 P = 2387.4 RN/L = 4.8005

SECTION (1)LEFT WING BOT SURF DEPENDENT VARIABLE CP

2Y/BW	.2990	.3640	.4270	.5340	.6730	.7800	.8870	.9720
X/CW								
.010	-.1970	-.4599	-.8500	-2.0858	-2.1088	-1.7774	-1.6357	
.020	.0000	-.3885	-.9214	-1.8891	-1.9484	-1.4280	-1.5263	-.9817
.040		-.3552	-.7947					
.050	-.1747			-.9062	-.9959	-1.1494	-1.1369	
.069								-.8896
.080				-.6766				
.081			-.5500					
.086		-.2457						
.094	-.1637							
.150				-.4344	-.4842	-.5584	-.5795	
.157								-.3352
.163		-.3005						
.177			-.3583					
.223	-.1305							
.245		-.3359						
.250				-.3071	-.3571	-.4006	-.4059	
.274			-.2771					
.345								-.3965
.370		-.2391						
.400				-.2392	-.2572		-.3099	
.402			-.2060					
.477								-.4049
.500				-.2645	-.2840			
.505			-.1767					
.600							-.3522	

AMES 11-073(OA148) -140A/B/C/R ORB LEFT WING BOT (XEBL68)

ALPHA (1) = -3.899 BETA (2) = -3.843

SECTION (1)LEFT WING BOT SURF DEPENDENT VARIABLE CP

2Y/BW	.2990	.3640	.4270	.5340	.6730	.7800	.8870	.9720
X/CW								
.637		-.2448						
.650						-.3359		
.670								-.5033
.700					-.3369			
.725				-.3002				
.750						-.5468	-.5067	
.760			-.2824					
.775				-.6936	-.4332			
.798		-.3181						
.809			-.5978					
.834	-.2646							
.839		-.4013						
.850				-.3440	-.3393	-.2842		
.857			-.3056					
.862								-.4538
.865	-.4141							
.879		-.2838						
.900	-.2499			-.2209			-.2110	
.905			-.1875					
.919		-.1839						
.950				-.0987	-.2904	-.0852		
.953			-.0785					
.955		-.0923						
.965	-.0968							
1.000			-.0112		-.0331		-.0112	

ALPHA (1) = -3.894 BETA (3) = .194 MACH = .59482 Q = 591.26 P = 2387.4 RN/L = 4.8005

SECTION (1)LEFT WING BOT SURF DEPENDENT VARIABLE CP

2Y/BW	.2990	.3640	.4270	.5340	.6730	.7800	.8870	.9720
X/CW								
.010	-.1038	-.2460	-.5846	-1.8513	-2.0316	-1.9934	-1.8301	
.020	.0000	-.2098	-.6454	-1.4113	-1.6457	-1.5439	-1.7010	-.8306
.040		-.2027	-.5975					
.050	-.1036			-.8013	-.8925	-1.0536	-1.1168	
.069								-.6600
.080				-.6016				
.081			-.4506					
.086		-.1363						
.094	-.0968							
.150				-.3926	-.4394	-.4992	-.5126	
.157								-.3166
.163		-.2046						

AMES 11-073(OA148) -140A/B/C/R ORB LEFT WING BOT (XEBL66)

ALPHA (1) = -3.894 BETA (3) = .194

SECTION (1)LEFT WING BOT SURF DEPENDENT VARIABLE CP

2Y/BW	.2990	.3640	.4270	.5340	.6730	.7800	.8870	.9720
X/CW								
.177			-.3171					
.229	-.0789							
.246		-.2852						
.250				-.2845	-.3337	-.3675	-.3617	
.274			-.2501					
.345								-.3711
.390		-.2193						
.400				-.2272	-.2506		-.2853	
.402			-.1941					
.503								-.3857
.550				-.2502	-.2733			
.565			-.1726					
.600							-.3261	
.637		-.2360						
.650						-.3230		
.670								-.5073
.700					-.3266			
.725				-.2949				
.750						-.5394	-.4902	
.760			-.2898					
.775				-.7231	-.4385			
.799		-.3162						
.808			-.5870					
.834	-.2652							
.839		-.3984						
.850				-.3402	-.3188	-.2852		
.857			-.3176					
.952								-.4491
.865	-.4286							
.879		-.2919						
.900	-.2729			-.2109			-.1945	
.905			-.2032					
.919		-.2004						
.950				-.0994	-.2378	-.0831		
.953			-.0908					
.955		-.1104						
.965	-.1470							
1.000			-.0051		-.0112		-.0060	

AMES 11-073(OA148) -140A/B/C/R ORB LEFT WING BOT (XE8L66)

ALPHA (1) = -3.902 BETA (4) = 4.271 MACH = .59482 Q = 591.26 P = 2387.4 RN/L = 4.8005

SECTION (1)LEFT WING BOT SURF DEPENDENT VARIABLE CP

2Y/SW	.2990	.3640	.4270	.5340	.6730	.7800	.8870	.9720
X/CW								
.010	-.0471	-.1080	-.3742	-1.4846	-1.6658	-2.1145	-1.9619	
.020	.0000	-.0916	-.4260	-1.1766	-1.3362	-1.4843	-1.7829	-.7190
.040		-.0795	-.4403					
.050	-.0570			-.6686	-.7719	-.8590	-.9178	
.069								-.5363
.080				-.5123				
.081			-.3582					
.085		-.0584						
.094	-.0596							
.150				-.3363	-.3857	-.4205	-.4361	
.157								-.2682
.163		-.1346						
.177			-.2763					
.229	-.0436							
.246		-.2304						
.250				-.2583	-.3010	-.3281	-.3264	
.274			-.2219					
.345								-.3020
.390		-.1872						
.400				-.2093	-.2286		-.2546	
.402			-.1816					
.503								-.3238
.550				-.2421	-.2595			
.555			-.1868					
.600							-.3081	
.637		-.2247						
.650						-.3073		
.670								-.4395
.700					-.3166			
.725				-.2924				
.750						-.5142	-.4705	
.760			-.2942					
.775				-.7219	-.4187			
.792		-.3100						
.808			-.5551					
.834	-.2696							
.839		-.3912						
.850				-.3238	-.2930	-.2732		
.857			-.3150					
.862								-.3544
.865	-.4219							
.879		-.2895						
.900	-.2820			-.1956			-.1670	
.905			-.1988					
.919		-.2004						

AMES 11-073(OA148) -140A/B/C/R ORB LEFT WING BOT (XE8L68)

ALPHA (I) = -3.902 BETA (4) = 4.271

SECTION (I)LEFT WING BOT SURF DEPENDENT VARIABLE CP

2Y/BW	.2990	.3640	.4270	.5340	.6730	.7800	.8870	.9720
X/CW								
950				-.0824	-.1805	-.0776		
.953			-.0904					
.955		-.1124						
.965	-.2076							
1.000			-.0107		-.0013		-.0026	

ALPHA (I) = -3.917 BETA (5) = 8.333 MACH = .59482 Q = 591.26 P = 2387.4 RN/L = 4.8005

SECTION (I)LEFT WING BOT SURF DEPENDENT VARIABLE CP

2Y/BW	.2990	.3640	.4270	.5340	.6730	.7800	.8870	.9720
X/CW								
.010	-.0192	.0080	-.1531	-1.1015	-1.3693	-1.7896	-1.7308	
.020	.0000	.0040	-.2076	-.9045	-1.0361	-1.1999	-1.5241	-.5798
.040		.0191	-.2790					
.050	-.0301			-.5333	-.6455	-.7732	-.8052	
.069								-.4309
.080				-.4226				
.081			-.2657					
.086		.0146						
.094	-.0308							
.150				-.2909	-.3366	-.3706	-.3972	
.157								-.2425
.163		-.0599						
.177			-.2162					
.229	-.0206							
.246		-.1746						
.250				-.2228	-.2720	-.2935	-.2995	
.274			-.1891					
.345								-.2511
.390		-.1628						
.400				-.1913	-.2077		-.2316	
.402			-.1645					
.503								-.2683
.550				-.2288	-.2463			
.565			-.2000					
.600							-.2845	
.637		-.2115						
.650						-.2897		
.670								-.3428
.700					-.3029			
.725				-.2843				
.750						-.5005	-.4447	
.760			-.2804					

AMES 11-073(OA148) -148A/B/C/R ORB LEFT WING BOT (XEBL66)

ALPHA (1) = -3.917 BETA (5) = 8.333

SECTION (1)LEFT WING BOT SURF DEPENDENT VARIABLE CP

2Y/BW	.2990	.3640	.4270	.5340	.6730	.7800	.8870	.9720
X/CW								
.775				-.7114	-.3996			
.798		-.3011						
.808			-.5208					
.834	-.2684							
.839		-.3972						
.850				-.3098	-.2595	-.2703		
.857			-.3102					
.862								-.2589
.865	-.4300							
.879		-.2966						
.900	-.2867			-.1771			-.1391	
.905			-.1950					
.919		-.2153						
.950				-.0639	-.1216	-.0633		
.953			-.0858					
.955		-.1212						
.965	-.2402							
1.000			.0056		.0200		-.0036	

ALPHA (2) = .066 BETA (1) = -7.886 MACH = .59550 Q = 592.43 P = 2386.4 RN/L = 4.8075

SECTION (1)LEFT WING BOT SURF DEPENDENT VARIABLE CP

2Y/BW	.2990	.3640	.4270	.5340	.6730	.7800	.8870	.9720
X/CW								
.010	-.0124	-.0533	-.1869	-.9870	-1.0243	-1.0441	-.9012	
.020	.0000	-.0845	-.3174	-.8955	-.7988	-.8993	-.9322	-.3150
.040		-.0822	-.3988					
.050	-.0506			-.5393	-.5425	-.5891	-.5811	
.069								-.2732
.080				-.4154				
.081			-.3138					
.36		-.0488						
.094	-.0619							
.150				-.2541	-.2687	-.2702	-.2827	
.157								-.2102
.163		-.1356						
.177			-.2192					
.229	-.0557							
.246		-.2090						
.250				-.1805	-.2156	-.2271	-.2321	
.274			-.1645					
.345								-.2227
.390		-.1484						

AMES 11-073(OA148) -140A/B/C/R ORB LEFT WING BOT (XE8L66)

ALPHA (2) = .066 BETA (1) = -7.886

SECTION (1)LEFT WING BOT SURF DEPENDENT VARIABLE CP

2Y/BW	.2990	.3640	.4270	.5340	.6730	.7800	.8870	.9720
X/CW								
.400				-.1524	-.1620		-.1983	
.402			-.1221					
.503								-.2799
.550				-.2050	-.2238			
.565			-.2392					
.600							-.2834	
.637		-.1976						
.650						-.2828		
.670								-.3562
.700					-.2979			
.725				-.2689				
.750						-.5365	-.4724	
.760			-.2552					
.775				-.6716	-.4110			
.798		-.2892						
.809			-.5876					
.834	-.2442							
.839		-.3859						
.850				-.3378	-.3307	-.2697		
.857			-.2971					
.862								-.2165
.865	-.4008							
.879		-.2663						
.900	-.2000			-.2086			-.1573	
.905			-.1764					
.919		-.1540						
.950				-.0756	-.2692	-.0605		
.953			-.0657					
.955		-.0040						
.965	-.0578							
1.000			.0239		-.0509		.0238	

ALPHA (2) = .075 BETA (2) = -3.862 MACH = .59550 Q = 592.43 P = 2386.4 RN/L = 4.8075

SECTION (1)LEFT WING BOT SURF DEPENDENT VARIABLE CP

2Y/BW	.2990	.3640	.4270	.5340	.6730	.7800	.8870	.9720
X/CW								
.010	.0142	.0237	-.0520	-.7754	-.8778	-.8873	-.7612	
.020	.0000	-.0012	-.1610	-.7330	-.6745	-.7602	-.8208	-.2642
.040		.0078	-.2712					
.050	-.0176			-.4428	-.4646	-.5164	-.5277	
.069								-.2327
.080				-.3491				

AMES 11-073(OA148) -140A/B/C/R ORB LEFT WING BOT (XE8L66)

ALPHA (2) = .075 BETA (2) = -3.862

SECTION (1)LEFT WING BOT SURF DEPENDENT VARIABLE CP

2Y/BW	.2990	.3640	.4270	.5340	.6730	.7800	.8870	.9720
X/CW								
.081			-.2450					
.086		.0144						
.094	-.0315							
.150				-.2207	-.2483	-.2446	-.2696	
.157								-.1926
.163		-.0738						
.177			-.1855					
.229	-.0258							
.246		-.1615						
.250				-.1655	-.1984	-.2092	-.2184	
.274			-.1465					
.345								-.2067
.390		-.1242						
.400				-.1500	-.1588		-.1905	
.402			-.1170					
.503								-.2616
.550				-.2016	-.2144			
.565			-.2258					
.600							-.2777	
.637		-.1923						
.650						-.2815		
.670								-.3251
.700					-.2954			
.725				-.2704				
.750						-.5320	-.4690	
.760			-.2569					
.775				-.6993	-.4150			
.798		-.2900						
.808			-.5934					
.834	-.2503							
.839		-.3976						
.850				-.3339	-.3170	-.2720		
.857			-.3017					
.862								-.1848
.865	-.4111							
.879		-.2726						
.900	-.2365			-.2061			-.1433	
.905			-.1836					
.919		-.1807						
.950				-.0751	-.2655	-.0688		
.953			-.0706					
.955		-.0810						
.965	-.0923							
1.000			.0139		-.0112		.0248	

AMES 11-073(OA148) -140A/B/C/R ORB LEFT WING BOT (XE8L68)

ALPHA (2) = .076 BETA (3) = .175 MACH = .59560 Q = 592.43 P = 2386.4 RN/L = 4.8075

SECTION (1)LEFT WING BOT SURF DEPENDENT VARIABLE CP

2Y/BW	.2990	.3640	.4270	.5340	.6730	.7800	.8870	.9720
X/CW								
.010	.0112	.0637	.0666	-.5799	-.7116	-.7645	-.6934	
.020	.0000	.0529	-.0248	-.5819	-.5646	-.6373	-.7404	-.2429
.040		.0623	-.1600					
.050	-.0064			-.3616	-.3969	-.4548	-.4741	
.069								-.2191
.080				-.2932				
.081			-.1829					
.086		.0618						
.094	-.0151							
.150				-.1967	-.2174	-.2205	-.2576	
.157								-.1939
.163		-.0143						
.177			-.1526					
.229	-.0041							
.246		-.1274						
.250				-.1473	-.1835	-.2082	-.2120	
.274			-.1267					
.345								-.1914
.390		-.1040						
.400				-.1425	-.1483		-.1845	
.402			-.1076					
.503								-.2480
.550				-.1973	-.2136			
.565			-.1955					
.600							-.2761	
.637		-.1823						
.650						-.2787		
.670								-.3010
.700					-.2957			
.725				-.2709				
.750						-.5206	-.4587	
.760			-.2662					
.775				-.7202	-.4117			
.798		-.2966						
.808			-.5807					
.834	-.2528							
.839		-.3993						
.850				-.3319	-.3011	-.2764		
.857			-.3088					
.862								-.1455
.865	-.4179							
.879		-.2855						
.900	-.2630			-.2070			-.1310	
.905			-.1964					
.919		-.1960						

AMES 11-073(OA148) -140A/B/C/R ORB LEFT WING BOT (XEBL66)

ALPHA (2) = .076 BETA (3) = .175

SECTION (1)LEFT WING BOT SURF DEPENDENT VARIABLE CP

2Y/BW	.2990	.3640	.4270	.5340	.6730	.7800	.8870	.9720
X/CW								
.950				-.0762	-.2167	-.0676		
.953			-.0786					
.955		-.1051						
.965	-.1436							
1.000			.0128		.0120		.0252	

ALPHA (2) = .073 BETA (4) = 4.250 MACH = .59550 Q = 592.43 P = 2386.4 RN/L = 4.8075

SECTION (1)LEFT WING BOT SURF DEPENDENT VARIABLE CP

2Y/BW	.2990	.3640	.4270	.5340	.6730	.7800	.8870	.9720
X/CW								
.010	-.0278	.0499	.1415	-.4058	-.5312	-.5465	-.5035	
.020	.0000	.0563	.0730	-.4159	-.4280	-.4947	-.5539	-.1953
.040		.0726	-.0655					
.050	-.0161			-.2760	-.3140	-.3694	-.3908	
.069								-.1826
.080				-.2379				
.081			-.1190					
.086		.0807						
.094	-.0151							
.150				-.1642	-.1838	-.1914	-.2284	
.157								-.1929
.163		.0231						
.177			-.1187					
.229	.0077							
.246		-.1016						
.250				-.1300	-.1668	-.1828	-.1986	
.274			-.1058					
.345								-.1796
.390		-.0976						
.400				-.1297	-.1436		-.1776	
.402			-.1030					
.503								-.2345
.550				-.1908	-.2075			
.565			-.2094					
.600							-.2639	
.637		-.1834						
.650						-.2698		
.670								-.2698
.700					-.2866			
.725				-.2733				
.750						-.5175	-.4471	
.760			-.2649					

AMES 11-073(OA148) -140A/B/C/R ORB LEFT WING BOT (XEBL66)

ALPHA (2) = .073 BETA (4) = 4.250

SECTION (1)LEFT WING BOT SURF DEPENDENT VARIABLE CP

2Y/BW	.2990	.3640	.4270	.5340	.6730	.7800	.8870	.9720
X/CW								
.775				-.7267	-.4087			
.798		-.2952						
.808			-.5552					
.834	-.2541							
.839		-.3864						
.850				-.3249	-.2813	-.2829		
.857			-.3115					
.862								-.1191
.865	-.4064							
.879		-.2930						
.900	-.2669			-.1973			-.1252	
.905			-.2027					
.919		-.2049						
.950				-.0751	-.1606	-.0612		
.953			-.0903					
.955		-.1178						
.965	-.2093							
1.000			.0120		.0240		.0289	

ALPHA (2) = .069 BETA (5) = 8.308 MACH = .59550 Q = 592.43 P = 2386.4 RN/L = 4.8075

SECTION (1)LEFT WING BOT SURF DEPENDENT VARIABLE CP

2Y/BW	.2990	.3640	.4270	.5340	.6730	.7800	.8870	.9720
X/CW								
.010	-.1100	-.0219	.1856	-.2079	-.3477	-.3954	-.3691	
.020	.0000	.0144	.1431	-.2524	-.3009	-.3695	-.4321	-.1753
.040		.0412	.0192					
.050	-.0398			-.1758	-.2355	-.2863	-.3288	
.069								-.2034
.080				-.1674				
.081			-.0650					
.086		.0829						
.094	-.0331							
.150				-.1314	-.1493	-.1675	-.2112	
.157								-.1799
.163		.0545						
.177			-.0875					
.229	.0005							
.246		-.0759						
.250				-.1151	-.1488	-.1642	-.1882	
.274			-.0932					
.345								
.390		-.0828						-.1711

AMES 11-073(OA148) -140A/B/C/R ORB LEFT WING BOT (XE8L6S)

ALPHA (2) = .069 BETA (5) = 8.308

SECTION (1)LEFT WING BOT SURF DEPENDENT VARIABLE CP

2Y/BW	.2990	.3640	.4270	.5340	.6730	.7800	.8870	.9720
X/CW								
.400				-.1227	-.1353		-.1718	
.402			-.0922					
.503								-.2108
.550				-.1831	-.1975			
.565			-.2519					
.600							-.2543	
.637		-.1748						
.650						-.2612		
.670								-.2389
.700					-.2783			
.725				-.2706				
.750						-.4957	-.4295	
.760			-.2667					
.775				-.7193	-.3896			
.798		-.2892						
.808			-.5219					
.834	-.2582							
.839		-.3900						
.850				-.3102	-.2480	-.2733		
.857			-.3133					
.862								-.0859
.865	-.4216							
.879		-.2967						
.900	-.2806			-.1829			-.1102	
.905			-.2054					
.919		-.2177						
.950				-.0648	-.1101	-.0525		
.953			-.0941					
.955		-.1229						
.965	-.2508							
1.000			.0118		.0357		.0427	

ALPHA (3) = 4.021 BETA (1) = -7.899 MACH = .59494 Q = 591.36 P = 2386.7 RN/L = 4.8048

SECTION (1)LEFT WING BOT SURF DEPENDENT VARIABLE CP

2Y/BW	.2990	.3640	.4270	.5340	.6730	.7800	.8870	.9720
X/CW								
.010	.0820	.1455	.3095	-.0577	-.0387	.0852	.1185	
.020	.0000	.1450	.2124	-.1570	-.0605	-.0578	-.0305	.0072
.040		.1543	.0242					
.050	.0582			-.1257	-.1027	-.0835	-.0653	
.069								-.0307
.080				-.1068				

AMES 11-073(OA148) -140A/B/C/R ORB LEFT WING BOT (XEBL66)

ALPHA (3) = 4.021 BETA (1) = -7.899

SECTION (1)LEFT WING BOT SURF DEPENDENT VARIABLE CP

2Y/BW	.2990	.3640	.4270	.5340	.6730	.7800	.8870	.9720
X/CW								
.081			-.0385					
.086		.1517						
.094	.0483							
.150				-.0572	-.0496	-.0407	-.0617	
.157								-.1253
.163		.0746						
.177			-.0409					
.229	.0478							
.246		-.0391						
.250				-.0338	-.0600	-.0682	-.0798	
.274			-.0316					
.345								-.1030
.390		-.0285						
.400				-.0603	-.0668		-.1024	
.402			-.0299					
.503								-.2030
.550				-.1372	-.1539			
.565			-.2735					
.600							-.2432	
.637		-.1375						
.650						-.2434		
.670								-.2822
.700					-.2699			
.725				-.2381				
.750						-.5456	-.4574	
.760			-.2306					
.775				-.6808	-.3990			
.798		-.2659						
.809			-.5755					
.834	-.2257							
.839		-.3671						
.850				-.3285	-.3142	-.2869		
.857			-.2797					
.862								-.1752
.865	-.3833							
.879		-.2504						
.900	-.1893			-.2068			-.1753	
.905			-.1695					
.919		-.1548						
.950				-.0674	-.2503	-.0711		
.953			-.0478					
.955		-.0581						
.965	-.0560							
1.000			.0504		.0113		.0513	

DATE 10 FEB 76 TABULATED PRESSURE DATA - OA148 (AMES 11-073-1) #E 2750

AMES 11-073(OA148) -140A/B/C/R ORB LEFT WING BOT (XEBL66)

ALPHA (3) = 4.024 BETA (2) = -3.864 MACH = .59494 Q = 591.36 P = 2386.7 RN/L = 4.6049

SECTION (1)LEFT WING BOT SURF DEPENDENT VARIABLE CP

2Y/BW	.2990	.3640	.4270	.5340	.6730	.7800	.8870	.9720
X/CW								
.010	.0192	.0742	.3263	.0570	.0304	.1311	.1723	
.020	.0000	.1172	.2595	-.0572	-.0005	-.0064	.0160	-.0573
.040		.1385	.0875					
.050	.0426			-.0556	-.0585	-.0462	-.0351	
.069								-.0801
.080				-.0588				
.081			.0061					
.086		.1606						
.094	.0403							
.150				-.0319	-.0350	-.0249	-.0637	
.157								-.1344
.163		.1122						
.177			-.0199					
.229	.0570							
.246		-.0168						
.250				-.0296	-.0539	-.0640	-.0830	
.274			-.0232					
.345								-.1327
.390		-.0168						
.400				-.0587	-.0636		-.1092	
.402			-.0292					
.503								-.2173
.550				-.1400	-.1572			
.565			-.2496					
.600							-.2467	
.637		-.1378						
.650						-.2486		
.670								-.2860
.700					-.2720			
.725				-.2443				
.750						-.5369	-.4708	
.760			-.2363					
.775				-.7062	-.4024			
.798		-.2699						
.808			-.5810					
.834	-.2281							
.839		-.3816						
.850				-.3305	-.3053	-.2965		
.857			-.2985					
.852								-.1638
.865	-.3979							
.879		-.2661						
.900	-.2250			-.2107			-.1660	
.905			-.1869					
.919		-.1774						

AMES 11-073(OA148) -140A/B/C/R ORB LEFT WING BOT (XEBL66)

ALPHA (3) = 4.024 BETA (2) = -3.864

SECTION (1)LEFT WING BOT SURF DEPENDENT VARIABLE CP

2Y/BW	.2990	.3640	.4270	.5340	.6730	.7800	.8870	.9720
X/CW								
.950				-.0696	-.2415	-.0702		
.953			-.0640					
.955		-.0823						
.965	-.0974							
1.000			.0293		.0415		.0548	

ALPHA (3) = 4.022 BETA (3) = .186 MACH = .59494 Q = 591.36 P = 2386.7 RN/L = 4.8049

SECTION (1)LEFT WING BOT SURF DEPENDENT VARIABLE CP

2Y/BW	.2990	.3640	.4270	.5340	.6730	.7800	.8870	.9720
X/CW								
.010	-.0753	-.0429	.2996	.1303	.0783	.1613	.1692	
.020	.0000	.0484	.2762	.0098	.0322	.0227	.0260	-.1215
.040		.0846	.1302					
.050	.0039			-.0084	-.0315	-.0299	-.0394	
.069								-.1331
.080				-.0293				
.081			.0365					
.086		.1507						
.094	.0158							
.150				-.0195	-.0328	-.0259	-.0733	
.157								-.1547
.163		.1270						
.177			.0012					
.229	.0479							
.246		.0010						
.250				-.0253	-.0493	-.0637	-.0685	
.274			-.0177					
.345								-.1587
.390		-.0099						
.400				-.0604	-.0696		-.1212	
.402			-.0296					
.503								-.2278
.550				-.1413	-.1559			
.565			-.2391					
.600							-.2513	
.637		-.1341						
.650						-.2481		
.670								-.2850
.700					-.2687			
.705				-.2435				
.750						-.5319	-.4645	
.760			-.2479					

AMES 11-073(OA148) -140A/B/C/R ORB LEFT WING BOT (XEBL66)

ALPHA (3) = 4.022 BETA (3) = .186

SECTION (1)LEFT WING BOT SURF DEPENDENT VARIABLE CP

2Y/BW	.2990	.3640	.4270	.5340	.6730	.7800	.8870	.9720
X/CW								
.775				-.7286	-.3996			
.798		-.2757						
.808			-.5640					
.834	-.2329							
.839		-.3844						
.850				-.3254	-.2890	-.3011		
.857			-.3116					
.862								-.1453
.865	-.4051							
.879		-.2797						
.900	-.2440			-.2032			-.1611	
.905			-.1966					
.919		-.1924						
.950				-.0711	-.1859	-.0647		
.953			-.0773					
.955		-.1022						
.965	-.1577							
1.000			.0300		.0500		.0563	

ALPHA (3) = 4.025 BETA (4) = 4.244 MACH = .59494 Q = 591.36 P = 2386.7 RN/L = 4.8849

SECTION (1)LEFT WING BOT SURF DEPENDENT VARIABLE CP

2Y/BW	.2990	.3640	.4270	.5340	.6730	.7800	.8870	.9728
X/CW								
.010	-.2110	-.2090	.2334	.1850	.1358	.2096	.1963	
.020	.0000	-.0618	.2551	.0849	.0882	.0925	.0889	-.2409
.040		-.0039	.1614					
.050	-.0515			.0344	.0092	.0105	.0016	
.069								-.2185
.080				.0053				
.081			.0650					
.086		.1181						
.094	-.0178							
.150				-.0063	-.0089	-.0163	-.0655	
.157								-.1967
.163		.1383						
.177			.0145					
.229	.0272							
.246		.0100						
.250				-.0191	-.0390	-.0554	-.0874	
.274			-.0087					
.345								-.1942
.390		-.0044						

AMES 11-073(OA148) -140A/B/C/R ORB LEFT WING BOT (XEBL66)

ALPHA (3) = 4.025 BETA (4) = 4.244

SECTION (1)LEFT WING BOT SURF DEPENDENT VARIABLE CP

2Y/BW	.2990	.3640	.4270	.5340	.6730	.7800	.8870	.9720
X/CW								
.400				-.0614	-.0655		-.1197	
.402			-.0325					
.503								-.2423
.550				-.1400	-.1551			
.565			-.2400					
.600							-.2539	
.637		-.1284						
.650						-.2463		
.670								-.2927
.700					-.2611			
.725				-.2428				
.750						-.5188	-.4685	
.760			-.2498					
.775				-.7150	-.3815			
.798		-.2707						
.808			-.5326					
.834	-.2361							
.839		-.3728						
.850				-.3164	-.2677	-.3079		
.857			-.3070					
.862								-.1377
.865	-.4047							
.879		-.2847						
.900	-.2632			-.1910			-.1582	
.905			-.2047					
.919		-.2080						
.950				-.0854	-.1374	-.0731		
.953			-.0871					
.955		-.1181						
.965	-.2266							
1.000			.0285		.0488		.0409	

ALPHA (3) = 4.031 BETA (5) = 8.294 MACH = .59494 Q = 591.36 P = 2386.7 RN/L = 4.8049

SECTION (1)LEFT WING BOT SURF DEPENDENT VARIABLE CP

2Y/BW	.2990	.3640	.4270	.5340	.6730	.7800	.8870	.9720
X/CW								
.010	-.3757	-.3394	.1080	.2268	.1708	.2098	.1820	
.020	.0000	-.1795	.1912	.1422	.1235	.1220	.0929	-.3715
.040		-.1193	.1664					
.050	-.1304			.0750	.0548	.0290	.0119	
.069								-.3208
.080				.0351				

AMES 11-073(OA148) -140A/B/C/R ORB LEFT WING BOT (XEBL66)

ALPHA (3) = 4.031 BETA (5) = 8.294

SECTION (1)LEFT WING BOT SURF DEPENDENT VARIABLE CP

2Y/BW	.2990	.3640	.4270	.5340	.6730	.7800	.8870	.9720
X/CW								
.081			.0882					
.086		.0599						
.094	-.0701							
.150				.0029	.0104	-.0111	-.0657	
.157								-.2354
.163		.1310						
.177			.0362					
.229	.0018							
.246		.0168						
.250				-.0120	-.0340	-.0491	-.0967	
.274			.0019					
.345								-.2270
.390		.0025						
.400				-.0585	-.0699		-.1331	
.402			-.0241					
.503								-.2704
.550				-.1277	-.1510			
.595			-.2928					
.600							-.2435	
.637		-.1254						
.650						-.2453		
.670								-.2868
.700					-.2590			
.725				-.2377				
.750						-.4953	-.4634	
.760			-.2523					
.775				-.6957	-.3668			
.799		-.2644						
.808			-.5031					
.834	-.2358							
.839		-.3696						
.850				-.3017	-.2330	-.2951		
.857			-.3050					
.862								-.1260
.865	-.4066							
.879		-.2894						
.900	-.2710			-.1890			-.1502	
.905			-.2048					
.919		-.2177						
.950				-.0700	-.1115	-.0718		
.953			-.0856					
.955		-.1254						
.965	-.2548							
1.000			.0184		.0452		.0387	

DATE 10 FEB 76 TABULATED PRESSURE DATA - OA148 (AMES 11-073-1) PAGE 2755

AMES 11-073(OA148) -140A/B/C/R ORB LEFT WING BOT (XE8L66)

ALPHA (4) = 7.869 BETA (1) = -7.888 MACH = .59424 Q = 590.06 P = 2387.2 RN/L = 4.7971

SECTION (1)LEFT WING BOT SURF DEPENDENT VARIABLE CP

2Y/BW	.2390	.3640	.4270	.5340	.6730	.7800	.8870	.9720
X/CW								
.010	-.0182	-.0425	.4106	.4540	.4613	.5375	.5280	
.020	.0000	.1122	.4282	.3075	.3799	.3978	.4129	-.1644
.040		.1682	.3819					
.050	.0985			.2034	.2433	.2610	.2710	
.069								-.0872
.080				.1587				
.091			.1864					
.095		.2531						
.094	.1046							
.150				.1273	.1408	.1602	.1158	
.157								-.1273
.163		.2393						
.177			.1205					
.229	.1301							
.246		.1039						
.250				.0984	.0879	.0832	.0569	
.274			.0931					
.345								-.0924
.390		.0776						
.400				.0341	.0348		-.0154	
.402			.0601					
.503								-.1964
.550				-.0669	-.0783			
.565			-.2982					
.600								
.637		-.0738					-.1951	
.650								
.670						-.1925		
.700								-.2833
.725					-.2146			
.750				-.1931				
.760						-.4905	-.4128	
.775			-.1948					
.798				-.6504	-.3551			
.808		-.2304						
.834	-.1996		-.5422					
.839		-.3464						
.850				-.3040	-.2795	-.2774		
.857			-.2576					
.862								
.865	-.3502							-.2128
.879		-.2352						
.900	-.1563			-.1885				
.905			-.1660				-.1946	
.919		-.1456						

AMES 11-073(OA148) -140A/B/C/R ORB LEFT WING BOT (XE8L66)

ALPHA (4) = 7.869 BETA (1) = -7.888

SECTION (1)LEFT WING BOT SURF DEPENDENT VARIABLE CP

2Y/BW	.2990	.3640	.4270	.5340	.6730	.7800	.8870	.9720
X/CW								
.950				-.0575	-.2205	-.0692		
.953			-.0495					
.955		-.0540						
.965	-.0552							
1.000			.0613		.0520		.0243	

ALPHA (4) = 7.986 BETA (2) = -3.859 MACH = .59424 Q = 590.06 P = 2387.2 RN/L = 4.7971

SECTION (1)LEFT WING BOT SURF DEPENDENT VARIABLE CP

2Y/BW	.2990	.3640	.4270	.5340	.6730	.7800	.8870	.9720
X/CW								
.010	-.1640	-.2794	.2957	.4529	.4440	.4386	.4650	
.020	.0000	-.0239	.3795	.3361	.3789	.3992	.3930	-.3498
.040		.0523	.3129					
.050	.0335			.2309	.2513	.2668	.2628	
.069								-.2318
.080				.1748				
.081			.2028					
.086		.2125						
.094	.0610							
.150				.1292	.1556	.1542	.1023	
.157								-.1797
.163		.2443						
.177			.1290					
.229	.1103							
.246		.1211						
.250				.1019	.0892	.0797	.0373	
.274			.0961					
.345								-.1495
.390		.0860						
.400				.0393	.0285		-.0379	
.402			.0588					
.503								-.2396
.550				-.0632	-.0855			
.555			-.2709					
.600							-.2151	
.637		-.0692						
.650						-.2009		
.670								-.3002
.700					-.2214			
.725				-.1975				
.750						-.4905	-.4318	
.760			-.2060					

AMES 11-073(OA148) -140A/B/C/R ORB LEFT WING BOT (XEBL66)

ALPHA (4) = 7.986 BETA (2) = -3.859

SECTION (1)LEFT WING BOT SURF DEPENDENT VARIABLE CP

2Y/BW	.2990	.3640	.4270	.5340	.6730	.7800	.8870	.9720
X/CW								
.775				-.6780	-.3519			
.798		-.2347						
.808			-.5364					
.834	-.2024							
.839		-.3492						
.850				-.3060	-.2746	-.2963		
.857			-.2814					
.862								-.2227
.865	-.3630							
.879		-.2480						
.900	-.1909			-.1980			-.2037	
.905			-.1795					
.919		-.1684						
.950				-.0675	-.2025	-.0765		
.953			-.0637					
.955		-.0776						
.965	-.1070							
1.000			.0481		.0696		.0121	

ALPHA (4) = 7.991 BETA (3) = .178 MACH = .59424 Q = 590.06 P = 2387.2 RN/L = 4.7971

SECTION (1)LEFT WING BOT SURF DEPENDENT VARIABLE CP

2Y/BW	.2990	.3640	.4270	.5340	.6730	.7800	.8870	.9720
X/CW								
.010	-.3547	-.5191	.1436	.4334	.4180	.4349	.3936	
.020	.0000	-.1870	.2891	.3456	.3673	.3706	.3532	-.5351
.040		-.0969	.2980					
.050	-.0669			.2465	.2519	.2534	.2447	
.069								-.3685
.080				.1865				
.081			.2090					
.086		.1507						
.094	.0059							
.150				.1315	.1494	.1428	.0745	
.157								-.2230
.163		.2378						
.177			.1400					
.229	.0861							
.246		.1223						
.250				.0971	.0807	.0701	.0135	
.274			.1032					
.345								-.2090
.390		.0902						

AMES 11-073(OA148) -140A/B/C/R ORB LEFT WING BOT (XE8L66)

ALPHA (4) = 7.991 BETA (3) = .178

SECTION (1)LEFT WING BOT SURF DEPENDENT VARIABLE CP

2Y/BW	.2990	.3640	.4270	.5340	.6730	.7800	.8870	.9720
X/CW								
.400				.0352	.0201		-.0507	
.402			.0570					
.503								-.2901
.550				-.0586	-.0869			
.565			-.2516					
.600							-.2230	
.637		-.0632						
.650						-.2052		
.670								-.3304
.700					-.2200			
.725				-.2042				
.750						-.4973	-.4479	
.760			-.2118					
.775				-.6863	-.3436			
.798		-.2383						
.808			-.5141					
.834	-.2042							
.839		-.3471						
.850				-.3011	-.2712	-.3081		
.857			-.2874					
.862								-.2325
.865	-.3695							
.879		-.2573						
.900	-.2149			-.1956			-.1997	
.905			-.1943					
.919		-.1860						
.950				-.0741	-.1599	-.0844		
.953			-.0800					
.955		-.0971						
.965	-.1737							
1.000			.0402		.0613		.0123	

ALPHA (4) = 7.992 BETA (4) = 4.237 MACH = .59424 Q = 590.06 P = 2387.2 RN/L = 4.7971

SECTION (1)LEFT WING BOT SURF DEPENDENT VARIABLE CP

2Y/BW	.2990	.3640	.4270	.5340	.6730	.7800	.8870	.9720
X/CW								
.010	-.5455	-.6697	-.0419	.3787	.3638	.3456	.2914	
.020	.0000	-.3350	.1674	.3267	.3380	.3379	.3021	-.7892
.040		-.2277	.2507					
.050	-.1490			.2373	.2568	.2442	.2210	
.069								-.5392
.080				.1867				

AMES 11-073(OA148) -140A/B/C/R ORB LEFT WING BOT (XE8L66)

ALPHA (4) = 7.992 BETA (4) = 4.237

SECTION (1)LEFT WING BOT SURF DEPENDENT VARIABLE CP

2Y/BW	.2990	.3640	.4270	.5340	.6730	.7800	.8870	.9720
X/CW								
.081			.1927					
.086		.0698						
.094	-.0622							
.150				.1224	.1389	.1423	.0584	
.157								-.2926
.163		.2079						
.177			.1311					
.229	.0410							
.246		.1089						
.250				.0870	.0760	.0616	-.0011	
.274			.0891					
.345								-.2868
.390		.0836						
.400				.0232	.0159		-.0726	
.402			.0524					
.503								-.3354
.550				-.0755	-.0910			
.565			-.2761					
.600							-.2299	
.637		-.0721						
.650						-.2104		
.670								-.3575
.700					-.2121			
.725				-.2061				
.750						-.4720	-.4559	
.760			-.2202					
.775				-.6602	-.2852			
.790		-.2445						
.800			-.4828					
.834	-.2121							
.839		-.3482						
.850				-.2916	-.2533	-.3049		
.857			-.2870					
.862								-.2376
.865	-.3779							
.879		-.2663						
.900	-.2378			-.1931			-.1964	
.905			-.1994					
.919		-.1995						
.950				-.0720	-.1563	-.0936		
.953			-.0892					
.955		-.1187						
.955	-.2326							
1.000			.0378		.0142		.0081	

AMES 11-073(OA148) -140A/B/C/R ORB LEFT WING BOT (XEBL66)

ALPHA (4) = 7.989 BETA (5) = 8.293 MACH = .59424 Q = 590.06 P = 2387.2 RN/L = 4.7971

SECTION (1)LEFT WING BOT SURF DEPENDENT VARIABLE CP

2Y/BW	.2990	.3640	.4270	.5340	.6730	.7800	.8870	.9720
X/CW								
.010	-.7482	-.6771	-.2515	.2903	.2819	.2300	.1701	
.020	.0000	-.4191	.0101	.2851	.2856	.2764	.2226	-1.0446
.040		-.3215	.1862					
.050	-.2606			.2249	.2388	.2144	.1746	
.069								-.7139
.080				.1716				
.081			.1712					
.086		-.0099						
.094	-.1413							
.150				.1129	.1267	.1212	.0326	
.157								-.3648
.163		.1710						
.177			.1235					
.179	-.0006							
.246		.0873						
.250				.0696	.0641	.0498	-.0259	
.274			.0860					
.345								-.3533
.380		.0759						
.400				.0138	.0038		-.0954	
.402			.0390					
.503								-.3823
.550				-.0773	-.0949			
.565			-.2873					
.600							-.2334	
.637		-.0718						
.650						-.2114		
.670								-.3683
.700					-.2258			
.725				-.2126				
.750						-.4662	-.4505	
.760			-.2221					
.775				-.6755	-.3154			
.788		-.2416						
.809			-.4601					
.834	-.2183							
.839		-.3501						
.850				-.2897	-.2091	-.3025		
.857			-.2909					
.862								-.2266
.865	-.3947							
.879		-.2735						
.900	-.2523			-.1952			-.1851	
.905			-.2054					
.919		-.2065						

AMES 11-073(OA148) -140A/B/C/R ORB LEFT WING BOT (XEBL66)

ALPHA (4) = 7.989 BETA (5) = 8.293

SECTION (1)LEFT WING BOT SURF DEPENDENT VARIABLE CP

2Y/BW	.2990	.3640	.4270	.5340	.6730	.7800	.8870	.9720
X/CW								
.950				-.0849	-.1145	-.0866		
.953			-.0921					
.955		-.1230						
.965	-.2497							
1.000			.0399		.0211		.0246	

ALPHA (5) = 12.002 BETA (1) = -7.846 MACH = .59422 Q = 590.06 P = 2387.2 RN/L = 4.7978

SECTION (1)LEFT WING BOT SURF DEPENDENT VARIABLE CP

2Y/BW	.2990	.3640	.4270	.5340	.6730	.7800	.8870	.9720
X/CW								
.010	-.3038	-.6237	.1496	.5968	.6019	.5325	.4760	
.020	.0000	-.1521	.3868	.5574	.5863	.5906	.5380	-.6897
.040		-.0233	.4482					
.050	.0610			.4400	.4756	.4831	.4622	
.069								-.3526
.080				.3641				
.081			.3634					
.086		.2643						
.094	.1187							
.150				.2875	.3182	.3241	.2608	
.157								-.1904
.163		.3619						
.177			.2726					
.229	.1922							
.246		.2401						
.250				.2284	.2274	.2207	.1714	
.274			.2162					
.345								-.1040
.390		.1955						
.400				.1397	.1352		.0675	
.402			.1601					
.503								-.2132
.550				.0210	.0066			
.565			-.3177					
.600							-.1559	
.637		.0092						
.650						-.1277		
.670								-.2970
.700					-.1414			
.725				-.1337				
.750						-.4264	-.3662	
.760			-.1639					

AMES 11-073(OA148) -140A/B/C/R ORB LEFT WING BOT (XEBL66)

ALPHA (5) = 12.002 BETA (1) = -7.846

SECTION (1)LEFT WING BOT SURF DEPENDENT VARIABLE CP

2Y/BW	.2990	.3640	.4270	.5340	.6730	.7800	.8870	.9720
X/CW								
.775				-.5756	-.2293			
.798		-.1837						
.808			-.4689					
.834	-.1607							
.839		-.2989						
.850				-.2685	-.2473	-.2748		
.857			-.2410					
.862								-.2822
.865	-.3178							
.879		-.2039						
.900	-.1116			-.1850			-.2408	
.905			-.1605					
.919		-.1375						
.950				-.0792	-.1773	-.0971		
.953			-.0528					
.955		-.0536						
.965	-.0618							
1.000			.0 0		-.0074		-.0833	

ALPHA (5) = 12.020 BETA (2) = -3.839 MACH = .59422 Q = 590.06 P = 2387.2 RN/L = 4.7978

SECTION (1)LEFT WING BOT SURF DEPENDENT VARIABLE CP

2Y/BW	.2990	.3640	.4270	.5340	.6730	.7800	.8870	.9720
X/CW								
.010	-.5333	-.8496	-.0690	.5046	.5077	.4045	.3373	
.020	.0000	-.3238	.2497	.5115	.5290	.5122	.4467	-.9410
.040		-.1850	.3960					
.050	-.0513			.4965	.4613	.4461	.4172	
.069								-.5468
.080				.3481				
.081			.3420					
.086		.1863						
.094	.0489							
.150				.2743	.3016	.3071	.2241	
.157								-.2535
.163		.3358						
.177			.2621					
.229	.1527							
.246		.2300						
.250				.2180	.2129	.2010	.1363	
.274			.2071					
.345								-.1929
.390		.1875						

AMES 11-073(OA148) -140A/B/C/R ORB LEFT WING BOT (XE8L66)

ALPHA (5) = 12.020 BETA (2) = -3.839

SECTION (1)LEFT WING BOT SURF DEPENDENT VARIABLE CP

2Y/BW	.2990	.3640	.4270	.5340	.6730	.7800	.8870	.9720
X/CW								
.400				.1308	.1209		.0377	
.402			.1517					
.503								-.2929
.550				.0102	-.0063			
.565			-.2748					
.600							-.1771	
.637		.0049						
.650						-.1520		
.670								-.3406
.700					-.1668			
.725				-.1511				
.750						-.4430	-.3948	
.760			-.1689					
.775				-.6214	-.2567			
.798		-.1967						
.808			-.4570					
.834	-.1685							
.839		-.3034						
.850				-.2785	-.2479	-.2978		
.857			-.2550					
.862								-.2954
.865	-.3260							
.879		-.2180						
.900	-.1439			-.1909			-.2396	
.905			-.1804					
.919		-.1582						
.950				-.0736	-.1782	-.1129		
.953			-.0704					
.955		-.0822						
.965	-.1220							
1.000			.0407		-.0055		-.0692	

ALPHA (5) = 11.983 BETA (3) = .186 MACH = .59422 Q = 590.06 P = 2387.2 RN/L = 4.7978

SECTION (1)LEFT WING BOT SURF DEPENDENT VARIABLE CP

2Y/BW	.2990	.3640	.4270	.5340	.6730	.7800	.8870	.9720
X/CW								
.010	-.7671	-1.0833	-.3066	.3954	.3968	.2534	.1947	
.020	.0000	-.5094	.0767	.4460	.4576	.4241	.3453	-1.1407
.040		-.3539	.3238					
.050	-.1602			.3965	.4197	.3989	.3496	
.063								-.7146
.080				.3290				

AMES 11-073(OA148) -140A/B/C/R ORB LEFT WING BOT (XEBL68)

ALPHA (5) = 11.983 BETA (3) = .186

SECTION (1)LEFT WING BOT SURF DEPENDENT VARIABLE CP

2Y/BW	.2930	.3640	.4270	.5340	.6730	.7800	.8870	.9720
X/CW								
.081			.3116					
.085		.0844						
.094	-.0340							
.150				.2519	.2753	.2772	.1794	
.157								-.3158
.163		.2921						
.177			.2483					
.229	.1015							
.246		.2055						
.250				.1969	.1935	.1726	.1012	
.274			.1947					
.345								-.2713
.390		.1770						
.400				.1148	.1045		.0047	
.402			.1379					
.503								-.3438
.550				-.0028	-.0298			
.565			-.2748					
.600							-.2004	
.647		-.0032						
.650						-.1649		
.670								-.3688
.700					-.1898			
.725				-.1684				
.750						-.4567	-.4077	
.760			-.1943					
.775				-.6355	-.2908			
.799		-.2074						
.800			-.4471					
.814	-.1836							
.839		-.3109						
.850				-.2885	-.[illegible]281	-.3134		
.857			-.2784					
.852								-.2893
.855	-.3429							
.879		-.2394						
.900	-.1840			-.1993			-.2424	
.905			-.1993					
.919		-.1885						
.950				-.0866	-.1536	-.1251		
.953			-.0930					
.955		-.1053						
.965	-.1917							
1.000			.0337		-.0149		-.0336	

DATE 10 FEB 76 TABULATED PRESSURE DATA - OA148 (AMES 11-073-1)

AMES 11-073(OA148) -140A/B/C/R ORB LEFT WING BOT (XE8L65)

ALPHA (5) = 11.980 BETA (4) = 4.247 MACH = .59422 Q = 590.06 P = 2387.2 RN/L = 4.7978

SECTION (1)LEFT WING BOT SURF DEPENDENT VARIABLE CP

2Y/BW	.2990	.3640	.4270	.5340	.6730	.7800	.8870	.9720
X/CW								
.010	-.9898	-.9579	-.5122	.2634	.2724	.0818	.0202	
.020	.0000	-.5961	-.0931	.3619	.3630	.3277	.2325	-1.3632
.040		-.4518	.2324					
.050	-.2864			.3395	.3666	.3391	.2789	
.069								-.8684
.080				.2932				
.081			.2652					
.086		-.0101						
.094	-.1313							
.150				.2244	.2447	.2459	.1444	
.157								-.3539
.163		.2374						
.177			.2257					
.229	.0481							
.246		.1732						
.250				.1721	.1696	.1547	.0724	
.274			.1759					
.345								-.3155
.390		.1556						
.400				.0979	.0862		-.0191	
.402			.1216					
.503								-.3638
.550				-.0129	-.0362			
.565			-.2710					
.600							-.2061	
.637		-.0059						
.650						-.1854		
.670								-.3660
.700					-.2062			
.725				-.1841				
.750						-.4524	-.4232	
.760			-.2003					
.775				-.6489	-.2993			
.798		-.2111						
.809			-.4363					
.834	-.1834							
.839		-.3210						
.850				-.2870	-.2117	-.3196		
.857			-.2841					
.862								
.865	-.3509							-.2768
.879		-.2503						
.900	-.2121			-.2066				
.905			-.2073				-.2538	
.919		-.1971						

AMES 11-073(OA148) -140A/B/C/R ORB LEFT WING BOT (XE8L68)

ALPHA (5) = 11.990 BETA (4) = 4.247

SECTION (1)LEFT WING BOT SURF DEPENDENT VARIABLE CP

2Y/BW	.2990	.3640	.4270	.5340	.6730	.7800	.8870	.9720
X/CW								
.950				-.1094	-.1383	-.1523		
.953			-.1008					
.955		-.1153						
.965	-.2266							
1.000			.0450		-.0019		-.0610	

ALPHA (5) = 11.973 BETA (5) = 8.307 MACH = .59422 Q = 590.06 P = 2387.2 RN/L = 4.7978

SECTION (1)LEFT WING BOT SURF DEPENDENT VARIABLE CP

2Y/BW	.2990	.3640	.4270	.5340	.6730	.7800	.8870	.9720
X/CW								
.010	-1.2177	-.7236	-.7463	.0912	.1159	-.1374	-.1604	
.020	.0000	-.6431	-.2804	.2526	.2504	.1976	.1051	-1.4105
.040		-.5320	.1296					
.050	-.4308			.2857	.3053	.2687	.2099	
.069								-.9570
.080				.2526				
.081			.2112					
.086		-.0903						
.094	-.2339							
.150				.2037	.2179	.2136	.1044	
.157								-.3949
.163		.1767						
.177			.2031					
.229	-.0079							
.246		.1430						
.250				.1552	.1485	.1270	.0398	
.274			.1601					
.375								-.3484
.390		.1461						
.400				.0814	.0744		-.0431	
.402			.1090					
.503								-.3925
.550				-.0227	-.0476			
.565			-.3112					
.600							-.2223	
.637		-.0058						
.650						-.1968		
.670								-.3710
.700					-.2189			
.725				-.1882				
.750						-.4499	-.4177	
.760			-.2088					

AMES 11-073(OA148) -140A/B/C/R ORB LEFT WING BOT (XEBL66)

ALPHA (5) = 11.973 BETA (5) = 8.307

SECTION (1)LEFT WING BOT SURF DEPENDENT VARIABLE CP

2Y/BW	.2990	.3640	.4270	.5340	.6730	.7800	.8870	.9720
X/CW								
.775				-.6442	-.2876			
.798		-.2174						
.808			-.4113					
.834	-.1929							
.839		-.3225						
.850				-.2832	-.1966	-.3135		
.857			-.2828					
.862								-.2717
.865	-.3493							
.879		-.2545						
.900	-.2203			-.2133			-.2545	
.905			-.2045					
.913		-.1981						
.950				-.1244	-.1322	-.1540		
.953			-.0935					
.955		-.1175						
.965	-.2385							
1.000			.0479		-.0268		-.0738	

AMES 11-073(OA148) -140A/B/C/R ORB LEFT WING BOT (XEBL67) (05 AUG 75)

REFERENCE DATA

SREF = 2690.0000 SQ.FT. XMRP = 1076.6800 IN. XO
LREF = 474.8000 IN. YMRP = .0000 IN. YO
BREF = 935.0680 IN. ZMRP = 375.0000 IN. ZO
SCALE = .0300

PARAMETRIC DATA

RUDDER = .000 SPDBRK = 55.000
BDFLAP = 22.500 L-ELVN = -4.000
R-ELVN = -4.000 MACH = .900

ALPHA (1) = -3.954 BETA (1) = -3.849 MACH = .90057 Q = 600.66 P = 1058.0 RN/L = 3.6340

SECTION (1)LEFT WING BOT SURF DEPENDENT VARIABLE CP

2Y/BW	.2990	.3640	.4270	.5340	.6730	.7800	.8870	.9720
X/CW								
.010	-.1279	-.2977	-.4919	-1.0794	-1.2441	-1.0207	-1.0342	
.020	.0000	-.2542	-.5360	-1.2582	-1.3138	-1.3211	-1.3434	-1.3467
.040		-.2250	-.6658					
.050	-.1235			-1.1535	-1.3127	-1.3568	-1.3726	
.069								-1.2494
.080				-1.0638				
.081			-.4789					
.085		-.1119						
.094	-.1147							
.150				-.6161	-1.1383	-1.2111	-1.2386	
.157								-.6259
.163		-.1685						
.177			-.4699					
.233	-.0594							
.246		-.3140						
.250				-.3954	-.4615	-.9395	-1.1677	
.274			-.3711					
.345								-.6622
.390		-.3335						
.400				-.2635	-.2659		-.3874	
.402			-.2546					
.503								-.5756
.550				-.3055	-.2696			
.565			-.7619					
.600							-.1939	
.637		-.2906						
.650						-.2212		
.670								-.5580
.700					-.2222			
.725				-.2502				
.750						-.5267	-.6316	
.760			-.2105					
.775				-.6092	-.6051			
.798		-.2722						
.806			-.6802					
.834	-.3059							
.839		-.5842						
.850				-.3593	-.4695	-.3836		

AMES 11-073(OA148) OA/B/C/R ORB LEFT WING BOT (XEBL67)

ALPHA (1) = -3.954 BETA (1) = -3.849

SECTION (1)LEFT WING BOT SURF DEPENDENT VARIABLE CP

2Y/BW	.2990	.3640	.4270	.5340	.6730	.7800	.8870	.9720
X/CW								
.857			-.3645					
.862								-.6116
.865	-.5963							
.879		-.2992						
.900	-.2905			-.3220			-.2934	
.905			-.2854					
.919		-.1894						
.950				-.2828	-.3485	-.2632		
.953			-.2086					
.955		-.1406						
.965	-.1120							
1.000			-.1023		-.0932		-.0850	

ALPHA (1) = -3.952 BETA (2) = .192 M'C = .90057 Q = 600.66 P = 1058.0 RN/L = 3.6340

SECTION (1)LEFT WING BOT SURF DEPENDENT VARIABLE CP

2Y/BW	.2990	.3640	.4270	.5340	.6730	.7800	.8870	.9720
X/CW								
.010	-.0438	-.1170	-.3137	-1.0724	-1.2717	-1.0661	-1.0992	
.020	.0000	-.0919	-.3629	-1.2347	-1.3304	-1.3562	-1.3160	-.7279
.040		-.0740	-.4636					
.050	-.0574			-1.1113	-1.2702	-1.3038	-1.2633	
.069								-.6570
.080				-.6951				
.081			-.3879					
.086		-.0272						
.094	-.0547							
.150				-.5113	-.6774	-1.0472	-1.0907	
.157								-.3907
.163		-.0896						
.177			-.4054					
.229	-.0096							
.246		-.2494						
.250				-.3670	-.3917	-.5218	-.8162	
.274			-.3161					
.345								-.4717
.330		-.2876						
.400				-.2634	-.2817		-.5671	
.402			-.2482					
.503								-.4302
.550				-.3150	-.3398			
.565			-.7501					
.600							-.2774	

C-4

AMES 11-073(OA148) -140A/B/C/R ORB LEFT WING BOT (XE8L67)

ALPHA (1) = -3.952 BETA (2) = .192

SECTION (1)LEFT WING BOT SURF DEPENDENT VARIABLE CP

2Y/BW	.2990	.3640	.4270	.5340	.6730	.7800	.8870	.9720
X/CW								
.037		-.2907						
.650						-.2900		
.670								-.5033
.700					-.2366			
.725				-.3233				
.750						-.5733	-.5499	
.760			-.2761					
.775				-.6148	-.6693			
.798		-.3597						
.808			-.6194					
.834	.3551							
.839		-.5211						
.850				-.3410	-.4330	-.3885		
.857			-.3468					
.862								-.4181
.865	-.6523							
.879		-.2975						
.900	-.3187			-.2962			-.2961	
.905			-.2943					
.919		-.2089						
.950				-.2733	-.2552	-.2669		
.953			-.2274					
.955		-.1541						
.965	-.1512							
1.000			-.1272		-.0971		-.1419	

ALPHA (1) = -3.959 BETA (3) = 4.272 MACH = .90957 Q = 600.66 P = 1058.0 RN/L = 3.6340

SECTION (1)LEFT WING BOT SURF DEPENDENT VARIABLE CP

2Y/BW	.2990	.3640	.4270	.5340	.6730	.7800	.8870	.9720
X/CW								
.010	.0105	.0004	-.1536	-1.0308	-1.2831	-1.0919	-.9685	
.020	.0000	.0134	-.2079	-1.0937	-1.3001	-1.1588	-.9378	-.6298
.040		.0235	-.3057					
.050	-.0096			-.6871	-1.2344	-1.1304	-.8823	
.069								-.5986
.080				-.5361				
.091			-.3024					
.066		.0408						
.094	-.0134							
.150				-.4335	-.5036	-.9030	-.8106	
.157								-.3760
.163		-.0249						

AMES 11-073(OA148) -140A/B/C/R ORB LEFT WING BOT (XE8L67)

ALPHA (1) = -3.959 BETA (3) = 4.272

SECTION (1)LEFT WING BOT SURF DEPENDENT VARIABLE CP

2Y/BW	.2990	.3640	.4270	.5340	.6730	.7800	.8870	.9720
X/CW								
.177			-.3041					
.229	.0197							
.246		-.2020						
.250				-.3259	-.3512	-.5389	-.7103	
.274			-.2821					
.345								-.4438
.390		-.2419						
.400				-.2488	-.2597		-.5586	
.402			-.2198					
.503								-.3839
.550				-.3046	-.3605			
.565			-.7591					
.600							-.3325	
.637		-.2825						
.650						-.3689		
.670								-.4281
.700					-.3666			
.725				-.3903				
.750						-.5462	-.5674	
.760			-.3346					
.775				-.5889	-.5965			
.798		-.3755						
.809			-.6221					
.834	-.3711							
.839		-.4692						
.850				-.3496	-.3538	-.3781		
.857			-.3055					
.862								-.3408
.865	-.6374							
.879		-.2843						
.900	-.3061			-.3070			-.2891	
.905			-.2438					
.919		-.2061						
.950				-.2467	-.1937	-.2637		
.953			-.1779					
.955		-.1653						
.965	-.1856							
1.000			-.1139		-.1112		-.1159	

AMES 11-073(OA148) -140A/B/C/R ORB LEFT WING BOT (XE8L67)

ALPHA (2) = .049 BETA (1) = -3.871 MACH = .90130 Q = 601.04 P = 1056.9 RN/L = 3.6167

SECTION (1)LEFT WING BOT SURF DEPENDENT VARIABLE CP

2Y/BW	.2990	.3640	.4270	.5340	.6730	.7800	.8870	.9720
X/CW								
.010	.0366	.0852	.0967	-.6626	-.8342	-.7632	-.6409	
.020	.0000	.0686	-.0111	-.6260	-.7948	-.7879	-.9081	-.3415
.040		.0807	-.1763					
.050	.0061			-.5357	-.6222	-.7165	-.7844	
.069								-.3614
.080				-.3607				
.081			-.2059					
.085		.0925						
.094	-.0078							
.150				-.2172	-.2246	-.2642	-.2916	
.157								-.2410
.163		.0161						
.177			-.1856					
.229	.0260							
.246		-.1359						
.250				-.1539	-.2073	-.2399	-.2609	
.274			-.1314					
.345								-.2586
.390		-.1106						
.400				-.1333	-.1428		-.2008	
.402			-.0936					
.503								-.2099
.550				-.2028	-.2149			
.565			-.8499					
.600							-.2883	
.637		-.1941						
.650						-.3195		
.670								-.5625
.700					-.2730			
.725				-.2817				
.750						-.4776	-.7581	
.760			-.2042					
.775				-.5818	-.6172			
.798		-.2520						
.838			-.6665					
.834	-.2988							
.839		-.6141						
.850				-.3479	-.4631	-.3616		
.857			-.3425					
.862								-.2060
.865	-.6289							
.879		-.2885						
.900	-.2902			-.3245			-.2013	
.905			-.2863					
.919		-.1974						

AMES 11-073(OA148) -140A/B/C/R ORB LEFT WING BOT (XEBL67)

ALPHA (2) = .049 BETA (1) = -3.871

SECTION (1)LEFT WING BOT SURF DEPENDENT VARIABLE CP

2Y/BW	.2990	.3640	.4270	.5340	.6730	.7800	.8870	.9720
X/CW								
.950				-.2950	-.3626	-.2652		
.953			-.2390					
.955		-.1466						
.965	-.1161							
1.000			-.1108		-.1189		-.0918	

ALPHA (2) = .052 BETA (2) = .177 MACH = .90130 Q = 601.04 P = 1056.9 RN/L = 3.6167

SECTION (1)LEFT WING BOT SURF DEPENDENT VARIABLE CP

2Y/BW	.2990	.3640	.4270	.5340	.6730	.7800	.8870	.9720
X/CW								
.010	.0330	.1070	.1769	-.4681	-.6814	-.7161	-.6294	
.020	.0000	.1044	.1008	-.4754	-.5957	-.6478	-.8124	-.3470
.040		.1198	-.0653					
.050	.0196			-.3651	-.4821	-.5584	-.6841	
.069								-.3458
.080				-.2936				
.081			-.1310					
.086		.1290						
.094	.0084							
.150				-.1879	-.2093	-.2339	-.3340	
.157								-.2470
.163		.0719						
.177			-.1414					
.229	.0416							
.246		-.0909						
.250				-.1418	-.1948	-.2303	-.2650	
.274			-.1149					
.345								-.2644
.390		-.0860						
.400				-.1342	-.1536		-.2215	
.402			-.0938					
.503								-.2026
.550				-.2171	-.2280			
.565			-.8809					
.600							-.3486	
.637		-.1928						
.650						-.3505		
.670								-.5539
.700					-.3057			
.725				-.2940				
.750						-.4836	-.7283	
.760			-.2339					

AMES 11-073(OA148) -140A/B/C/R ORB LEFT WING BOT (XEBL67)

ALPHA (2) = .052 BETA (2) = .177

SECTION (1)LEFT WING BOT SURF DEPENDENT VARIABLE CP

2Y/BW	.2990	.3640	.4270	.5340	.6730	.7800	.8870	.9720
X/CW								
.775				-.5886	-.6302			
.798		-.2747						
.808			-.6690					
.834	-.2940							
.839		-.6200						
.850				-.3326	-.3969	-.3477		
.857			-.3215					
.862								-.1853
.865	-.6125							
.879		-.2958						
.900	-.3151			-.3163			-.2200	
.905			-.2789					
.919		-.2086						
.950				-.3044	-.2787	-.2582		
.953			-.2213					
.955		-.1487						
.955	-.1408							
1.000			-.1059		-.1088		-.1002	

ALPHA (2) = .052 BETA (3) = 4.253 MACH = .90130 Q = 601.04 P = 1056.9 RN/L = 3.6167

SECTION (1)LEFT WING BOT SURF DEPENDENT VARIABLE CP

2Y/BW	.2990	.3640	.4270	.5340	.6730	.7800	.8870	.9720
X/CW								
.010	-.0138	.0791	.2321	-.2995	-.5103	-.5764	-.5499	
.020	.0000	.1011	.1727	-.3519	-.4233	-.4960	-.6311	-.2929
.040		.1201	.0202					
.050	.0158			-.2507	-.3704	-.4162	-.4839	
.069								-.3335
.080				-.2154				
.081			-.0671					
.086		.1444						
.094	.0115							
.150				-.1558	-.1770	-.2031	-.3105	
.157								-.2543
.163		.1073						
.177			-.1022					
.229	.0508							
.246		-.0608						
.250				-.1287	-.1744	-.2097	-.2668	
.274			-.0991					
.345								-.3515
.390		-.0765						

AMES 11-073(OA148) -140A/B/C/R ORB LEFT WING BOT (XE8L67)

ALPHA (2) = .052 BETA (3) = 4.253

SECTION (1)LEFT WING BOT SURF DEPENDENT VARIABLE CP

2Y/BW	.2990	.3640	.4270	.5340	.6730	.7800	.88	.9720
X/CW								
.400				-.1344	-.1493		-.2212	
.402			-.0941					
.503								-.2738
.550				-.2165	-.2421			
.565			-.8897					
.600							-.3884	
.637		-.2010						
.650						-.3677		
.670								-.4875
.700					-.3162			
.725				-.3051				
.750						-.5033	-.6858	
.760			-.2615					
.775				-.6157	-.6235			
.798		-.2964						
.808			-.6665					
.834	-.3155							
.839		-.5528						
.850				-.3155	-.3662	-.3295		
.857			-.3062					
.862								-.1599
.865	-.6179							
.879		-.2943						
.900	-.3299			-.2978			-.2157	
.905			-.2690					
.919		-.1999						
.950				-.2684	-.2224	-.2625		
.953			-.2084					
.955		-.1386						
.965	-.1841							
1.000			-.1173		-.1059		-.1053	

ALPHA (3) = 4.019 BETA (1) = -3.877 MACH = .89987 Q = 599.87 P = 1058.3 RN/L = 3.6007

SECTION (1)LEFT WING BOT SURF DEPENDENT VARIABLE CP

2Y/BW	.2990	.3640	.4270	.5340	.6730	.7800	.8870	.9720
X/CW								
.010	.0113	.1192	.4011	.0982	.0321	.1133	.1343	
.020	.0000	.1639	.3380	-.0329	.0001	-.0041	-.0239	-.1031
.040		.1933	.1672					
[illegible]	.0566			-.0341	-.0577	-.0501	-.0677	
.059								-.1634
.080				-.0372				

AMES 11-073(OA148) -140A/B/C/R ORB LEFT WING BOT (XEBL67)

ALPHA (3) = 4.019 BETA (1) = -3.877

SECTION (1)LEFT WING BOT SURF DEPENDENT VARIABLE CP

2Y/BW	.2990	.3640	.4270	.5340	.6730	.7800	.8870	.9720
X/CW								
.081			.0606					
.086		.2274						
.094	.0580							
.150				.0022	-.0091	-.0162	-.0783	
.157								-.1849
.163		.1949						
.177			.0199					
.229	.0996							
.246		.0333						
.250				.0046	-.0285	-.0487	-.1060	
.274			.0190					
.345								-.2401
.390		.0231						
.400				-.0215	-.0309		-.1197	
.402			.0142					
.503								-.2903
.550				-.1225	-.1409			
.555			-.9249					
.600							-.3030	
.637		-.1179						
.650						-.2833		
.670								-.6106
.700					-.2672			
.725				-.1967				
.750						-.6366	-.7475	
.760			-.1546					
.775				-.6615	-.6383			
.796		-.1891						
.808			-.7056					
.834	-.2390							
839		-.6536						
.850				-.3363	-.5084	-.3968		
.857			-.3273					
.862								-.1713
.865	-.6093							
.879		-.2877						
.900	-.3133			-.3083			-.2003	
905			-.2679					
.919		-.1720						
.950				-.2744	- 2468	-.1662		
.953			-.2135					
.955		-.1195						
.965	-.1010							
1.000			-.1040		-.0615		-.0963	

DATE 10 FEB 76 TABULATED PRESSURE DATA - OA148 (AMES 11-073-1) PAGE 2777

AMES 11-073(OA148) -140A/B/C/R ORB LEFT WING BOT (XEBL67)

ALPHA (3) = 4.018 BETA (2) = .181 MACH = .89987 Q = 599.87 P = 1058.3 RN/L = 3.6007

SECTION (1)LEFT WING BOT SURF DEPENDENT VARIABLE CP

2Y/BW	.2990	.3640	.4270	.5340	.6730	.7800	.8870	.9720
X/CW								
.010	-.0822	-.0073	.3699	.1714	.0845	.1500	.1441	
.020	.0000	.0971	.3446	.0529	.0504	.0313	.0001	-.2057
.040		.1357	.2101					
.050	.0229							
.069				.0280	-.0181	-.0210	-.0445	
.080								-.2320
.081				.0128				
.086			.0970					
.094		.2107						
.150	.0411							
.157				.0147	-.0027	-.0172	-.0912	
.163								-.2157
.177		.2117						
.229			.0390					
.246	.0916							
.250		.0561						
.274				.0049	-.0266	-.0504	-.1213	
.345			.0229					
.390								-.2975
.400		.0341						
.402				-.0314	-.0409		-.1396	
.503			.0087					
.550								-.3447
.565				-.1314	-.1544			
.600			-.9722					
.637		-.1210					-.3248	
.650								
.670						-.2868		
.700								-.6066
.725					-.2380			
.750				-.2032				
.760						-.6331	-.7246	
.775			-.1781					
.799				-.6580	-.6442			
.809		-.2095						
.834	-.2450		-.7009					
.839								
.850		-.6274						
.857				-.3236	-.4530	-.3366		
.862			-.3061					
.865	-.5823							-.1514
.879		-.2992						
.900	-.3333							
.905				-.2959				
.919			-.2564				-.2064	
		-.1932						

AMES 11-073(OA148) -140A/B/C/R ORB LEFT WING BOT (XEBL67)

ALPHA (3) = 4.018 BETA (2) = .181

SECTION (1)LEFT WING BOT SURF DEPENDENT VARIABLE CP

2Y/BW	.2990	.3640	.4270	.5340	.6730	.7800	.8870	.9720
X/CW								
.950				-.2738	-.2053	-.2134		
.953			-.2143					
.955		-.1307						
.965	-.1285							
1.000			-.1094		-.0665		-.0729	

ALPHA (3) = 4.022 BETA (3) = 4.243 MACH = .89987 Q = 599.87 P = 1058.3 RN/L = 3.6007

SECTION (1)LEFT WING BOT SURF DEPENDENT VARIABLE CP

2Y/BW	.2990	.3640	.4270	.5340	.6730	.7800	.8870	.9720
X/CW								
.010	-.2174	-.1590	.3014	.2431	.1440	.2014	.1813	
.020	.0000	-.0142	.3236	.1277	.1041	.0960	.0636	-.3587
.040		.0378	.2321					
.050	-.0370			.0820	.0274	.0191	-.0048	
.060								-.3206
.080				.0469				
.081			.1306					
.088		.1700						
.094	.0060							
.150				.0285	.0172	.0006	-.0823	
.157								-.2632
.163		.2163						
.177			.0625					
.229	.0751							
.246		.0688						
.250				.0106	-.0167	-.0451	-.1276	
.274			.0315					
.345								-.3645
.390		.0420						
.400				-.0325	-.0399		-.1534	
.402			.0074					
.500								-.3930
.550				-.1324	-.1610			
.565			-.9432					
.600							-.3414	
.637		-.1209						
.650						-.3174		
.675								-.6248
.700					-.2442			
.775				-.2077				
.750						-.6405	-.7312	
.760			-.2179					

AMES 11-073(OA148) -140A/B/C/R ORB LEFT WING BOT (XE8L67)

ALPHA (3) = -.022 BETA (3) = 4.243

SECTION (1)LEFT WING BOT SURF DEPENDENT VARIABLE CP

2Y/BW	.2330	.3540	.4270	.5340	.6730	.7800	.8870	.9720
X/CW								
.775				-.6698	-.5996			
.799		-.2357						
.828			-.7050					
.834	-.2456							
.839		-.5682						
.850				-.3063	-.3937	-.3501		
.857			-.2966					
.862								-.1332
.865	-.5724							
.879		-.3052						
.900	-.3291			-.2807			-.2393	
.905			-.2406					
.919		-.1916						
.950				-.2480	-.2030	-.2490		
.953			-.1930					
.955		-.1309						
.965	-.1859							
1.000			-.0904		-.0850		-.0897	

ALPHA (4) = 7.995 BETA (1) = -3.860 MACH = .90040 Q = 600.32 P = 1057.8 RN/L = 3.5837

SECTION (1)LEFT WING BOT SURF DEPENDENT VARIABLE CP

2Y/BW	.2330	.3540	.4270	.5340	.6730	.7800	.8870	.9720
X/CW								
.010	-.1772	-.1773	.4142	.4934	.4570	.5048	.4733	
.020	.0000	.0533	.4678	.3753	.3810	.3824	.3538	-.2754
.040		.1215	.3808					
.050	.0373			.2704	.2618	.2653	.2398	
.059								
.080				.2214				-.1928
.081			.2642					
.085		.2835						
.094	.0776							
.150				.1904	.1847	.1751	.0998	
.153		.3254						-.1885
.174			.1875					
.223	.1546							
.246		.1900						
.252				.1480	.1276	.1039	.0316	
.274			.1552					
.248								
.330		.1436						-.2125

AMES 11-073(OA148) -140A/B/C/R ORB LEFT WING BOT (XEBL67)

ALPHA (4) = 7.985 BETA (1) = -3.860

SECTION (1)LEFT WING BOT SURF DEPENDENT VARIABLE CP

2Y/BW	.2990	.3640	.4270	.5340	.6730	.7800	.9870	.9720
X/CW								
.400				.0847	.0753		-.0325	
.402			.1213					
.503								-.2535
.550				-.0360	-.0596			
.565			-.6658					
.600							-.2271	
.637		-.0386						
.650						-.2008		
.670								-.5939
.700					-.2196			
.725				-.1638				
.750						-.6293	-.6898	
.760			-.1564					
.775				-.7009	-.6117			
.798		-.1728						
.808			-.7201					
.824	-.2183							
.839		-.6700						
.850				-.5014	-.5096	-.7972		
.857			-.4962					
.862								-.4930
.865	-.6177							
.879		-.4655						
.900	-.3832			-.2859			-.8001	
.905			-.2635					
.919		-.1934						
.950				-.2506	-.3176	-.4128		
.953			-.1891					
.955		-.1130						
.965	-.1124							
1.000			-.0796		-.1832		-.2839	

ALPHA (4) = 7.993 BETA (2) = .182 MACH = .90040 Q = 600.32 P = 1057.8 RN/L = 3.5837

SECTION (1)LEFT WING BOT SURF DEPENDENT VARIABLE CP

2Y/BW	.2990	.3640	.4270	.5340	.5730	.7800	.9870	.9720
X/CW								
.010	-.3670	-.3933	.2677	.4939	.4385	.4648	.4190	
.020	.0000	-.0954	.3843	.3915	.3783	.3747	.3334	-.4464
.040		-.0093	.3682					
.050	-.0441			.2904	.2695	.2648	.2285	
.070								-.3297
.080				.2392				

AMES 11-073(OA148) -140A/B/C/R ORB LEFT WING BOT (XEBL67)

ALPHA (4) = 7.993 BETA (2) = .182

SECTION (1)LEFT WING BOT SURF DEPENDENT VARIABLE CP

2Y/BW	.2990	.3640	.4270	.5340	.6730	.7800	.8870	.9720
X/CW								
.081			.2739					
.086		.2186						
.094	.0271							
.150				.1884	.1827	.1697	.0820	
.157								-.2358
.163		.3129						
.177			.1968					
.229	.1259							
.246		.1819						
.250				.1426	.1290	.0966	.0113	
.274			.1647					
.345								-.2761
.390		.1500						
.400				.0765	.0646		-.0590	
.402			.1145					
.503								-.2779
.550				-.0396	-.0680			
.565			-.6517					
.600							-.2637	
.637		-.0391						
.650						-.2115		
.670								-.6140
.700					-.2164			
.725				-.1656				
.750						-.6480	-.6679	
.760			-.1715					
.775				-.7105	-.6230			
.790		-.1907						
.804			-.7205					
.844	-.2181							
.849		-.6458						
.850				-.4863	-.4974	-.8107		
.857			-.5649					
.862								-.5193
.865	-.5954							
.879		-.4931						
.900	-.3902			-.2966			-.7175	
.905			-.2655					
.919		-.2139						
.950				-.2219	-.3197	-.4106		
.952			-.1722					
.955		-.1239						
.965	-.1606							
1.000			-.0734		-.1716		-.2361	

AMES 11-073(OA148) -140A/B/C/R ORB LEFT WING BOT (XE8L67)

ALPHA (4) = 7.992 BETA (3) = -.242 MACH = .90040 Q = 600.32 P = 1057.8 RN/L = 3.5837

SECTION (1)LEFT WING BOT SURF DEPENDENT VARIABLE CP

2Y/BW	.2990	.3640	.4270	.5340	.6730	.7800	.8870	.9720
X/CW								
.010	-.5466	-.3404	.0926	.4548	.4011	.4040	.3543	
.020	.0000	-.1680	.2612	.3869	.3645	.3493	.3023	-.4971
.040		-.0928	.3191					
.050	-.1297			.2973	.2682	.2519	.2187	
.069								-.3900
.080				.2363				
.081			.2579					
.086		.1461						
.094	-.0388							
.150				.1805	.1801	.1616	.0695	
.157								-.2442
.163		.2766						
.177			.1917					
.229	.0889							
.246		.1676						
.250				.1333	.1172	.0935	-.0044	
.274			.1543					
.345								-.2499
.390		.1461						
.400				.0696	.0568		-.0677	
.402			.1075					
.503								-.2895
.550				-.0464	-.0719			
.565			-.7076					
.600							-.2594	
.637		-.0389						
.650						-.2090		
.670								-.5859
.700					-.2108			
.725				-.1790				
.750						-.6623	-.6317	
.760			-.1929					
.775				-.7103	-.6310			
.798		-.2134						
.808			-.7031					
.814	-.2224							
.839		-.6118						
.850				-.5115	-.5023	-.7990		
.857			-.6246					
.862								-.5414
.865	-.5761							
.879		-.4909						
.900	-.3736			-.2873			-.8886	
.905			-.2630					
.919		-.2592						

AMES 11-073(OA148) -140A/B/C/R ORB LEFT WING BOT (XEBL67)

ALPHA (4) = 7.992 BETA (3) = 4.242

SECTION (1)LEFT WING BOT SURF DEPENDENT VARIABLE CP

2Y/BW	.2990	.3640	.4270	.5340	.6730	.7800	.8870	.9720
X/CW								
.950				-.1883	-.2884	-.4970		
.953			-.1418					
.955		-.1385						
.965	-.1995							
1.000			-.0463		-.1701		-.3750	

ALPHA (5) = 11.953 BETA (1) = -3.856 MACH = .89987 Q = 599.87 P = 1058.3 RN/L = 3.5762

SECTION (1)LEFT WING BOT SURF DEPENDENT VARIABLE CP

2Y/BW	.2990	.3640	.4270	.5340	.6730	.7800	.8870	.9720
X/CW								
.010	-.4705	-.5664	.2185	.6289	.6026	.5894	.5306	
.020	.0000	-.1375	.4254	.5704	.5703	.5579	.5058	-.3816
.040		-.0274	.4846					
.050	-.0142			.4679	.4612	.4523	.4185	
.069								-.2180
.080				.4028				
.081			.4102					
.086		.2789						
.094	.0812							
.150				.3300	.3344	.3276	.2445	
.157								-.1903
.163		.4162						
.177			.3217					
.229	.2071							
.246		.2979						
.250				.2665	.2561	.2360	.1534	
.274			.2689					
.345								-.1192
.390		.2527						
.400				.1813	.1736		.0660	
.402			.2149					
.503								-.2007
.550				.0507	.0246			
.565			-.6163					
.600							-.1575	
.637		.0466						
.650						-.1393		
.670								-.5777
.700					-.1913			
.725				-.1841				
.750						-.5916	-.5854	
.760			-.2076					

AMES 11-073(OA148) -140A/B/C/R ORB LEFT WING BOT (XE8L67)

ALPHA (5) = 11.953 BETA (1) = -3.856

SECTION (1)LEFT WING BOT SURF DEPENDENT VARIABLE CP

2Y/BW	.2990	.3640	.4270	.5340	.6730	.7800	.8870	.9720
X/CW								
.775				-.6569	-.6576			
.798		-.1947						
.808			-.6418					
.834	-.2311							
.839		-.6457						
.850				-.8070	-.6232	-.7491		
.857			-.6854					
.862								-.5561
.865	-.6399							
.879		-.5402						
.900	-.3947			-.5449			-.8180	
.905			-.5111					
.919		-.5014						
.950				-.2785	-.5781	-.8428		
.953			-.2455					
.955		-.1925						
.965	-.1930							
1.000			-.1158		-.3456		-.4886	

ALPHA (5) = 11.963 BETA (2) = .189 MACH = .89987 Q = 599.87 P = 1058.3 RN/L = 3.5762

SECTION (1)LEFT WING BOT SURF DEPENDENT VARIABLE CP

2Y/BW	.2990	.3640	.4270	.5340	.6730	.7800	.8870	.9720
X/CW								
.010	-.6855	-.4126	-.0023	.5488	.5281	.4814	.4249	
.020	.0000	-.2099	.2654	.5290	.5170	.4970	.4335	-.5173
.040		-.1138	.4118					
.050	-.1140			.4522	.4397	.4195	.3715	
.069								-.3496
.080				.3902				
.081			.3791					
.086		.1949						
.094	.0072							
.150				.3164	.3219	.3101	.2085	
.157								-.2388
.163		.3715						
.177			.3132					
.229	.1641							
.246		.2768						
.250				.2581	.2428	.2170	.1258	
.274			.2635					
.345								-.1916
.390		.2496						

AMES 11-073(0A148) -140A/B/C/R ORB LEFT WING BOT (XE8L67)

ALPHA (5) = 11.963 BETA (2) = .189

SECTION (1)LEFT WING BOT SURF DEPENDENT VARIABLE CP

2Y/BW	.2990	.3640	.4270	.5340	.6730	.7800	.8870	.9720
X/CW								
.400				.1721	.1587		.0316	
.402			.2035					
.503								-.2604
.550				.0406	.0111			
.565			-.6145					
.600							-.1936	
.637		.0481						
.650						-.1546		
.670								-.6010
.700					-.1928			
.725				-.1925				
.750						-.6128	-.6016	
.760			-.2241					
.775				-.6424	-.6774			
.798		-.2094						
.808			-.6574					
.834	-.2272							
.839		-.6314						
.850				-.7986	-.6255	-.7823		
.857			-.6514					
.862								-.5873
.865	-.6139							
.879		-.5455						
.900	-.3902			-.6599			-.8535	
.905			-.6699					
.919		-.5249						
.950				-.3073	-.5270	-.8384		
.953			-.2162					
.955		-.2116						
.965	-.2724							
1.000			-.0916		-.3060		.5107	

ALPHA (5) = 11.953 BETA (3) = 4.261 MACH = .89987 Q = 599.87 P = 1058.3 RN/L = 3.5762

SECTION (1)LEFT WING BOT SURF DEPENDENT VARIABLE CP

2Y/BW	.2990	.3640	.4270	.5340	.6730	.7800	.8870	.9720
X/CW								
.010	-.8102	-.3813	-.2148	.4402	.4323	.3594	.3053	
.020	.0000	-.3090	.1007	.4625	.4499	.4233	.3585	-.6749
.040		-.2159	.3243					
.050	-.2131			.4129	.4018	.3718	.3242	
.069								-.4778
.080				.3603				

AMES 11-073(OA148) -140A/B/C/R ORB LEFT WING BOT (XEBL67)

ALPHA (5) = 11.953 BETA (3) = 4.261

SECTION (1)LEFT WING BOT SURF DEPENDENT VARIABLE CP

2Y/BW	.2930	.3640	.4270	.5340	.6730	.7800	.8870	.9720
X/CW								
.081			.3373					
.086		.1069						
.094	-.0703							
.150				.2913	.2951	.2790	.1756	
.157								-.3004
.163		.3160						
.177			.2938					
.229	.1121							
.246		.2459						
.250				.2331	.2187	.1944	.0931	
.274			.2425					
.345								-.2634
.390		.2305						
.400				.1498	.1385		-.0016	
.402			.1837					
.503								-.3141
.550				.0280	-.0023			
.565			-.5929					
.600							-.2223	
.637		.0311						
.650						-.1690		
.670								-.6615
.700					-.1965			
.725				-.2235				
.750						-.6510	-.6238	
.760			-.2510					
.775				-.6252	-.7054			
.798		-.2555						
.808			-.8445					
.824	-.2423							
.839		-.6101						
.850				-.7811	-.6730	-.8019		
.857			-.5918					
.862								-.6532
.865	-.6190							
.879		-.5291						
.900	-.4184			-.8424			-.8826	
.905			-.6641					
.919		-.4854						
.950				-.3072	-.4702	-.8409		
.953			-.2302					
.955		-.2228						
.965	-.2969							
1.000			-.0973		-.2841		-.5265	

AMES 11-073(OA148) -140A/B/C/R ORB LEFT WING BOT (XE8L68) (05 AUG 75)

REFERENCE DATA

SREF = 2690.0000 SQ.FT. XMRP = 1076.6800 IN. XO
LREF = 474.8000 IN. YMRP = .0000 IN. YO
BREF = 935.0680 IN. ZMRP = 375.0000 IN. ZO
SCALE - .0300

PARAMETRIC DATA

RUDDER = .000 SPDBRK = 55.000
BDFLAP = 22.500 L-ELVN = -4.000
R-ELVN = -4.000 MACH = .600

ALPHA (1) = -3.934 BETA (1) = -7.845 MACH = .59574 Q = 593.04 P = 2387.2 RN/L = 4.8347

SECTION (1)LEFT WING BOT SURF DEPENDENT VARIABLE CP

2Y/BW	.2990	.3640	.4270	.5340	.6730	.7800	.8870	.9720
X/CW								
.010	-.3000	-.6695	-1.1245	-2.1315	-1.8657	-1.6505	-1.5753	
.020	.0000	-.5834	-1.1827	-1.9783	-1.8278	-1.3639	-1.4889	-1.1161
.040		-.5407	-1.0012					
.050	-.2544			-.9602	-1.1282	-1.1814	-1.1388	
.069								-.9857
.080				-.7248				
.081			-.6427					
.086		-.3563						
.094	-.2262							
.150				-.4775	-.5309	-.6221	-.6035	
.157								-.3723
.163		-.3881						
.177			-.4003					
.229	-.1871							
.246		-.3839						
.250				-.3324	-.3753	-.4093	-.4242	
.274			-.2913					
.345								-.4246
.390		-.2539						
.400				-.2453	-.2632		-.3168	
.402			-.2092					
.503								-.4449
.550				-.2627	-.2804			
.555			-.2135					
.600							-.3550	
.637		-.2426						
.650						-.3286		
.670								-.5420
.700					-.3282			
.725				-.2882				
.750						-.5332	-.4975	
.750			-.2714					
.775				-.6418	-.4145			
[illegible]		-.2981						
[illegible]			-.5700					
[illegible]	-.2473							
.839		-.3759						
.850				-.3333	-.3407	-.2754		

AMES 11-073(OA148) -140A/B/C/R ORB LEFT WING BO (XEBL68)

ALPHA (1) = -3.934 BETA (1) = -7.845

SECTION (1)LEFT WING BOT SURF DEPENDENT VARIABLE CP

2Y/BW	.2990	.3640	.4270	.5340	.6730	.7800	.8870	.9720
X/CW								
.857			-.2871					
.862								-.4011
.865	-.3678							
.879		-.2577						
.900	-.1935			-.2068			-.2065	
.905			-.1712					
.919		-.1549						
.950				-.0872	-.3193	-.0806		
.953			-.0663					
.955		-.0685						
.965	-.0554							
1.000			.0065		-.0534		-.0235	

ALPHA (1) = -3.918 BETA (2) = -3.844 MACH = .59574 Q = 593.04 P = 2387.2 RN/L = 4.8347

SECTION (1)LEFT WING BOT SURF DEPENDENT VARIABLE CP

2Y/BW	.2990	.3640	.4270	.5340	.6730	.7800	.8870	.9720
X/CW								
.010	-.1901	-.4471	-.8495	-2.0884	-2.0624	-1.7877	-1.6371	
.020	.0000	-.3901	-.9059	-1.8363	-1.9510	-1.4218	-1.5090	-.9721
.040		-.3532	-.7796					
.050	-.1746			-.8987	-.9680	-1.1401	-1.1341	
.069								-.8868
.080				-.6676				
.081			-.5391					
.086		-.2395						
.099	-.1587							
.150				-.4315	-.4752	-.5527	-.5669	
.157								-.3423
.163		-.2908						
.177			-.3563					
.229	-.1304							
.246		-.3336						
.250				-.3013	-.3519	-.3932	-.4049	
.274			-.2655					
.345								-.3934
.330		-.2362						
.400				-.2323	-.2560		-.2999	
.402			-.1975					
.503								-.3967
.550				-.2549	-.2762			
.565			-.1744					
.630							-.3497	

AMES 11-073(OA148) -140A/B/C/R ORB LEFT WING BOT (XEBL68)

ALPHA (1) = -3.918 BETA (2) = -3.844

SECTION (1)LEFT WING BOT SURF DEPENDENT VARIABLE CP

2Y/BW	.2990	.3640	.4270	.5340	.6730	.7800	.8870	.9720
X/CW								
.637		-.2357						
.650						-.3303		
.670								-.4956
.700					-.3300			
.725				-.2920				
.750						-.5340	-.4991	
.760			-.2716					
.775				-.6810	-.4221			
.798		-.2969						
.808			-.5733					
.834	-.2532							
.839		-.3817						
.850				-.3334	-.3288	-.2796		
.857			-.2938					
.862								-.4350
.865	-.3813							
.879		-.2629						
.900	-.2209			-.2059			-.2019	
.905			-.1766					
.919		-.1659						
.950				-.0902	-.2802	-.0830		
.953			-.0727					
.955		-.0816						
.965	-.0820							
1.000			-.0013		-.0252		-.0110	

ALPHA (1) = -3.895 BETA (3) = .193 MACH = .59574 Q = 593.04 P = 2387.2 RN/L = 4.8347

SECTION (1)LEFT WING BOT SURF DEPENDENT VARIABLE CP

2Y/BW	.2990	.3640	.4270	.5340	.6730	.7800	.8870	.9720
X/CW								
.010	-.0983	-.2409	-.5748	-1.8196	-2.0147	-2.1052	-1.8770	
.020	.0000	-.2073	-.6416	-1.3871	-1.5904	-1.5472	-1.7787	-.8323
.040		-.1934	-.5947					
.050	-.0991			-.7829	-.8831	-1.0361	-1.1110	
.069								-.6640
.080				-.5940				
.081			-.4416					
.086		-.1350						
.094	-.0990							
.150				-.3847	-.4359	-.4875	-.4931	
.157								-.3098
.163		-.2026						

AMES 11-073(OA148) -140A/B/C/R ORB LEFT WING BOT (XEBL68)

ALPHA (1) = -3.895 BETA (3) = .193

SECTION (1)LEFT WING BOT SURF DEPENDENT VARIABLE CP

2Y/BW	.2990	.3640	.4270	.5340	.6730	.7800	.8870	.9720
X/CW								
.177			-.3142					
.229	-.0781							
.246		-.2771						
.250				-.2772	-.3329	-.3593	-.3647	
.274			-.2419					
.345								-.3659
.390		-.2111						
.400				-.2199	-.2422		-.2797	
.402			-.1896					
.503								-.3730
.550				-.2448	-.2688			
.565			-.1823					
.600							-.3316	
.637		-.2269						
.650						-.3165		
.670								-.5057
.700					-.3197			
.725				-.2897				
.750						-.5211	-.4879	
.760			-.2788					
.775				-.7041	-.4201			
.798		-.2990						
.808			-.5652					
.834	-.2557							
.839		-.3802						
.850				-.3273	-.3041	-.2727		
.857			-.3004					
.862								-.4449
.855	-.3962							
.879		-.2705						
.900	-.2435			-.1998			-.1882	
.905			-.1835					
.919		-.1835						
.950				-.0811	-.2231	-.0805		
.953			-.0812					
.966		-.0995						
.966	-.1438							
1.000			.0070		-.0098		-.0046	

AMES 11-073(OA148) -140A/B/C/R ORB LEFT WING BOT (XEBL68)

ALPHA (1) = -3.903 BETA (4) = 4.270 MACH = .59574 Q = 593.04 P = 2387.2 RN/L = 4.8347

SECTION (1)LEFT WING BOT SURF DEPENDENT VARIABLE CP

2Y/BW	.2990	.3540	.4270	.5340	.6730	.7800	.8870	.9720
X/CW								
.010	-.0415	-.0900	-.3591	-1.4722	-1.6493	-2.0882	-1.9528	
.020	.0000	-.0872	-.4193	-1.1706	-1.2863	-1.4575	-1.7792	-.7016
.040		-.0692	-.4355					
.050	-.0587			-.6617	-.7531	-.8458	-.8926	
.069								-.5263
.080				-.5101				
.081			-.3582					
.086		-.0512						
.094	-.0635							
.150				-.3377	-.3815	-.4102	-.4296	
.157								-.2778
.163		-.1293						
.177			-.2672					
.229	-.0438							
.246		-.2283						
.250				-.2457	-.2934	-.3218	-.3186	
.274			-.2122					
.345								-.2971
.390		-.1814						
.400				-.1995	-.2227		-.2494	
.402			-.1713					
.503								-.3183
.550				-.2327	-.2515			
.565			-.1806					
.600							-.3013	
.637		-.2179						
.650						-.3005		
.670								-.4262
.700					-.3099			
.725				-.2807				
.750						-.5060	-.4630	
.760			-.2748					
.775				-.7081	-.4077			
.798		-.2968						
.808			-.5324					
.834	-.2555							
.839		-.3744						
.850				-.3095	-.2793	-.2677		
.857			-.2915					
.872								-.3374
.875	-.4019							
.879		-.2716						
.900	-.2544			-.1861			-.1609	
.905			-.1777					
.919		-.1830						

AMES 11-073(OA148) -140A/B/C/R ORB LEFT WING BOT (XEBL68)

ALPHA (1) = -3.903 BETA (4) = 4.270

SECTION (1)LEFT WING BOT SURF DEPENDENT VARIABLE CP

2Y/BW	.2990	.3640	.4270	.5340	.6730	.7800	.8870	.9720
X/CW								
.950				-.0736	-.1655	-.0698		
.953			-.0746					
.955		-.1024						
.965	-.1985							
1.000			-.0016		.0081		.0017	

ALPHA (1) = -3.916 BETA (5) = 8.339 MACH = .59574 Q = 593.04 P = 2387.2 RN/L = 4.8347

SECTION (1)LEFT WING BOT SURF DEPENDENT VARIABLE CP

2Y/BW	.2990	.3640	.4270	.5340	.6730	.7800	.8870	.9720
X/CW								
.010	-.0221	.0076	-.1446	-1.0631	-1.3345	-1.7247	-1.6990	
.020	.0000	.0064	-.1876	-.8951	-.9956	-1.1609	-1.4755	-.5623
.040		.0220	-.2683					
.050	-.0293			-.5258	-.6237	-.7391	-.7858	
.069								-.4076
.080				-.4111				
.081			-.2531					
.086		.0113						
.094	-.0338							
.150				-.2802	-.3240	-.3622	-.3858	
.157								-.2446
.163		-.0584						
.177			-.2129					
.229	-.0164							
.246		-.1692						
.250				-.2173	-.2572	-.2874	-.2839	
.274			-.1838					
.345								-.2432
.330		-.1567						
.400				-.1861	-.2033		-.2250	
.402			-.1591					
.503								-.2607
.550				-.2192	-.2358			
.565			-.2226					
.600							-.2785	
.637		-.2063						
.650						-.2885		
.670								-.3335
.700					-.2977			
.725				-.2681				
.750						-.4943	-.4420	
.760			-.2704					

AMES 11-073(OA148) -140A/B/C/R ORB LEFT WING BOT (XEBL68)

ALPHA (1) = -3.916 BETA (5) = 8.339

SECTION (1)LEFT WING BOT SURF DEPENDENT VARIABLE CP

2Y/BW	.2990	.3540	.4270	.5340	.6730	.7800	.8870	.9720
X/CW								
.775				-.6995	-.3956			
.798		-.2881						
.808			-.5069					
.834	-.2565							
.839		-.3722						
.850				-.2950	-.2485	-.2623		
.857			-.2930					
.862								-.2362
.865	-.3985							
.879		-.2783						
.900	-.2627			-.1692			-.1366	
.905			-.1834					
.919		-.1955						
.950				-.0608	-.1136	-.0582		
.953			-.0770					
.955		-.1122						
.965	-.2216							
1.000			.0074		.0247		.0025	

ALPHA (2) = .067 BETA (1) = -7.888 MACH = .59556 Q = 592.68 P = 2387.2 RN/L = 4.8372

SECTION (1)LEFT WING BOT SURF DEPENDENT VARIABLE CP

2Y/BW	.2990	.3540	.4270	.5340	.6730	.7800	.8870	.9720
X/CW								
.000	-.0078	-.0428	-.1594	-.9825	-1.0088	-1.0242	-.8651	
.020	.0000	-.0785	-.3093	-.8858	-.7860	-.8647	-.3227	-.3012
.040		-.0788	-.3873					
.050	-.0523			-.5324	-.5358	-.5705	-.5615	
.069								-.2545
.080				-.4040				
.081			-.3097					
.086		-.0511						
.094	-.0648							
.150				-.2477	-.2583	-.2623	-.2758	
.157								
.163		-.1353						-.2077
.177			-.2113					
.229	-.0539							
.246		-.2017						
.252				-.1778	-.2053	-.2223	-.2213	
.274			-.1537					
.345								-.2179
.390		-.1379						

AMES 11-073(OA148) -140A/B/C/R ORB LEFT WING BOT (XEBL68)

ALPHA (2) = .067 BETA (1) = -7.888

SECTION (1)LEFT WING BOT SURF DEPENDENT VARIABLE CP

2Y/BW	.2990	.3640	.4270	.5340	.6730	.7800	.8870	.9720
X/CW								
.400				-.1457	-.1610		-.1951	
.402			-.1161					
.503								-.2748
.550				-.1972	-.2135			
.565			-.2431					
.600							-.2815	
.637		-.1958						
.650						-.2784		
.670								-.3468
.700					-.2899			
.725				-.2572				
.750						-.5279	-.4716	
.760			-.2472					
.775				-.6576	-.4045			
.798		-.2713						
.808			-.5652					
.834	-.2304							
.839		-.3650						
.850				-.3238	-.3208	-.2644		
.857			-.2810					
.862								-.2076
.865	-.3731							
.879		-.2445						
.900	-.1743			-.2012			-.1558	
.905			-.1594					
.919		-.1369						
.950				-.0698	-.2591	-.0582		
.953			-.0529					
.955		-.0506						
.965	-.0425							
1.000			.0294		-.0426		.0270	

ALPHA (2) = .076 BETA (2) = -3.860 MACH = .59556 Q = 592.68 P = 2387.2 RN/L = 4.8372

SECTION (1)LEFT WING BOT SURF DEPENDENT VARIABLE CP

2Y/BW	.2990	.3640	.4270	.5340	.6730	.7800	.8870	.9720
X/CW								
.010	.0106	.0307	-.0446	-.7782	-.8451	-.8531	-.7436	
.020	.0002	.0023	-.1562	-.7135	-.6685	-.7339	-.7861	-.2532
.040		.0122	-.2705					
.050	-.0204			-.4424	-.4561	-.5003	-.5058	
.069								-.2221
.080				-.3490				

DATE 10 FEB 76 TABULATED PRESSURE DATA - OA148 (AMES 11-073-1)

AMES 11-073(OA148) -140A/B/C/R ORB LEFT WING BOT (XE8L68)

ALPHA (2) = .076 BETA (2) = -3.860

SECTION (1)LEFT WING BOT SURF DEPENDENT VARIABLE CP

2Y/BW	.2990	.3640	.4270	.5340	.6730	.7800	.8870	.9720
X/CW								
.081			-.2403					
.086		.0117						
.094	-.0340							
.150				-.2151	-.2375	-.2412	-.2579	
.157								-.1932
.163		-.0715						
.177			-.1788					
.229	-.0215							
.246		-.1626						
.250				-.1567	-.1890	-.2084	-.2122	
.274			-.1412					
.345								-.2010
.390		-.1217						
.400				-.1421	-.1548		-.1885	
.402			-.1089					
.503								-.2607
.550				-.1931	-.2095			
.565			-.2229					
.600							-.2792	
.637		-.1867						
.650						-.2762		
.670								-.3240
.700					-.2891			
.725				-.2626				
.750						-.5303	-.4663	
.760			-.2498					
.775				-.6860	-.4082			
.798		-.2794						
.808			-.5729					
.834	-.2348							
.839		-.3718						
.850				-.3228	-.3110	-.2724		
.857			-.2876					
.862								-.1797
.865	-.3863							
.879		-.2578						
.900	-.2084			-.1972			-.1442	
.905			-.1722					
.919		-.1600						
.950				-.0673	-.2547	-.0670		
.953			-.0577					
.958		-.0745						
.965	-.0770							
1.000			.0221		-.0050		.0236	

AMES 11-073(OA148) -140A/B/C/R ORB LEFT WING BOT (XE8L68)

ALPHA (2) = .078 BETA (3) = .177 MACH = .59556 Q = 502.68 P = 2387.2 RN/L = 4.8372

SECTION (1)LEFT WING BOT SURF DEPENDENT VARIABLE CP

2Y/BW	.2990	.3640	.4270	.5340	.6730	.7800	.8870	.9720
X/CW								
.010	.0073	.0645	.0690	-.5863	-.7055	-.7397	-.6688	
.020	.0000	.0491	-.0131	-.5587	-.5422	-.6210	-.7045	-.2396
.040		.0595	-.1606					
.050	-.0060			-.3564	-.3885	-.4439	-.4663	
.069								-.2123
.080				-.2876				
.081			-.1768					
.086		.0581						
.094	-.0167							
.150				-.1886	-.2043	-.2286	-.2534	
.157								-.1955
.163		-.0114						
.177			-.1468					
.223	-.0012							
.246		-.1297						
.250				-.1494	-.1748	-.1999	-.2140	
.274			-.1268					
.345								-.1917
.390		-.1051						
.400				-.1375	-.1543		-.1886	
.402			-.1054					
.503								-.2453
.550				-.1877	-.2111			
.565			-.2232					
.600							-.2785	
.637		-.1820						
.650						-.2761		
.670								-.2981
.700					-.2901			
.725				-.2643				
.750						-.5218	-.4583	
.760			-.2563					
.775				-.7114	-.4092			
.798		-.2811						
.808			-.5630					
.834	-.2374							
.839		-.3793						
.850				-.3234	-.2913	-.2738		
.857			-.2919					
.862								-.1498
.865	-.3908							
.879		-.2688						
.900	-.2336			-.1939			-.1352	
.905			-.1825					
.919		-.1762						

AMES 11-073(OA148) -140A/B/C/R ORB LEFT WING BOT (XE8L68)

ALPHA (2) = .078 BETA (3) = .177

SECTION (1)LEFT WING BOT SURF DEPENDENT VARIABLE CP

2Y/BW	.2990	.3640	.4270	.5340	.6730	.7800	.8870	.9720
X/CW								
.950				-.0749	-.2061	-.0652		
.953			-.0742					
.955		-.0950						
.965	-.1431							
1.000			.0205		.0181		.0253	

ALPHA (2) = .074 BETA (4) = 4.252 MACH = .59556 Q = 592.68 P = 2387.2 RN/L = 4.8372

SECTION (1)LEFT WING BOT SURF DEPENDENT VARIABLE CP

2Y/BW	.2990	.3640	.4270	.5340	.6730	.7800	.8870	.9720
X/CW								
.010	-.0244	.0463	.1369	-.3842	-.5140	-.5037	-.4752	
.020	.0000	.0560	.0721	-.3990	-.4184	-.4721	-.5375	-.1878
.040		.0726	-.0650					
.050	-.0141			-.2640	-.3055	-.3523	-.3710	
.069								-.1783
.080				-.2189				
.081			-.1164					
.086		.0804						
.094	-.0112							
.150				-.1612	-.1737	-.1897	-.2191	
.157								-.1935
.163		.0262						
.177			-.1148					
.229	.0079							
.246		-.0959						
.250				-.1230	-.1570	-.1753	-.1879	
.274			-.1002					
.345								-.1754
.390		-.0864						
.400				-.1238	-.1405		-.1755	
.402			-.0955					
.503								-.2237
.550				-.1799	-.1984			
.565			-.2324					
.600							-.2635	
.637		-.1756						
.650						-.2671		
.670								-.2659
.700					-.2809			
.725				-.2601				
.750						-.5026	-.4469	
.760			-.2586					

AMES 11-073(OA148) -140A/B/C/R ORB LEFT WING BOT (XE8L68)

ALPHA (2) = .074 BETA (4) = 4.252

SECTION (1)LEFT WING BOT SURF DEPENDENT VARIABLE CP

2Y/BW	.2990	.3640	.4270	.5340	.6730	.7800	.8870	.9720
X/CW								
.775				-.7162	-.3908			
.798		-.2764						
.808			-.5302					
.834	-.2410							
.839		-.3643						
.850				-.3118	-.2748	-.2802		
.857			-.2971					
.862								
.865	-.3854						-.1136	
.879		-.2689						
.900	-.2436			-.1837				
.905			-.1845			-.1183		
.919		-.1891						
.950				-.0622	-.1492	-.0560		
.953			-.0712					
.955		-.1043						
.965	-.1913							
1.000			.0212		.0269		.0357	

ALPHA (2) = .069 BETA (5) = 8.307 MACH = .59556 Q = 592.68 P = 2387.2 RN/L = 4.8372

SECTION (1)LEFT WING BOT SURF DEPENDENT VARIABLE CP

2Y/BW	.2990	.3640	.4270	.5340	.6730	.7800	.8870	.9720
X/CW								
.010	-.1132	-.0288	.1881	-.1938	-.3319	-.3618	-.3604	
.020	.0000	.0131	.1541	-.2558	-.2846	-.3545	-.3999	-.1738
.040		.0391	.0251					
.050	-.0433			-.1699	-.2248	-.2820	-.3106	
.069								
.080				-.1561				-.1949
.081			-.0554					
.086		.0832						
.094	-.0314							
.150				-.1230	-.1426	-.1565	-.2046	
.157								
.163		.0593						-.1807
.177			-.0804					
.229	.0048							
.246		-.0716						
.250				-.1089	-.1370	-.1605	-.1755	
.274			-.0866					
.345								
.390		-.0742						-.1675

AMES 11-073(OA148) -140A/B/C/R ORB LEFT WING BOT (XE8L68)

ALPHA (2) = .069 BETA (5) = 8.307

SECTION (1)LEFT WING BOT SURF DEPENDENT VARIABLE CP

2Y/BW	.2990	.3640	.4270	.5340	.6730	.7800	.8870	.9720
X/CW								
.400				-.1155	-.1255		-.1641	
.402			-.0887					
.503								-.2073
.550				-.1726	-.1937			
.565			-.2599					
.600							-.2515	
.637		-.1684						
.650						-.2583		
.670								-.2358
.700					-.2719			
.725				-.2508				
.750						-.4811	-.4290	
.760			-.2560					
.775				-.6977	-.3787			
.798		-.2699						
.808			-.5031					
.834	-.2445							
.839		-.3624						
.850				-.2995	-.2347	-.2692		
.857			-.2968					
.862								-.0757
.865	-.3957							
.879		-.2743						
.900	-.2578			-.1755			-.1047	
.905			-.1875					
.919		-.1935						
.950				-.0554	-.1062	-.0516		
.953			-.0797					
.955		-.1082						
.955	-.2279							
1.000			.0160		.0372		.0439	

ALPHA (3) = 4.022 BETA (1) = -7.901 MACH = .59644 Q = 594.20 P = 2386.1 RN/L = 4.8446

SECTION (1)LEFT WING BOT SURF DEPENDENT VARIABLE CP

2Y/BW	.2990	.3640	.4270	.5340	.6730	.7800	.8870	.9720
X/CW								
.010	.0793	.1450	.3135	-.0445	-.0474	.0846	.1424	
.020	.0000	.1424	.2167	-.1366	-.0589	-.0443	-.0046	.0142
.040		.1577	.0244					
[illegible]	.0671			-.1115	-.0971	-.0719	-.0516	
[illegible]								-.0256
[illegible]				-.0999				

AMES 11-073(OA148) -140A/B/C/R ORB LEFT WING BOT (XEBL68)

ALPHA (3) = 4.022 BETA (1) = -7.901

SECTION (1)LEFT WING BOT SURF DEPENDENT VARIABLE CP

2Y/BW	.2990	.3640	.4270	.5340	.6730	.7800	.8870	.9720
X/CW								
.081			-.0352					
.086		.1534						
.034	.0450							
.150				-.0438	-.0411	-.0316	-.0559	
.157								-.1214
.163		.0844						
.174			-.0318					
.229	.0544							
.246		-.0365						
.250				-.0293	-.0519	-.0575	-.0727	
.274			-.0276					
.345								-.0943
.390		-.0245						
.400				-.0499	-.0596		-.0977	
.402			-.0245					
.503								-.1935
.550				-.1302	-.1424			
.555			-.2790					
.600							-.2347	
.627		-.1319						
.650						-.2350		
.675								-.2819
.700					-.2576			
.725				-.2275				
.750						-.5389	-.4481	
.760			-.2178					
.775				-.6640	-.3895			
.799		-.2459						
.808			-.5570					
.824	-.2117							
.839		-.3490						
.850				-.3096	-.3018	-.2829		
.857			-.2603					
.862								-.1723
.865	-.3613							
[illegible]		-.2291						
[illegible]	-.1563			-.1898			-.1668	
.875			-.1569					
.913		-.1322						
[illegible]				-.0590	-.2397	-.0670		
[illegible]			-.0404					
[illegible]		-.0455						
[illegible]	-.0393							
[illegible]			.0526		.0170		.0553	

AMES 11-073(OA148) -140A/B/C/R ORB LEFT WING BOT (XEBL68)

ALPHA (3) = 4.025 BETA (2) = -3.862 MACH = .59644 Q = 594.20 P = 2386.1 RN/L = 4.8446

SECTION (1)LEFT WING BOT SURF DEPENDENT VARIABLE CP

2Y/BW	.2930	.3640	.4270	.5340	.6730	.7800	.8870	.9720
X/CW								
.010	.0189	.0707	.3252	.0564	.0372	.1437	.1809	
.020	.0000	.1144	.2620	-.0512	.0011	.0160	.0316	-.0580
.040		.1418	.0990					
.050	.0449			-.0516	-.0473	-.0371	-.0307	
.069								-.0722
.080				-.0516				
.081			.0097					
.095		.1630						
.094	.0387							
.150				-.0293	-.0179	-.0210	-.0551	
.157								-.1393
.163		.1144						
.177			-.0126					
.229	.0570							
.246		-.0126						
.250				-.0186	-.0412	-.0571	-.0802	
.274			-.0138					
.345								-.1314
.390		-.0108						
.400				-.0497	-.0616		-.1072	
.402			-.0197					
.503								-.2162
.550				-.1272	-.1503			
.565			-.2463					
.600							-.2444	
.637		-.1262						
.650						-.2440		
.670								-.2815
.700					-.2643			
.725				-.2331				
.750						-.5326	-.4615	
.760			-.2269					
.775				-.6927	-.3965			
.799		-.2533						
.803			-.5535					
.834	-.2192							
.839		-.3622						
.850				-.3192	-.2984	-.2938		
.857			-.2772					
[illegible]								-.1595
[illegible]	-.3575							
[illegible]		-.2440						
[illegible]	-.1345			-.1984			-.1684	
[illegible]			-.1729					
[illegible]		-.1611						

AMES 11-073(OA148) -140A/B/C/R ORB LEFT WING BOT (XEBL68)

ALPHA (3) = 4.025 BETA (2) = -3.862

SECTION : LEFT WING BOT SURF DEPENDENT VARIABLE CP

2Y/BW	.2330	.3540	.4270	.5340	.6730	.7800	.8870	.9720
X/CW								
.950				-.0531	-.2262	-.0659		
.953			-.0544					
.955		-.0692						
.965	-.0876							
1.000			.0427		.0461		.0575	

ALPHA (3) = 4.023 BETA (3) = .162 MACH = .59644 Q = 594.20 P = 2386.1 RN/L = 4.8446

SECTION : LEFT WING BOT SURF DEPENDENT VARIABLE CP

2Y/BW	.2330	.3540	.4270	.5340	.6730	.7800	.8870	.9720
X/CW								
.010	-.0745	-.0395	.2952	.1291	.0846	.1602	.1655	
.020	.0000	.0504	.2737	.0254	.0473	.0409	.0302	-.1315
.040		.0882	.1461					
.060	.0043			-.0065	-.0175	-.0178	-.0349	
.080								-.1403
.090				-.0199				
.091			.0433					
.095		.1523						
.100	.0147							
.140				-.0201	-.0201	-.0216	-.0613	
.150								-.1663
.160		.1320						
.170			.0010					
.175	.0507							
.240		.0051						
.250				-.0199	-.0391	-.0589	-.0816	
.260			-.0092					
.265								-.1610
.300		-.0036						
.350				-.0520	-.0617		-.1183	
.400			-.0239					
.450								-.2294
.500				-.1299	-.1513			
.550			-.2206					
.600							-.2492	
.650		-.1254						
.700						-.2449		
.750								-.2811
.775					-.2597			
.800				-.2308				
.850						-.5224	-.4631	
.900			-.2303					

AMES 11-073(OA148) -140A/B/C/R ORB LEFT WING BOT (XE8L68)

ALPHA (3) = 4.023 BETA (3) = .182

SECTION (1)LEFT WING BOT SURF DEPENDENT VARIABLE CP

2Y/BW	.2990	.3640	.4270	.5340	.6730	.7800	.8870	.9720
X/CW								
.775				-.7077	-.3912			
.798		-.2596						
.808			-.5409					
.834	-.2207							
.839		-.3611						
.850				-.3158	-.2755	-.2970		
.857			-.2889					
.882								-.1461
.885	-.3799							
.879		-.2575						
.900	-.2157			-.1914			-.1640	
.905			-.1837					
.919		-.1774						
.950				-.0630	-.1758	-.0641		
.953			-.0671					
.955		-.0898						
.965	-.1546							
1.000			.0397		.0540		.0573	

ALPHA (3) = 4.027 BETA (4) = 4.243 MACH = .59644 Q = 594.20 P = 2386.1 RN/L = 4.8446

SECTION (1)LEFT WING BOT SURF DEPENDENT VARIABLE CP

2Y/BW	.2990	.3640	.4270	.5340	.6730	.7800	.8870	.9720
X/CW								
.010	-.2073	-.2153	.2295	.1977	.1475	.2156	.2118	
.020	.0000	-.0637	.2547	.0687	.0935	.1007	.0966	-.2522
.040		-.0094	.1641					
.050	-.0511			.0476	.0170	.0205	.0120	
.069								-.2212
.080				.0128				
.081			.0743					
.086		.1170						
.094	-.0231							
.150				.0003	-.0002	-.0083	-.0535	
.157								-.1971
.163		.1387						
.177			.0220					
.239	.0329							
.246		.0175						
.250				-.0120	-.0324	-.0525	-.0873	
.274			.0014					
.345								-.1987
.350		.0003						

AMES 11-073(OA148) -140A/B/C/R ORB LEFT WING BOT (XE8L68)

ALPHA (3) = 4.027 BETA (4) = 4.243

SECTION (1)LEFT WING BOT SURF DEPENDENT VARIABLE CP

2Y/B	.2990	.3640	.4270	.5340	.6730	.7800	.8870	.9720
X/C								
.400				-.0512	-.0592		-.1181	
.402			-.0221					
.503								-.2479
.550				-.1285	-.1504			
.565			-.2541					
.600							-.2494	
.637		-.1189						
.650						-.2426		
.670								-.2910
.700					-.2575			
.725				-.2351				
.750						-.5137	-.4723	
.761			-.2384					
.775				-.7036	-.3765			
.790		-.2565						
.809			-.5119					
.814	-.2240							
.825		-.3553						
.850				-.3087	-.2554	-.3042		
.857			-.2895					
.900								-.1415
.865	-.3775							
.870		-.2629						
.900	-.2323			-.1812			-.1600	
.905			-.1889					
.919		-.1659						
.950				-.0597	-.1245	-.0676		
.953			-.0775					
.955		-.1011						
.965	-.1977							
1.000			.0339		.0501		.0497	

ALPHA (3 = 4.033 BETA (5) = 8.290 MACH = .59644 Q = 594.20 P = 2386.1 RN/L = 4.8446

SECTION (1)LEFT WING BOT SURF DEPENDENT VARIABLE CP

2Y/B	.2990	.3640	.4270	.5340	.6730	.7800	.8870	.9720
X/C								
.010	-.3826	-.3515	.1039	.2353	.1773	.2209	.1956	
.020	.0000	-.1911	.1690	.1372	.1321	.1238	.0994	-.3855
.040		-.1244	.1656					
.060	-.1276			.0812	.0641	.0357	.0138	
.080								-.3403
.090				.0371				

AMES 11-073(OA148) -140A/B/C/R ORB LEFT WING BOT (XEBL68)

ALPHA (3) = 4.033 BETA (5) = 8.290

SECTION (1)LEFT WING BOT SURF DEPENDENT VARIABLE CP

Z/ BW	.2930	.3640	.4270	.5340	.6730	.7800	.8870	.9720
X CW								
.081			.0904					
.095		.0566						
.034	-.0720							
.150				.0121	.0100	.0043	-.0575	
.157								-.2455
.153		.1295						
.177			.0351					
.229	.0056							
.246		.0196						
.250				-.0128	-.0304	-.0448	-.0964	
.274			.0000					
.345								-.2337
.390		.0010						
.400				-.0524	-.0598		-.1231	
.402			-.0235					
.503								-.2694
.550				-.1220	-.1459			
.555			-.2782					
.600							-.2455	
.637		-.1176						
.650						-.2320		
.670								-.2932
.700					-.2454			
.725				-.2331				
.750						-.4842	-.4525	
.760			-.2419					
.775				-.6753	-.3540			
.798		-.2499						
.808			-.4800					
.834	-.2307							
.849		-.3503						
.850				-.2913	-.2289	-.2927		
.857			-.2396					
.872								-.1356
.875	-.3957							
.879		-.2661						
.900	-.2458			-.1759			-.1480	
.905			-.1935					
.919		-.1952						
.920				-.0557	-.0991	-.0644		
.943			-.0839					
.955		-.1118						
.965	-.2292							
1.000			.0256		.0528		.0353	

AMES 11-073(OA148) -140A/B/C/R ORB LEFT WING BOT (XEBL68)

ALPHA (4) = 7.992 BETA (1) = -7.890 MACH = .59642 Q = 594.33 P = 2386.8 RN/L = 4.8439

SECTION (1)LEFT WING BOT SURF DEPENDENT VARIABLE CP

Z/BW	.2990	.3640	.4270	.5340	.6730	.7800	.8870	.9720
X/CW								
.010	-.0222	-.0688	.4032	.4680	.4775	.5512	.5314	
.020	.0000	.1055	.4335	.3296	.3955	.4187	.4291	-.1894
.040		.1610	.3112					
.050	.0961			.2210	.2559	.2743	.2924	
.069								-.1104
.080				.1754				
.091			.1988					
.095		.2546						
.094	.1102							
.140				.1392	.1540	.1717	.1277	
.157								-.1321
.163		.2421						
.177			.1281					
.204	.1350							
.246		.1158						
.250				.1068	.1010	.0917	.0589	
.274			.0981					
.346								-.0962
.342		.0862						
.400				.0460	.0434		-.0074	
.402			.0697					
.503								-.1955
.550				-.0570	-.0694			
.555			-.2975					
.600							-.1953	
.637		-.0669						
.650						-.1882		
.670								-.2793
.700					-.2095			
.735				-.1817				
.750						-.4840	-.4103	
.760			-.1888					
.775				-.6303	-.3472			
.799		-.2153						
.819			-.5213					
.824	-.1909							
.839		-.3185						
.851				-.2870	-.2706	-.2783		
.857			-.2476					
.870								-.2163
.875	-.3422							
.879		-.2136						
.900	-.1264			-.1810			-.2014	
[illegible]			-.1499					
.914		-.1244						

AMES 11-073(OA148) -140A/B/C/R ORB LEFT WING BOT (XEBL68)

ALPHA [illegible] = [illegible] BETA (11 = -7.690

SECTION (LEFT WING BOT SURF DEPENDENT VARIABLE CP

Z/BW	.2330	.3540	.4270	.5340	.6730	.7800	.8870	.9720
X/CW								
.950				-.0556	-.2132	-.0692		
.953			-.0415					
.955		-.0401						
.966	-.0461							
[illegible]			.0635		.0549		.0162	

ALPHA [illegible] = [illegible] BETA (21 = -3.860 MACH = .59642 Q = 594.33 P = 2386.8 RN/L = 4.8439

SECTION (11 LEFT WING BOT SURF DEPENDENT VARIABLE CP

Z/BW	.2330	.3540	.4270	.5340	.6730	.7800	.8870	.9720
X/CW								
[illegible]	-.1757	-.2935	.2821	.4617	.4543	.5025	.4649	
[illegible]	.0000	-.0348	.3719	.3469	.3958	.4048	.3982	-.3831
[illegible]		.0449	.3127					
[illegible]	.0274			.2412	.2588	.2699	.2754	
[illegible]								-.2404
[illegible]				.1842				
[illegible]			.2063					
[illegible]		.2099						
[illegible]	.0624							
[illegible]				.1373	.1562	.1610	.1098	
[illegible]								-.1859
[illegible]		.2437						
[illegible]			.1352					
[illegible]	.1121							
[illegible]		.1210						
[illegible]				.1004	.0906	.0882	.0371	
[illegible]			.0081					
[illegible]								-.1486
[illegible]		.0894						
[illegible]				.0404	.0341		-.0294	
[illegible]			.0640					
[illegible]								-.2471
[illegible]				-.0899	-.0733			
[illegible]			-.2676					
[illegible]							-.2066	
[illegible]		-.0821						
[illegible]						-.1962		
[illegible]								-.3076
[illegible]					-.2153			
[illegible]				-.1929				
[illegible]						-.4921	-.4282	
[illegible]			-.1954					

AMES 11-073(OA148) -140A/B/C/R ORB LEFT WING BOT (XEBL68)

ALPHA (4) = 7.993 BETA (2) = -3.860

SECTION (1)LEFT WING BOT SURF DEPENDENT VARIABLE CP

2Y/BW	.2990	.3640	.4270	.5340	.6730	.7800	.8870	.9720
X/CW								
.775				-.6552	-.3508			
.798		-.2246						
.808			-.5128					
.834	-.1954							
.839		-.3291						
.850				-.2965	-.2660	-.2910		
.857			-.2648					
.862							-.2308	
.866	-.3477							
.879		-.2295						
.900	-.1547			-.1895		-.2116		
.905			-.1700					
.919		-.1522						
.9[illegible]				-.0655	-.1909	-.0768		
.9[illegible]3			-.0606					
.9[illegible]		-.0679						
.985	-.1043							
1.000			.0554		.0686		.0123	

ALPHA (4) = 7.991 BETA (3) = .185 MACH = .59642 Q = 594.33 P = 2386.8 RN/L = 4.8439

SECTION (1)LEFT WING BOT SURF DEPENDENT VARIABLE CP

2Y/BW	.2990	.3640	.4270	.5340	.6730	.7800	.8870	.9720
X/CW								
.010	-.3645	-.5160	.1384	.4298	.4136	.4282	.3870	
.020	.0000	-.1891	.2858	.3472	.3663	.3680	.3405	-.5432
.040		-.0970	.2947					
.050	-.0803			.2474	.2541	.2481	.2420	
.069								-.3733
.080				.1827				
.081			.2058					
.096		.1457						
.094	.0089							
.150				.1343	.1520	.1426	.0765	
.157								-.2292
.153		.2327						
.177			.1370					
.209	.0804							
.2[illegible]		.1153						
.2[illegible]				.0924	.0792	.0693	.0105	
.2[illegible]			.0984					
.345								-.2191
.390		.0873						

AMES 11-073(OA148) -140A/B/C/R ORB LEFT WING BOT (XE8L68)

ALPHA (4) = 7.931 BETA (3) = .185

SECTION (1)LEFT WING BOT SURF DEPENDENT VARIABLE CP

2Y/BW	.2990	.3540	.4270	.5340	.6730	.7800	.8870	.9720
X/CW								
.400				.0347	.0248		-.0551	
.402			.0585					
.503								-.2884
.550				-.0639	-.0851			
.555			-.2516					
.600							-.2238	
.627		-.0666						
.650						-.2055		
.670								-.3373
.700					-.2177			
.725				-.2016				
.750						-.4832	-.4442	
.760			-.2077					
.775				-.6714	-.3344			
.799		-.2263						
.802			-.4955					
.824	-.1944							
.829		-.3266						
.850				-.2955	-.2581	-.3052		
.857			-.2779					
.870								-.2328
.885	-.3537							
.879		-.2406						
.910	-.1856			-.1858			-.1947	
.925			-.1642					
.929		-.1703						
.940				-.0651	-.1529	-.0854		
.947			-.0728					
.955		-.0866						
.965	-.1587							
1.000			.0422		.0626		.0124	

ALPHA (4) = 7.932 BETA (4) = 4.234 MACH = .59642 Q = 594.33 P = 2386.8 RN/L = 4.8439

SECTION (1)LEFT WING BOT SURF DEPENDENT VARIABLE CP

2Y/BW	.2990	.3540	.4270	.5340	.6730	.7800	.8870	.9720
X/CW								
.310	-.5507	-.6624	-.0409	.3752	.3625	.3448	.2895	
.320	.0000	-.7243	.1641	.3357	.3350	.3347	.2921	-.8098
.340		-.3839	.2513					
.350	-.1485			.2414	.2573	.2424	.2187	
.375								-.5363
.400				.1839				

AMES 11-073(OA148) -140A/B/C/R ORB LEFT WING BOT (XE8L68)

ALPHA (4) = 7.992 BETA (4) = 4.234

SECTION (1)LEFT WING BOT SURF DEPENDENT VARIABLE CP

2Y/BW	.2990	.3640	.4270	.5340	.6730	.7800	.8870	.9720
X/CW								
.091			.1932					
.096		.0695						
.094	-.0607							
.150				.1263	.1429	.1378	.0599	
.157								-.2969
.163		.2045						
.177			.1307					
.229	.0394							
.246		.0999						
.250				.0874	.0781	.0574	.0006	
.274			.0932					
.245								-.2844
.330		.0812						
.400				.0246	.0152		-.0720	
.402			.0501					
.503								-.3421
.550				-.0685	-.0905			
.565			-.2805					
.600							-.2350	
.637		-.0592						
.650						-.2048		
.670								-.3589
.700					-.2081			
.715				-.1925				
.750						-.4640	-.4500	
.760			-.2127					
.775				-.6477	-.2790			
.799		-.2288						
.808			-.4558					
.894	-.2030							
.879		-.3256						
.890				-.2864	-.2461	-.3076		
.897			-.2736					
.900								-.2395
.855	-.3558							
.879		-.2467						
.900	-.2032			-.1852			-.1989	
.905			-.1911					
.919		-.1842						
.920				-.0671	-.1482	-.0939		
.943			-.0800					
.955		-.1019						
.905	-.1937							
1.000			.0387		.0133		.0025	

AMES 11-073(OA148) -140A/B/C/R ORB LEFT WING BOT (XE8L68)

ALPHA (4) = 7.990 BETA (5) = 8.288 MACH = .59642 Q = 594.33 P = 2386.8 RN/L = 4.8439

SECTION (1)LEFT WING BOT SURF DEPENDENT VARIABLE CP

2Y/B	.2390	.3640	.4270	.5340	.6730	.7800	.8870	.9720
X/C								
.010	-.7447	-.6315	-.2525	.2931	.2859	.2235	.1744	
.020	.0000	-.4248	.0072	.2883	.2835	.2749	.2138	-1.0486
.040		-.3272	.1832					
.050	-.2619			.2203	.2344	.2119	.1718	
.069								-.7175
.080				.1696				
.091			.1720					
.146		-.0083						
.044	-.1461							
.150				.1153	.1260	.1232	.0313	
.157								-.3629
.163		.1659						
.177			.1232					
.209	.0026							
.246		.0806						
.250				.0732	.0630	.0439	-.0257	
.274			.0828					
.245								-.3582
.330		.0726						
.400				.0147	.0068		-.0950	
.402			.0458					
.513								-.3872
.550				-.0739	-.1009			
.585			-.3075					
.600							-.2440	
.637		-.0668						
.650						-.2169		
.670								-.3753
.700					-.2297			
.725				-.2056				
.750						-.4637	-.4583	
.760			-.2226					
.775				-.6531	-.3115			
.799		-.2316						
.813			-.4423					
.814	-.2060							
.879		-.3301						
.850				-.2840	-.2043	-.3056		
.877			-.2219					
.843								-.2311
.879	-.3671							
.879		-.2526						
.910	-.2235			-.1930			-.1900	
.914			-.1973					
.914		-.1958						

AMES 11-073(OA148) -140A/B/C/R ORB LEFT WING BOT (XE8L68)

ALPHA (4) = 7.990 BETA (5) = 8.288

SECTION (1)LEFT WING BOT SURF DEPENDENT VARIABLE CP

2Y/BW	.2990	.3640	.4270	.5340	.6730	.7800	.8870	.9720
X/CW								
.950				-.0798	-.1107	-.0932		
.953			-.0882					
.955		-.1119						
.965	-.2178							
1.000			.0390		.0204		.0174	

ALPHA (5) = 11.959 BETA (1) = -7.852 MACH = .59656 Q = 594.57 P = 2386.7 RN/L = 4.8403

SECTION (1)LEFT WING BOT SURF DEPENDENT VARIABLE CP

2Y/BW	.2990	.3640	.4270	.5340	.6730	.7800	.8870	.9720
X/CW								
.010	-.3082	-.6234	.1445	.5967	.5956	.5278	.4672	
.020	.0000	-.1613	.3828	.5581	.5816	.5782	.5299	-.7019
.040		-.0294	.4490					
.050	.0599			.4433	.4787	.4851	.4607	
.069								-.3777
.080				.3669				
.081			.3589					
.086		.2640						
.094	.1187							
.150				.2885	.3131	.3244	.2608	
.157								-.1951
.163		.3515						
.177			.2785					
.229	.1942							
.246		.2391						
.250				.2270	.2262	.2205	.1688	
.274			.2170					
.345								-.1102
.370		.1960						
.400				.1431	.1422		.0651	
.402			.1546					
.503								-.2179
.590				.0254	.0098			
.595			-.3236					
.600							-.1591	
.637		.0125						
.650						-.1343		
.670								-.3016
.700					-.1472			
.725				-.1323				
.750						-.4227	-.3680	
.780			-.1556					

AMES 11-073(OA148) -140A/B/C/R ORB LEFT WING BOT (XE8L68)

ALPHA (5) = 11.959 BETA (1) = -7.852

SECTION (1)LEFT WING BOT SURF DEPENDENT VARIABLE CP

2Y/BW	.2990	.3640	.4270	.5340	.6730	.7800	.8870	.9720
X/CW								
.775				-.5590	-.2257			
.798		-.1746						
.808			-.4404					
.834	-.1565							
.839		-.2785						
.850				-.2610	-.2463	-.2792		
.857			-.2221					
.862								-.2867
.865	-.2946							
.879		-.1875						
.900	-.0870			-.1844			-.2449	
.905			-.1539					
.919		-.1212						
.950				-.0732	-.1740	-.1001		
.953			-.0458					
.965		-.0426						
.965	-.0577							
1.000			.0535		-.0109		-.0899	

ALPHA (5) = 11.978 BETA (2) = -3.840 MACH = .59656 Q = 534.57 P = 2386.7 RN/L = 4.8403

SECTION (1)LEFT WING BOT SURF DEPENDENT VARIABLE CP

2Y/BW	.2990	.3640	.4270	.5340	.6730	.7800	.8870	.9720
X/CW								
.010	-.5381	-.8828	-.0666	.5048	.5014	.3995	.3296	
.020	.0000	-.3422	.2382	.5130	.5258	.5072	.4415	-.9536
.040		-.1975	.3936					
.050	-.0490			.4235	.4551	.4469	.4104	
.069								-.5515
.080				.3504				
.081			.3422					
.086		.1773						
.094	.0462							
.150				.2736	.2997	.3032	.2207	
.157								-.2653
.163		.3323						
.177			.2633					
.229	.1487							
.245		.2301						
.250				.2170	.2123	.2014	.1372	
.274			.2083					
.342								-.2036
.340		.1869						

AMES 11-073(OA148) -140A/B/C/R ORB LEFT WING BOT (XE8L68)

ALPHA (5) = 11.978 BETA (2) = -3.840

SECTION (1)LEFT WING BOT SURF DEPENDENT VARIABLE CP

2Y/BW	.2930	.3640	.4270	.5340	.6730	.7800	.8870	.9720
X/CW								
.400				.1290	.1241		.0313	
.402			.1533					
.503								-.2919
.550				.0136	-.0038			
.565			-.2972					
.600							-.1786	
.637		.0102						
.650						-.1468		
.670								-.3471
.700					-.1621			
.725				-.1471				
.750						-.4323	-.3915	
.760			-.1685					
.775				-.6813	-.2529			
.798		-.1832						
.809			-.4373					
.834	-.1611							
.839		-.2902						
.850				-.2642	-.2395	-.2949		
.857			-.2403					
.862								-.3014
.865	-.3090							
.879		-.2013						
.900	-.1254			-.1836			-.2407	
.905			-.1697					
.919		-.1425						
.950				-.0710	-.1700	-.1119		
.953			-.0659					
.965		-.0727						
.965	-.1228							
1.000			.0469		-.0071		-.0698	

ALPHA (5) = 11.981 BETA (3) = .186 MACH = .59656 Q = 594.57 R = 2386.7 RN/L = 4.8403

SECTION (1)LEFT WING BOT SURF DEPENDENT VARIABLE CP

2Y/BW	.2990	.3640	.4270	.5340	.6730	.7800	.8870	.9720
X/CW								
.010	-.7746	-1.0893	-.3094	.3953	.4000	.2495	.1882	
.020	.0000	-.5160	.0764	.4461	.4510	.4227	.3428	-1.1572
.040		-.3560	.3203					
.050	-.1675			.3939	.4180	.3940	.3458	
.069								-.7241
.080				.3280				

AMES 11-073(OA148) -140A/B/C/R ORB LEFT WING BOT (XE8L68)

ALPHA (5) = 11.981 BETA (3) = .186

SECTION (1)LEFT WING BOT SURF DEPENDENT VARIABLE CP

2Y/BW	.2990	.3640	.4270	.5340	.6730	.7800	.8870	.9720
X/CW								
.081			.3147					
.086		.0830						
.094	-.0397							
.150				.2551	.2772	.2749	.1827	
.157								-.3304
.163		.2916						
.177			.2459					
.229	.0978							
.246		.2062						
.250				.2001	.1922	.1776	.0968	
.274			.1990					
.345								-.2795
.390		.1739						
.400				.1193	.1053		.0020	
[illegible]			.1425					
[illegible]								-.3489
[illegible]				.0002	-.0211			
.585			-.2709					
.600							-.1966	
.637		.0009						
.650						-.1668		
.670								-.3686
.700					-.1876			
.725				-.1657				
.750						-.4493	-.4113	
.760			-.1856					
.775				-.6243	-.2876			
.798		-.1972						
.809			-.4222					
.834	-.1743							
.839		-.2994						
.850				-.2755	-.2242	-.3090		
.857			-.2562					
.882								-.3007
.885	-.3196							
.919		-.2156						
.930	-.1504			-.1942			-.2403	
.975			-.1849					
.910		-.1622						
.950				-.0836	-.1512	-.1343		
[illegible]			-.0877					
[illegible]		-.0936						
.985	-.1703							
1.000			.0347		-.0100		-.0344	

DATE 10 FEB 76 TABULATED PRESSURE DATA - OA148 (AMES 11-073-1)

AMES 11-073(OA148) -140A/B/C/R ORB LEFT WING BOT (XE8L68)

ALPHA (5) = 11.977 BETA (4) = 4.246 MACH = .59656 Q = 594.57 P = 2386.7 RN/L = 4.8403

SECTION (1)LEFT WING BOT SURF DEPENDENT VARIABLE CP

2Y/BW	.2990	.3640	.4270	.5340	.6730	.7800	.8870	.9720
X/CW								
.010	-.9732	-.9593	-.5079	.2581	.2675	.0716	.0181	
.020	.0000	-.6032	-.0952	.3584	.3601	.3168	.2293	-1.3619
.040		-.4572	.2319					
.050	-.2845			.3457	.3624	.3368	.2795	
.069								-.8621
.080				.2959				
.081			.2655					
.086		-.0086						
.094	-.1284							
.150				.2257	.2468	.2468	.1456	
.157								-.3587
.163		.2357						
.177			.2215					
.229	.0473							
.246		.1736						
.250				.1739	.1725	.1576	.0727	
.274			.1789					
.345								-.3152
.390		.1580						
.400				.1002	.0903		-.0185	
.402			.1249					
.503								-.3646
.550				-.0088	-.0343			
.556			-.2766					
.577							-.2063	
.637		-.0060						
.650						-.1823		
.670								-.3739
.700					-.2098			
.775				-.1744				
.740						-.4426	-.4208	
.760			-.1904					
.775				-.6333	-.2966			
.774		-.1965						
.818			-.4106					
.834	-.1785							
.839		-.2973						
.850				-.2772	-.2014	-.3112		
.857			-.2678					
.862								-.2794
.865	-.3319							
.879		-.2247						
.900	-.1768			-.2026			-.2535	
.905			-.1909					
.919		-.1740						

AMES 11-073(OA148) -140A/B/C/R ORB LEFT WING BOT (XE8L68)

ALPHA (5) = 11.977 BETA (4) = 4.246

SECTION (1)LEFT WING BOT SURF DEPENDENT VARIABLE CP

2Y/BW	.2990	.3640	.4270	.5340	.6730	.7800	.8870	.9720
X/CW								
.950				-.1066	-.1246	-.1449		
.953			-.0870					
.955		-.1025						
.955	-.1953							
1.000			.0437		-.0012		-.0554	

ALPHA (5) = 11.969 BETA (5) = 8.308 MACH = .59656 Q = 594.57 P = 2386.7 RN/L = 4.8403

SECTION (1)LEFT WING BOT SURF DEPENDENT VARIABLE CP

2Y/BW	.2990	.3640	.4270	.5340	.6730	.7880	.8870	.9720
X/CW								
.010	-1.2175	-.7234	-.7392	.0973	.1123	-.1350	-.1664	
.020	.0000	-.6393	-.2905	.2615	.2437	.1955	.1043	-1.3990
.040		-.5327	.1241					
.050	-.4322			.2905	.3028	.2727	.2065	
.069								-.9648
.080				.2547				
.081			.2163					
.086		-.0934						
.094	-.2298							
.150				.1988	.2161	.2113	.1045	
.157								-.4029
.163		.1770						
.177			.2037					
.229	-.0032							
.246		.1377						
.250				.1577	.1533	.1304	.0462	
.274			.1648					
.345								-.3631
.340		.1464						
.400				.0853	.0723		-.0469	
.402			.1108					
.503								-.3972
.550				-.0212	-.0474			
.555			-.3251					
.570							-.2173	
.637		-.0130						
.650						-.1931		
.670								-.3772
.700					-.2103			
.725				-.1754				
.750						-.4503	-.4112	
.750			-.2070					

AMES 11-073(OA148) -140A/B/C/R ORB LEFT WING BOT (XE8L68)

ALPHA (5) = 11.969 BETA (5) = 8.308

SECTION (1)LEFT WING BOT SURF DEPENDENT VARIABLE CP

2Y/Bw	.2990	.3640	.4270	.5340	.6730	.7800	.8870	.9720
X/CW								
.775				-.6311	-.2889			
.798		-.2029						
.808			-.3884					
.834	-.1801							
.839		-.2994						
.850				-.2752	-.1943	-.3163		
.857			-.2687					
.862								-.2645
.865	-.3255							
.879		-.2328						
.900	-.1858			-.2015			-.2580	
.905			-.1954					
.919		-.1860						
.950				-.1259	-.1192	-.1452		
.953			-.0894					
.955		-.1135						
.965	-.2002							
1.000			.0430		-.0223		-.0780	

AMES 11-073(OA148) -140A/B/C ORB LEFT WING BOT (XE8L69) (05 AUG 75)

REFERENCE DATA

SREF = 6600.0000 SQ.FT. XMRP = 1076.6800 IN. XO
LREF = 474.0000 IN. YMRP = .0000 IN. YO
BREF = 936.0686 IN. ZMRP = 375.0000 IN. ZO
SCALE = .0300

PARAMETRIC DATA

RUDDER = .000 SPDBRK = 55.000
BDFLAP = 22.500 L-ELVN = -10.000
R-ELVN = -10.000 MACH = .900

ALPHA (1) = -3.989 BETA (1) = -3.851 MACH = .89987 Q = 599.88 P = 1058.3 RN/L = 3.6263

SECTION (1)LEFT WING BOT SURF DEPENDENT VARIABLE CP

2Y/BW	.2990	.3640	.4270	.5340	.6730	.7800	.8870	.9720
X/CW								
.010	-.1314	-.3066	-.5063	-1.0973	-1.2650	-1.0337	-1.0629	
.020	.0000	-.2550	-.5472	-1.2746	-1.3244	-1.3410	-1.3563	-1.3189
.040		-.2270	-.6686					
.050	-.1287			-1.1682	-1.3194	-1.3792	-1.3912	
.069								-1.1762
.080				-1.0697				
.081			-.4867					
.086		-.1148						
.094	-.1167							
.150				-.6475	-1.1513	-1.2317	-1.2620	
.157								-.6139
.163		-.1737						
.177			-.4746					
.229	-.0501							
.246		-.3203						
.250				-.4070	-.4846	-.9370	-1.1641	
.274			-.3732					
.345								-.6649
.390		-.3436						
.400				-.2727	-.2691		-.3903	
.402			-.2511					
.503								-.6275
.550				-.3132	-.2335			
.565			-.7837					
.600							-.1896	
.637		-.2990						
.650						-.2164		
.670								-.8276
.700					-.2511			
.725				-.2701				
.750						-.6765	-1.0389	
.750			-.1951					
.775				-.5609	-.8183			
.798		-.2601						
.808			-.8190					
.834	-.2854							
.839		-.9012						
.850				-.4338	-.6231	-.5582		

AMES 11-073(OA148) -140A/B/C ORB LEFT WING BOT (XE8L69)

ALPHA (1) = -3.989 BETA (1) = -3.851

SECTION (1)LEFT WING BOT SURF DEPENDENT VARIABLE CP

2Y/BW	.2990	.3640	.4270	.5340	.6730	.7800	.8870	.9720
X/CW								
.857			-.4817					
.882								-1.0839
.865	-.9535							
.879		-.4329						
.900	-.4737			-.4452			-.4899	
.925			-.4650					
.919		-.3474						
.950				-.4793	-.4258	-.4990		
.953			-.4467					
.965		-.3190						
.965	-.2427							
1.000			-.3105		-.2216		-.3350	

ALPHA (1) = -3.987 BETA (2) = .189 MACH = .89987 Q = 599.88 P = 1058.3 RN/L = 3.6283

SECTION (1)LEFT WING BOT SURF DEPENDENT VARIABLE CP

2Y/BW	.2990	.3640	.4270	.5340	.6730	.7800	.8870	.9720
X/CW								
.010	-.0426	-.1266	-.3445	-1.0897	-1.2905	-1.0797	-1.1241	
.020	.0000	-.1029	-.3745	-1.2483	-1.3487	-1.3753	-1.2077	-.6911
.040		-.0781	-.4756					
.050	-.0597			-1.1325	-1.2892	-1.3776	-1.1641	
.069								-.6199
.080				-.7064				
.081			-.3849					
.086		-.0293						
.094	-.0552							
.150				-.5141	-.6996	-1.1182	-1.0538	
.157								-.3646
.163		-.0911						
.177			-.4136					
.229	-.0116							
.246		-.2429						
.250				-.3712	-.4170	-.5381	-.8213	
.274			-.3258					
.345								-.4679
.330		-.2858						
.400				-.2693	-.2929		-.5485	
.402			-.2474					
.503								-.4607
.550				-.3197	-.3311			
.565			-.7281					
.600							-.2771	

AMES 11-073(OA148) -140A/B/C ORB LEFT WING BOT (XE8L69)

ALPHA (1) = -3.987 BETA (2) = .189

SECTION (1)LEFT WING BOT SURF DEPENDENT VARIABLE CP

2Y/BW	.2990	.3640	.4270	.5340	.6730	.7800	.8870	.9720
X/CW								
.637		-.2894						
.650						-.2703		
.670								-.7947
.700					-.3114			
.725				-.3284				
.750						-.6811	-.9876	
.760			-.2252					
.775				-.5534	-.8849			
.798		-.3183						
.805			-.7662					
.834	-.3351							
.839		-.8544						
.850				-.4244	-.5871	-.5578		
.857			-.4512					
.862								-.8943
.865	-.9527							
.879		-.4332						
.900	-.5207			-.4453			-.5096	
.905			-.4491					
.919		-.3714						
.950				-.4792	-.4158	-.4978		
.953			-.4489					
.955		-.3430						
.965	-.2692							
1.000			-.3262		-.2547		-.4135	

ALPHA (1) = -3.961 BETA (3) = 4.272 MACH = .89987 Q = 599.88 P = 1058.3 RN/L = 3.6263

SECTION (1)LEFT WING BOT SURF DEPENDENT VARIABLE CP

2Y/BW	.2990	.3640	.4270	.5340	.6730	.7800	.8870	.9720
X/CW								
.010	.0091	-.0063	-.1682	-1.0482	-1.2986	-1.1042	-.9591	
.020	.0000	.0112	-.2207	-1.1070	-1.3219	-1.1641	-.9004	-.6080
.040		.0193	-.3094					
.050	-.0131			-.7017	-1.2527	-1.1430	-.9021	
.069								-.5762
.080				-.5465				
.091			-.3030					
.096		.0380						
.114	-.0153							
.150				-.4399	-.5240	-.9313	-.8684	
.157								-.3508
.163		-.0285						

AMES 11-073(OA148) -140A/B/C ORB LEFT WING BOT (XE8L69)

ALPHA (1) = -3.981 BETA (3) = 4.272

SECTION (1)LEFT WING BOT SURF DEPENDENT VARIABLE CP

2Y/BW	.2990	.3640	.4270	.5340	.6730	.7800	.8870	.9720
X/CW								
.177			-.3238					
.229	.0202							
.246		-.1983						
.250				-.3353	-.3584	-.6007	-.8003	
.274			-.2878					
.345								-.4339
.370		-.2478						
.400				-.2543	-.2663		-.5938	
.402			-.2325					
.503								-.4330
.550				-.3122	-.3572			
.565			-.7636					
.600							-.3660	
.647		-.2942						
.650						-.3147		
.670								-.7189
.700					-.3645			
.725				-.3898				
.750						-.6987	-.8919	
.760			-.2888					
.775				-.5034	-.8164			
.790		-.3398						
.803			-.7565					
.834	-.3535							
.839		-.8050						
.850				-.3990	-.4951	-.5134		
.857			-.4311					
.862								-.7334
.865	-1.0071							
.879		-.4220						
.900	-.5322			-.4211			-.5136	
.905			-.4468					
.919		-.3704						
.950				-.4538	- 3729	-.4880		
.963			-.4415					
.965		-.3354						
.965	-.3070							
1.000			-.3377		-.2763		-.4085	

AMES 11-073(OA148) -140A/B/C ORB LEFT WING BOT (XEBL69)

ALPHA (2) = .008 BETA (1) = -3.868 MACH = .90190 Q = 601.65 P = 1056.6 RN/L = 3.6047

SECTION (1)LEFT WING BOT SURF DEPENDENT VARIABLE CP

2Y/BW	.2990	.3640	.4270	.5340	.6730	.7800	.8870	.9720
X/CW								
.010	.0347	.0846	.0899	-.6769	-.8443	-.7819	-.6648	
.020	.0000	.0671	-.0192	-.6524	-.8273	-.8139	-.9489	-.3270
.040		.0765	-.1808					
.050	.0035			-.5421	-.6419	-.7344	-.8115	
.069								-.3850
.080				-.3702				
.081			-.2089					
.096		.[illegible]24						
.094	-.0102							
.150				-.2273	-.2333	-.2678	-.2847	
.157								-.2203
.163		.0155						
.177			-.1862					
.229	.0250							
.246		-.1351						
.250				-.1590	-.2117	-.2413	-.2537	
.274			-.1350					
.346								-.1649
.350		-.1167						
.400				-.1330	-.1433		-.1945	
.402			-.0932					
.503								-.2047
.[illegible]				-.2049	-.2132			
.[illegible]			-.8621					
.6[illegible]							-.2660	
.637		-.1999						
.6[illegible]						-.2862		
.672								-.7088
.700					-.2955			
.7[illegible]				-.3002				
.7[illegible]						-.6101	-1.0885	
.780			-.1763					
.775				-.5556	-.8210			
.7[illegible]		-.2307						
.818			-.8071					
.934	-.2638							
.929		-.9190						
.850				-.4158	-.5912	-.5032		
.857			-.4543					
.878								-.4948
.845	-.9464							
.873		-.4231						
.8[illegible]	-.4581			-.4482			-.3999	
.9[illegible]			-.4425					
.9[illegible]		-.3459						

AMES 11-073(OA148) -140A/B/C ORB LEFT WING BOT (XE8L69)

ALPHA (2) = .008 BETA (1) = -3.868

SECTION (1)LEFT WING BOT SURF DEPENDENT VARIABLE CP

2Y/BW	.2990	.3640	.4270	.5340	.6730	.7800	.8870	.9720
X/CW								
.950				-.4794	-.4330	-.4828		
.953			-.4408					
.955		-.3363						
.965	-.2394							
1.000			-.3012		-.2255		-.2653	

ALPHA (2) = .010 BETA (2) = .177 MACH = .90190 Q = 601.65 P = 1056.6 RN/L = 3.6047

SECTION (1)LEFT WING BOT SURF DEPENDENT VARIABLE CP

2Y/BW	.2990	.3640	.4270	.5340	.6730	.7800	.8870	.9720
X/CW								
.010	.0278	.1085	.1706	-.4972	-.6964	-.7594	-.6739	
.020	.0000	.1071	.0895	-.4822	-.6260	-.6755	-.8465	-.3453
.040		.1210	-.0663					
.050	.0184			-.3722	-.4937	-.5927	-.7305	
.069								-.3453
.080				-.2968				
.091			-.1337					
.096		.1286						
.094	.0143							
.150				-.1974	-.2176	-.2428	-.3405	
.157								-.2420
.1[illegible]		.0692						
.1[illegible]7			-.1451					
.229	.0439							
.245		-.0985						
.[illegible]0				-.1468	-.2031	-.2326	-.2676	
.274			-.1202					
.345								-.1659
.390		-.1004						
.400				-.1380	-.1565		-.2160	
.402			-.0956					
.503								-.2004
.550				-.2187	-.2251			
.555			-.8721					
.5[illegible]0							-.2752	
.637		-.2054						
.650						-.2998		
.670								-.6954
.7[illegible]					-.3123			
.725				-.3091				
.750						-.6036	-1.0922	
760			- 1907					

AMES 11-073(OA148) -140A/B/C ORB LEFT WING BOT (XE8L69)

ALPHA (2) = .010 BETA (2) = .177

SECTION (1)LEFT WING BOT SURF DEPENDENT VARIABLE CP

2Y/BW	.2990	.3640	.4270	.5340	.6730	.7800	.8870	.9720
X/CW								
.775								
.798		-.2380		-.5428	-.8134			
.808			-.8040					
.834	-.2761							
.839		-.9178						
.850				-.4084	-.5486	-.5029		
.857			-.4519					
.862								
.865	-.9205						-.4439	
.879		-.4347						
.900	-.5281			-.4359				
.905			-.4515			-.4182		
.919		-.3665						
.950				-.4740	-.3989	-.4646		
.953			-.4524					
.955		-.3282						
.965	-.2631							
1.000			-.3231		-.2375		-.3079	

ALPHA (2) = .007 BETA (3) = 4.253 MACH = .90190 Q = 601.65 P = 1056.6 RN/L = 3.6047

SECTION (1)LEFT WING BOT SURF DEPENDENT VARIABLE CP

2Y/BW	.2990	.3640	.4270	.5340	.6730	.7800	.8870	.9720
X/CW								
.010	-.0076	.0875	.2252	-.3184	-.5355	-.6034	-.5740	
.020	.0000	.1045	.1650	-.3654	-.4398	-.5189	-.6653	-.3011
.040		.1258	.0176					
.050	.0141							
.069				-.2577	-.3821	-.4483	-.5355	
.080				-.2187				-.3254
.081			-.0670					
.095		.1443						
.094	.0180							
.150				-.1577	-.1810	-.2176	-.3198	
.157								
.163		.1050						-.2347
.177			-.1043					
.229	.0500							
.246		-.0603						
.250				-.1274	-.1774	-.2096	-.2618	
.274			-.0932					
.345								
.390		-.0775					-.1579	

AMES 11-073(OA148) -140A/B/C ORB LEFT WING BOT (XE8L69)

ALPHA (2) = .007 BETA (3) = 4.253

SECTION (1)LEFT WING BOT SURF DEPENDENT VARIABLE CP

2Y/BW	.2990	.3640	.4270	.5340	.6730	.7800	.8870	.9720
X/CW								
.400				-.1345	-.1576		-.2240	
.402			-.0941					
.503								-.2000
.550				-.2184	-.2358			
.565			-.8799					
.600							-.2843	
.637		-.2024						
.650						-.3150		
.670								.6692
.700					-.3193			
.725				-.3117				
.750						-.5886	-1.0324	
.760			-.2027					
.775				-.5112	-.7924			
.798		-.2580						
.808			-.7922					
.834	-.2885							
.839		-.8850						
.850				-.3885	-.4760	-.4648		
.857			-.4387					
.862								-.3389
.865	-.9279							
.879		-.4308						
.900	-.5324			-.4077			-.4082	
.905			-.4484					
.919		-.3658						
.920				-.4436	-.3637	-.4303		
.923			-.4422					
.935		-.3271						
.965	-.3081							
1.000			-.3192		-.2687		-.2985	

ALPHA (3) = 4.005 BETA (1) = -3.869 MACH = .90083 Q = 600.78 P = 1057.6 RN/L = 3.5915

SECTION (1)LEFT WING BOT SURF DEPENDENT VARIABLE CP

2Y/BW	.2990	.3640	.4270	.5340	.6730	.7800	.8870	.9720
X/CW								
.010	.0146	.1201	.3952	.0946	.0138	.1081	.1245	
.020	.0000	.1659	.3376	-.0353	-.0056	-.0156	-.0328	-.1037
.030		.1954	.1641					
.050	.0587			-.0441	-.0538	-.0433	-.0647	
.069								-.1605
.080				-.0410				

AMES 11-073(OA148) -140A/B/C ORB LEFT WING BOT (XE8L69)

ALPHA (3) = 4.005 BETA (1) = -3.869

SECTION (1)LEFT WING BOT SURF DEPENDENT VARIABLE CP

2Y/BW	.2990	.3640	.4270	.5340	.6730	.7800	.8870	.9720
X/CW								
.081			.0625					
.086		.2287						
.094	.0579							
.150				-.0014	-.0112	-.0175	-.0819	
.157								-.1785
.163		.1909						
.177			.0217					
.229	.0973							
.246		.0341						
.250				.0029	-.0254	-.0483	-.1008	
.274			.0174					
.345								-.2099
.390		.0225						
.420				-.0240	-.0297		-.1202	
.422			.0127					
.503								-.2616
.550				-.1249	-.1410			
.565			-.9371					
.600							-.2909	
.637		-.1213						
.650						-.2694		
.670								-.7014
.700					-.2383			
.725				-.1980				
.750						-.5583	-.9946	
.760			-.1299					
.775				-.7783	-.8428			
.799		-.1709						
.808			-.8032					
.834	-.1972							
.839		-.8947						
.850				-.3887	-.4075	-.4255		
.857			-.4216					
.872								-.2148
.885	-.9118							
.890		-.3995						
.910	-.4569			-.4185			-.4014	
.925			-.4086					
.930		-.3078						
.940				-.4523	-.3645	-.3403		
.943			-.3902					
.945		-.2684						
.948	-.2071							
1.000			-.2539		-.1722		-.1777	

AMES 11-073(OA148) -140A/B/C ORB LEFT WING BOT (XEBL69)

ALPHA (3) = 4.002 BETA (2) = .179 MACH = .90083 Q = 600.78 P = 1057.6 RN/L = 3.5915

SECTION (1)LEFT WING BOT SURF DEPENDENT VARIABLE CP

2Y/BW	.2990	.3640	.4270	.5340	.6730	.7800	.8870	.9720
X/CW								
.010	-.0740	.0021	.3651	.1739	.0726	.1413	.1383	
.020	.0000	.0982	.3433	.0529	.0380	.0213	-.0062	-.1959
.040		.1353	.2068					
.050	.0219			.0216	-.0193	-.0319	-.0526	
.069								-.2313
.080				.0042				
.081			.0927					
.095		.2117						
.094	.0400							
.150				.0135	-.0056	-.0206	-.0954	
.157								-.2027
.163		.2095						
.177			.0374					
.229	.0894							
.245		.0569						
.250				.0047	-.0339	-.0565	-.1280	
.274			.0216					
.345								-.2645
.390		.0354						
.400				-.0301	-.0451		-.1460	
.402			.0067					
.503								-.3125
.550				-.1338	-.1568			
.555			-.9673					
.600							-.3160	
.637		-.1241						
.650						-.3042		
.670								-.6050
.700					-.2987			
.725				-.2447				
.740						-.6837	-.9460	
.760			-.1482					
.775				-.5019	-.8216			
.798		-.1758						
.808			-.8084					
.834	-.2225							
.839		-.9046						
.850				-.3872	-.5131	-.4618		
.857			-.4160					
.852								
.865	-.8839							-.2655
.879		-.4061						
.900	-.5044			-.4203			-.3820	
.905			-.4085					
.919		-.3296						

AMES 11-073(OA148) -140A/B/C ORB LEFT WING BOT (XE8L69)

ALPHA (3) = 4.002 BETA (2) = .179

SECTION (1)LEFT WING BOT SURF DEPENDENT VARIABLE CP

2Y/BW	.2990	.3640	.4270	.5340	.6730	.7800	.8870	.9720
X/CW								
.950				-.4513	-.3586	-.3491		
.953			-.4068					
.955		-.2982						
.965	-.2424							
1.000			-.2892		-.1913		-.2084	

ALPHA (3) = 4.006 BETA (3) = 4.240 MACH = .90083 Q = 600.78 P = 1057.6 RN/L = 3.5915

SECTION (1)LEFT WING BOT SURF DEPENDENT VARIABLE CP

2Y/BW	.2990	.3640	.4270	.5340	.6730	.7800	.8870	.9720
X/CW								
.010	-.2123	-.1478	.2996	.2389	.1399	.1917	.1843	
.020	.0000	-.0075	.3239	.1275	.0947	.0826	.0567	-.3378
.040		.0461	.2319					
.050	-.0310			.0799	.0281	.0087	-.0138	
.069								-.3087
.080				.0488				
.081			.1285					
.085		.1767						
.094	.0066							
.150				.0334	.0108	-.0060	-.0920	
.157								-.2407
.163		.2147						
.177			.0610					
.229	.0742							
.246		.0685						
.250				.0094	-.0232	-.0502	-.1320	
.274			.0310					
.345								-.3219
.390		.0402						
.400				-.0334	-.0473		-.1601	
.402			.0069					
.503								-.3211
.550				-.1364	-.1658			
.555			-.9356					
.604							-.2983	
.657		-.1233						
.677						-.2813		
[illegible]								-.5419
[illegible]					-.2227			
[illegible]				-.2107				
.750						-.7173	-.8563	
.761			-.1545					

AMES 11-073(OA148) -140A/B/C QRB LEFT WING BOT (XE8L69)

ALPHA (3) = 4.006 BETA (3) = 4.240

SECTION (1)LEFT WING BOT SURF DEPENDENT VARIABLE CP

2Y/BW	.2990	.3640	.4270	.5340	.6730	.7800	.8870	.9720
X/CW								
.775				-.5152	-.6960			
.798		-.1921						
.808			-.7966					
.834	-.2217							
.839		-.8875						
.850				-.3866	-.4946	-.4588		
.857			-.4038					
.862								-.2821
.865	-.8621							
.879		-.4069						
.900	-.5313			-.4045			-.3617	
.905			-.4085					
.919		-.3238						
.950				-.4294	-.3530	-.3508		
.953			-.4031					
.955		-.2981						
.965	-.3063							
1.000			-.2797		-.2227		-.2348	

ALPHA (4) = 7.976 BETA (1) = -3.869 MACH = .89993 Q = 600.24 P = 1058.8 RN/L = 3.5857

SECTION (1)LEFT WING BOT SURF DEPENDENT VARIABLE CP

2Y/BW	.2990	.3640	.4270	.5340	.6730	.7800	.8870	.9720
X/CW								
.010	-.1646	-.1913	.4142	.4999	.4483	.5085	.4670	
.020	.0000	.0501	.4694	.3769	.3790	.3820	.3592	-.2756
.040		.1259	.3809					
.050	.0341			.2731	.2699	.2605	.2488	
.069								-.1987
.080				.2224				
.091			.2646					
.096		.2878						
.094	.0825							
.150				.1852	.1846	.1764	.1003	
.157								-.1876
.163		.3308						
.177			.1896					
.229	.1581							
.246		.1887						
.250				.1467	.1241	.1044	.0299	
.274			.1531					
.345								-.1999
.330		.1507						

AMES 11-073(OA148) -140A/B/C ORB LEFT WING BOT (XEBL69)

ALPHA (4) = 7.976 BETA (1) = -3.869

SECTION (1)LEFT WING BOT SURF DEPENDENT VARIABLE CP

2Y/BW	.2990	.3540	.4270	.5340	.6730	.7800	.8870	.9720
X/CW								
.400				.0853	.0731		-.0349	
.402			.1177					
.503								-.2680
.550				-.0363	-.0609			
.565			-.6550					
.600							-.2198	
.637		-.0301						
.650						-.1897		
.670								-.7046
.700					-.2112			
.725				-.1512				
.750						-.8185	-1.0115	
.760			-.1139					
.775				-.5235	-.7424			
.799		-.1407						
.809			-.8899					
.834	-.1845							
.839		-.8994						
.850				-.4084	-.4740	-.4989		
.857			-.4170					
.862								-.3350
.865	-.9045							
.879		-.4100						
.900	-.5163			-.4311			-.3815	
.905			-.3934					
.919		-.3095						
.940				-.4540	-.3622	-.4446		
.943			-.3800					
.945		-.2686						
.965	-.2119							
1.000			-.2573		-.2119		-.2997	

ALPHA (4) = 7.978 BETA (2) = .182 MACH = .89993 Q = 600.24 P = 1058.8 RN/L = 3.5857

SECTION (1)LEFT WING BOT SURF DEPENDENT VARIABLE CP

2Y/BW	.2990	.3540	.4270	.5340	.6730	.7800	.8870	.9720
X/CW								
.010	-.3593	-.3735	.2750	.4904	.4289	.4583	.4105	
.020	.0000	-.0920	.3819	.3870	.3713	.3669	.3266	-.4438
.040		-.0086	.3642					
.060	-.0410			.2831	.2595	.2555	.2214	
.080								-.3301
.090				.2340				

AMES 11-073(OA148) -140A/B/C ORB LEFT WING BOT (XE8L69)

ALPHA (4) = 7.978 BETA (2) = .182

SECTION (1)LEFT WING BOT SURF DEPENDENT VARIABLE CP

2Y/BW	.2930	.3640	.4270	.5340	.6730	.7800	.8870	.9720
X/CW								
.081			.2691					
.086		.2186						
.094	.0264							
.150				.1808	.1771	.1628	.0784	
.157								-.2304
.163		.3115						
.177			.1926					
.229	.1236							
.246		.1806						
.250				.1389	.1246	.0927	.0035	
.274			.1511					
.345								-.2757
.350		.1459						
.400				.0745	.0601		-.0670	
.402			.1088					
.503								-.3112
.550				-.0435	-.0696			
.595			-.6657					
.600							-.2498	
.637		-.0395						
.650						-.2013		
.670								-.5577
.700					-.2063			
.725				-.1493				
.750						-.8370	-.8492	
.760			-.1218					
.775				-.5377	-.7419			
.798		-.1482						
.809			-.9003					
.834	-.1817							
.839		-.8978						
.850				-.4004	-.4608	-.5015		
.857			-.4183					
[illegible]								-.3100
[illegible]	-.8774							
[illegible]		-.4243						
.900	-.5313			-.4307			-.3978	
.906			-.4060					
.913		-.3240						
.910				-.4546	-.3777	-.4374		
.913			-.4042					
.955		-.2867						
[illegible]	-.2653							
1.000			-.2904		-.2363		-.3223	

AMES 11-073(OA148) -140A/B/C ORB LEFT WING BOT (XEBL69)

ALPHA (4) = 7.97 BETA (3) = -.241 MACH = .89993 Q = 600.24 P = 1058.8 RN/L = 3.5857

SECTION (1) LEFT WING BOT SURF DEPENDENT VARIABLE CP

2Y/BW	.2940	.3640	.4270	.5340	.6730	.7800	.8870	.9720
X/CW								
.010	-.5233	-.3457	.1098	.4517	.3988	.4028	.3531	
.020	.0000	-.1693	.2644	.3750	.3519	.3444	.2996	-.6533
.040		-.0892	.3174					
.050	-.1210			.2912	.2567	.2448	.2101	
.060								-.4721
.070				.2353				
.081			.2519					
.086		.1468						
.094	-.0350							
.150				.1768	.1735	.1551	.0626	
.157								-.2781
.163		.2764						
.177			.1873					
.229	.0916							
.246		.1669						
.250				.1289	.1118	.0832	-.0126	
.274			.1455					
.345								-.3131
.330		.1428						
.400				.0638	.0498		-.0926	
.402			.0987					
.503								-.3223
.500				-.0488	-.0909			
.565			-.6919					
.600							-.2684	
.637		-.0435						
.640						-.2090		
.670								-.4472
.700					-.2029			
.705				-.1532				
.750						-.8520	-.8887	
.760			-.1394					
.775				-.6041	-.7609			
.799		-.1593						
.800			-.9270					
.814	-.1925							
.839		-.0039						
.850				-.4316	-.4384	-.4936		
.857			-.4080					
.872								
.875	-.8549							-.3155
.879		-.4320						
.900	-.5450			-.4397			-.4009	
.905			-.4045					
.919		-.3146						

AMES 11-073(OA148) -140A/B/C ORB LEFT WING BOT (XEBL69)

ALPHA (4) = 7.979 BETA (3) = 4.241

SECTION (1) LEFT WING BOT SURF DEPENDENT VARIABLE CP

2Y/BW	.2990	.3640	.4270	.5340	.6730	.7800	.8870	.9720
X/CW								
.950				-.4468	-.3838	-.4340		
.953			-.3702					
.955		-.2754						
.985	-.3699							
1.000			-.2508		-.2665		-.3164	

ALPHA (5) = 11.950 BETA (1) = -3.853 MACH = .90010 Q = 600.36 P = 1058.5 RN/L = 3.5793

SECTION (1) LEFT WING BOT SURF DEPENDENT VARIABLE CP

2Y/BW	.2990	.3640	.4270	.5340	.6730	.7800	.8870	.9720
X/CW								
.010	-.4682	-.5684	.2106	.6291	.6013	.5866	.5301	
.020	.0000	-.1372	.4182	.5717	.5642	.5550	.5055	-.3566
.040		-.0281	.4835					
.050	-.0188			.4690	.4603	.4484	.4157	
.069								-.2115
.080				.4000				
.091			.4063					
.090		.2738						
.094	.0785							
.150				.3290	.3349	.3245	.2422	
.157								-.1731
.153		.4144						
[illegible]			.3225					
.229	.2031							
.246		.2954						
.250				.2670	.2543	.2295	.1509	
.274			.2679					
.345								-.1069
.330		.2547						
[illegible]				.1795	.1729		.0640	
.402			.2101					
.473								-.1978
[illegible]				.0486	.0198			
.585			-.6407					
[illegible]							-.1572	
.637		.0439						
[illegible]						-.1320		
[illegible]								-.5012
[illegible]					-.1917			
.7[illegible]				-.1501				
[illegible]						-.7972	-.9380	
.760			-.1594					

AMES 11-073(OA148) -140A/B/C ORB LEFT WING BOT (XEBL69)

ALPHA (5) = 11.950 BETA (1) = -3.853

SECTION (1)LEFT WING BOT SURF DEPENDENT VARIABLE CP

2Y/BW	.2990	.3640	.4270	.5340	.6730	.7800	.8870	.9720
X/CW								
.775				-.7764	-.8876			
.798		-.1606						
.809			-.9918					
.834	-.1897							
.839		-.9041						
.850				-.5482	-.6896	-1.0138		
.857			-.5420					
.862								-.5427
.865	-.9187							
.879		-.6540						
.900	-.6103			-.4980			-.8188	
.905			-.4705					
.919		-.3572						
.950				-.4743	-.4828	-.6488		
.953			-.4177					
.955		-.2952						
.965	-.2891							
1.000			-.3090		-.3745		-.4371	

ALPHA (5) = 11.955 BETA (2) = .189 MACH = .90810 Q = 600.36 P = 1058.5 RN/L = 3.5793

SECTION (1)LEFT WING BOT SURF DEPENDENT VARIABLE CP

2Y/BW	.2990	.3640	.4270	.5340	.6730	.7800	.8870	.9720
X/CW								
.010	-.0871	-.4118	-.0027	.5484	.5265	.4803	.4221	
.020	.0000	-.2120	.2626	.5309	.5125	.4928	.4315	-.4999
.040		-.1146	.4092					
.050	-.1205			.4476	.4384	.4117	.3690	
.063								-.3409
.080				.3951				
.081			.3765					
[illegible]		.1897						
[illegible]	.0080							
.150				.3157	.3167	.3022	.2026	
.157								
.153		.3678						-.2183
[illegible]			.3075					
.239	.1611							
.245		.2789						
.250				.2494	.2343	.2097	.1188	
[illegible]			.2545					
.345								
.350		.2446						-.1827

AMES 11-073(OA148) -140A/B/C ORB LEFT WING BOT (XEBL69)

ALPHA (5) = 11.955 BETA (2) = .189

SECTION (1)LEFT WING BOT SURF DEPENDENT VARIABLE CP

2Y/BW	.2990	.3640	.4270	.5340	.6730	.7800	.8870	.9720
X/CW								
.400				.1653	.1543		.0246	
.402			.1987					
.503								-.2566
.550				.0381	.0090			
.585			-.6140					
.600							-.1865	
.637		.0405						
.650						-.1487		
.670								-.5632
.700					-.1825			
.725				-.1515				
.750						-.8249	-.9305	
.760			-.1678					
.775				-.8728	-.9047			
.798		-.1606						
.808			-1.0138					
.824	-.1936							
.839		-.8940						
.850				-.6370	-.7035	-1.0049		
.857			-.7958					
.862								-.6068
.855	-.8998							
.879		-.7050						
.900	-.6032			-.5007			-.8257	
.905			-.4887					
.919		-.4376						
.950				-.4727	-.4689	-.6437		
.953			-.3830					
.955		-.3253						
.965	-.4090							
1.000			-.2652		-.3863		-.4737	

ALPHA (5) = 11.949 BETA (3) = 4.260 MACH = .90010 Q = 600.36 P = 1058.5 RN/L = 3.5793

SECTION (1)LEFT WING BOT SURF DEPENDENT VARIABLE CP

2Y/BW	.2990	.3640	.4270	.5340	.6730	.7800	.8870	.9720
X/CW								
.010	-.7353	-.3842	-.2070	.4421	.4257	.3546	.2980	
.020	.0000	-.3123	.0952	.4603	.4451	.4217	.3463	-.6648
.040		-.2239	.3176					
.050	-.2054			.4058	.3998	.3653	.3150	
.059								-.4800
.080				.3486				

AMES 11-073(OA148) -140A/B/C ORB LEFT WING BOT (XEBL69)

ALPHA (5) = 11.948 BETA (3) = 4.260

SECTION (1) LEFT WING BOT SURF DEPENDENT VARIABLE CP

2Y/BW	.2990	.3640	.4270	.5340	.6730	.7800	.8870	.9720
X/CW								
.081			.3290					
.086		.1023						
.094	-.0657							
.150				.2[illegible]	.2920	.2745	.1717	
.157								-.2848
.163		.3094						
.177			.2861					
.229	.1045							
.245		.2375						
.250				.2273	.2121	.1902	.0892	
.274			.2364					
.345								- 2625
.390		.2241						
.400				.1470	.1347		-.0045	
.402			.1787					
.503								-.3110
.550				.0264	-.0023			
.565			-.6001					
.600							-.2130	
.637		.0292						
.650						-.1628		
.670								-.5898
.700					-.1963			
.705				-.1536				
.750						-.8570	-.9413	
.760			-.1710					
.775				-.9036	-.9299			
.798		-.1648						
.808			-1.0180					
.814	-.1992							
.839		-.8984						
.850				-.6155	-.7070	-1.0118		
.857			-.8302					
[illegible]								-.6384
.866	-.8697							
.879		-.7435						
.900	-.5894			-.5073			-.7703	
.905			-.5277					
.913		-.4842						
.930				-.5016	-.4623	-.5702		
.943			-.3705					
.955		-.3759						
.965	-.4885							
1.000			-.2321		-.3529		-.5075	

AMES 11-073(OA148) -140A/B/C ORB LEFT WING BOT (XEBL70) 05 AUG 75)

REFERENCE DATA

SREF = 2690.0000 SQ.FT. XMRP = 1076.6800 IN. XO
LREF = 474.8000 IN. YMRP = .0000 IN. YO
BREF = 936.0680 IN. ZMRP = 375.0000 IN. ZO
SCALE = .0300

PARAMETRIC DATA

RUDDER = .000 SPDBRK = 55.000
BDFLAP = 22.500 L-ELVN = -10.000
R-ELVN = -10.000 MACH = .600

ALPHA (1) = -3.949 BETA (1) = -7.852 MACH = .59666 Q = 594.81 P = 2387.0 RN/L = 4.8517

SECTION (1)LEFT WING BOT SURF DEPENDENT VARIABLE CP

2Y/BW	.2990	.3640	.4270	.5340	.6730	.7800	.8870	.9720
X/CW								
.010	-.3150	-.7055	-1.1788	-2.0902	-1.7182	-1.6205	-1.4637	
.020	.0000	-.6216	-1.2394	-1.8723	-1.6193	-1.3147	-1.3076	-1.2154
.040		-.5723	-1.0512					
.060	-.2573			-1.0354	-1.2456	-1.2073	-1.1429	
.080								-1.1282
.080				-.7009				
.081			-.5033					
.096		-.3636						
.094	-.2372							
.150				-.5219	-.5922	-.7262	-.7460	
.157								-.4162
.163		-.4099						
.177			-.4164					
.229	-.1901							
.245		-.4094						
.250				-.3556	-.4299	-.4870	-.5070	
.274			-.3079					
.345								-.5111
.390		-.2724						
.400				-.2745	-.3111		-.3904	
.402			-.2321					
.503								-.5952
.550				-.3090	-.3397			
.565			-.2257					
.600							-.4843	
.637		-.2814						
.650						-.4480		
.670								-.7935
.700					-.4687			
.725				-.3661				
.750						-.7009	-.6924	
.760			-.3470					
.775				-.6045	-.5546			
.799		-.4043						
.808			-.7438					
.834	-.3208							
.839		-.4925						
.870				-.4647	-.4560	-.3579		

AMES 11-073(OA148) -140A/B/C ORB LEFT WING BOT (XE8L70)

ALPHA (1) = -3.949 BETA (1) = -7.852

SECTION (1)LEFT WING BOT SURF DEPENDENT VARIABLE CP

2Y/BW	.2990	.3640	.4270	.5340	.6730	.7800	.8870	.9720
X/CW								
.857			-.3669					
.862								-.7211
.865	-.5048							
.879		-.3177						
.900	-.3064			-.3630			-.2947	
.905			-.2669					
.919		-.2154						
.950				-.2609	-.3804	-.1419		
.953			-.1728					
.955		-.1279						
.965	-.1177							
1.000			-.0729		-.0917		-.1017	

ALPHA (1) = -3.933 BETA (2) = -3.843 MACH = .59666 Q = 594.81 P = 2387.0 RN/L = 4.8517

SECTION (1)LEFT WING BOT SURF DEPENDENT VARIABLE CP

2Y/BW	.2990	.3640	.4270	.5340	.6730	.7800	.8870	.9720
X/CW								
.010	-.2033	-.4626	-.9117	-2.1557	-1.8968	-1.6625	-1.5070	
.020	.0000	-.4115	-.9701	-1.9446	-1.7206	-1.3512	-1.3408	-.9856
.040		-.3775	-.8216					
.050	-.1797			-.9243	-1.1069	-1.1764	-1.1324	
.069								-.9259
.080				-.7020				
.081			-.5609					
.086		-.2584						
.094	-.1683							
.150				-.4622	-.5329	-.6375	-.6822	
.157								-.3734
.163		-.3076						
.177			-.3766					
.229	-.1367							
.246		-.3476						
.250				-.3258	-.3892	-.4319	-.4835	
.274			-.2886					
.345								-.4941
.390		-.2525						
.420				-.2649	-.2911		-.3635	
.422			-.2217					
.533								-.5427
.570				-.2997	-.3286			
.585			-.1924					
.600							-.4656	

AMES 11-073(OA148) -140A/B/C OA3 LEFT WING BOT (XEBL70)

ALPHA (1) = -3.933 BETA (2) = -3.843

SECTION (1)LEFT WING BOT SURF DEPENDENT VARIABLE CP

2Y/BW	.2990	.3640	.4270	.5340	.6730	.7800	.8870	.9720
X/CW								
.637		-.2699						
.650						-.4406		
.670								-.7603
.700					-.4681			
.725				-.3575				
.750						-.7007	-.6739	
.760			-.3357					
.775				-.5493	-.5580			
.798		-.4002						
.808			-.7397					
.834	-.3274							
.839		-.5102						
.850				-.4712	-.4439	-.3720		
.857			-.3738					
.862								-.7594
.865	-.5490							
.879		-.3356						
.900	-.3494			-.3978			-.3004	
.905			-.2943					
.919		-.2410						
.950				-.2950	-.3028	-.1523		
.953			-.1900					
.955		-.1607						
.965	-.1534							
1.000			-.0966		-.0876		-.1003	

ALPHA (1) = -3.929 BETA (3) = .189 MACH = .59666 Q = 594.81 P = 2387.0 RN/L = 4.8517

SECTION (1)LEFT WING BOT SURF DEPENDENT VARIABLE CP

2Y/BW	.2990	.3640	.4270	.5340	.6730	.7800	.8870	.9720
X/CW								
.010	-.1049	-.2588	-.6488	-1.9378	-2.0707	-1.8134	-1.5495	
.020	.0000	-.2258	-.6940	-1.4969	-1.7915	-1.4612	-1.3979	-.8955
.040		-.2055	-.6313					
.050	-.1035			-.8355	-.9334	-1.1313	-1.1152	
.069								-.6867
.080				-.6366				
.081			-.4782					
.086		-.1516						
.094	-.1076							
.150				-.4153	-.4671	-.5688	-.6229	
.157								-.3602
.163		-.2183						

AMES 11-073(OA148) -140A/B/C ORB LEFT WING BOT (XE8L70)

ALPHA (1) = -3.929 BETA (3) = .189

SECTION (1)LEFT WING BOT SURF DEPENDENT VARIABLE CP

2Y/BW	.2990	.3640	.4270	.5340	.6730	.7800	.8870	.9720
X/CW								
.177			-.3309					
.229	-.0846							
.246		-.2977						
.250				-.3044	-.3642	-.4169	-.4322	
.274			-.2663					
.345								-.5012
.390		-.2303						
.400				-.2482	-.2839		-.3444	
.402			-.2128					
.503								-.5735
.550				-.2855	-.3260			
.555			-.1841					
.600							-.4571	
.637		-.2678						
.650						-.4344		
.670								-.7431
.700					-.4614			
.725				-.3438				
.750						-.7120	-.6683	
.760			-.3340					
.775				-.5280	-.5478			
.798		-.4032						
.808			-.7274					
.834	-.3321							
.839		-.5102						
.850				-.4574	-.4194	-.3594		
.857			-.3716					
.867								-.7679
.865	-.5768							
.879		-.3506						
.900	-.3714			-.4274			-.2754	
.905			-.3075					
.919		-.2588						
.950				-.3255	-.2527	-.1443		
.953			-.2090					
.955		-.1791						
.965	-.2233							
1.000			-.1084		-.1027		-.0918	

AMES 11-073(OA148) -140A/B/C ORB LEFT WING BOT (XE8L70)

ALPHA (1) = -3.935 BETA (4) = 4.269 MACH = .59666 Q = 594.81 P = 2387.0 RN/L = 4.8517

SECTION (1)LEFT WING BOT SURF DEPENDENT VARIABLE CP

2Y/BW	.2990	.3640	.4270	.5340	.6730	.7800	.8870	.9720
X/CW								
.010	-.0465	-.1194	-.4175	-1.5647	-1.8071	-2.1844	-2.0061	
.020	.0000	-.1046	-.4637	-1.2146	-1.3967	-1.5785	-1.8333	-.8020
.040		-.0817	-.4715					
.050	-.0575			-.7003	-.8053	-.9291	-1.0470	
.069								-.5894
.080				-.5358				
.081			-.3778					
.082		-.0685						
.094	-.0622							
.150				-.3577	-.4170	-.4585	-.4824	
.157								-.3142
.163		-.1390						
.179			-.2890					
.249	-.0503							
.250		-.2401						
.252				-.2721	-.3255	-.3593	-.3674	
.274			-.2388					
.275								-.4208
.330		-.2038						
.400				-.2338	-.2579		-.2986	
.402			-.2033					
.503								-.4761
.550				-.2752	-.3001			
.585			-.2026					
.600							-.4113	
.637		-.2500						
.650						-.4090		
.670								-.6613
.700					-.4454			
.725				-.3318				
.750						-.6898	-.6199	
.760			-.3409					
.775				-.4823	-.5399			
.798		-.3940						
.808			-.7319					
.834	-.3439							
.839		-.5069						
.850				-.4498	-.3935	-.3718		
.857			-.3567					
.862								-.6648
.815	-.5857							
.879		-.3502						
.900	-.3891			-.4264			-.2478	
.905			-.2954					
.919		-.2630						

AMES 11-073(OA148) -140A/B/C ORB LEFT WING BOT (XEBL70)

ALPHA (1) = -3.935 BETA (4) = 4.269

SECTION (1)LEFT WING BOT SURF DEPENDENT VARIABLE CP

2Y/BW	.2990	.3640	.4270	.5340	.6730	.7800	.8870	.9720
X/CW								
.950				-.3128	-.2337	-.1598		
.953			-.2802					
.955		-.1793						
.965	-.2919							
1.000			-.1148		-.1093		-.1279	

ALPHA (1) = -3.949 BETA (5) = 8.334 MACH = .59666 Q = 594.81 P = 2387.0 RN/L = 4.8517

SECTION (1)LEFT WING BOT SURF DEPENDENT VARIABLE CP

2Y/BW	.2990	.3640	.4270	.5340	.6730	.7800	.8870	.9720
X/CW								
.010	-.0259	.0025	-.1761	-1.1582	-1.4413	-1.9309	-1.9232	
.020	.0000	-.0050	-.2259	-.9423	-1.0899	-1.2895	-1.7022	-.6889
.040		.0087	-.2971					
.050	-.0328			-.5611	-.6686	-.8104	-.8851	
.069								-.5033
.080				-.4469				
.081			-.2764					
.085		.0028						
.094	-.0312							
.150				-.3101	-.3571	-.3999	-.4335	
.157								-.2811
.163		-.0678						
.177			-.2342					
.229	-.0210							
.246		-.1904						
.290				-.2372	-.2961	-.3231	-.3321	
.274			-.2048					
.345								-.3307
.390		-.1795						
.400				-.2106	-.2333		-.2759	
.402			-.1806					
.573								-.3844
.550				-.2565	-.2862			
.555			-.2207					
.600							-.3946	
.637		-.2393						
.650						-.3939		
.670								-.4965
[illegible]					-.4231			
.725				-.3174				
.750						-.6791	-.5911	
.762			-.3253					

AMES 11-073(OA148) -140A/B/C ORB LEFT WING BOT (XE8L70)

ALPHA (1) = -3.949 BETA (5) = 8.334

SECTION (1)LEFT WING BOT SURF DEPENDENT VARIABLE CP

2Y/BW	.2990	.3640	.4270	.5340	.6730	.7800	.8870	.9720
X/CW								
.775				-.4087	-.5136			
.798		-.3839						
.808			-.6694					
.834	-.3344							
.839		-.5062						
.850				-.4303	-.3418	-.3641		
.867			-.3525					
[illegible]								-.5258
[illegible]	-.5990							
.873		-.3574						
.900	-.3939			-.4082			-.2258	
.905			-.3148					
.919		-.2660						
[illegible]				-.3214	-.2308	-.1462		
[illegible]			-.2114					
.955		-.1777						
.975	-.3323							
1.000			-.112		-.1263		-.1143	

ALPHA (2) = .049 BETA (1) = -7.888 MACH = .59628 Q = 593.97 P = 2386.4 RN/L = 4.8452

SECTION (1)LEFT WING BOT SURF DEPENDENT VARIABLE CP

2Y/BW	.2990	.3640	.4270	.5340	.6730	.7800	.8870	.9720
X/CW								
.010	-.0153	-.0622	-.2163	-1.0491	-1.1185	-1.1879	-1.0616	
.020	.0000	-.0858	-.3415	-.9406	-.8689	-.9828	-1.0526	-.3918
.040		-.0886	-.4160					
.050	-.0530			-.5763	-.5785	-.6310	-.6400	
[illegible]								-.3402
[illegible]				-.4446				
.081			-.3373					
.086		-.0619						
[illegible]	-.0633							
.150				-.2743	-.2896	-.3021	-.3171	
.157								-.2366
.163		-.1446						
.177			-.2284					
[illegible]	-.0628							
[illegible]		-.2178						
[illegible]				-.1951	-.2407	-.2558	-.2648	
.274			-.1743					
.345								-.2746
[illegible]		-.1517						

AMES 11-073(OA148) -140A/B/C ORB LEFT WING BOT (XE8L70)

ALPHA (2) = .049 BETA (1) = -7.888

SECTION (1)LEFT WING BOT SURF DEPENDENT VARIABLE CP

2Y/BW	.2990	.3640	.4270	.5340	.6730	.7800	.8870	.9720
X/CW								
.400				-.1728	-.1942		-.2380	
.402			-.1345					
.503								-.3676
.550				-.2357	-.2602			
.565			-.2652					
.600							-.3738	
.637		-.2206						
.650						-.3639		
.670								-.4710
.700					-.4194			
.725				-.3356				
.750						-.5919	-.6360	
.760			-.3169					
.775				-.6303	-.5440			
.798		-.3743						
.808			-.7312					
.834	-.3026							
.839		-.4843						
.850				-.4689	-.4253	-.4153		
.857			-.3773					
.862								-.3448
.865	-.5119							
.879		-.3066						
.900	-.2992			-.3605			-.2364	
.905			-.2412					
.919		-.1945						
.950				-.2060	-.3959	-.1312		
.953			-.1430					
.955		-.1105						
.965	-.0918							
1.000			-.0448		-.1055		-.0859	

ALPHA (2) = .055 BETA (2) = -3.864 MACH = .59628 Q = 593.97 P = 2386.4 RN/L = 4.8452

SECTION (1)LEFT WING BOT SURF DEPENDENT VARIABLE CP

2Y/BW	.2990	.3640	.4270	.5340	.6730	.7800	.8870	.9720
X/CW								
.010	.0094	.0197	-.0786	-.8419	-.9530	-.9961	-.9108	
.020	.0000	-.0069	-.1821	-.7791	-.7598	-.8268	-.9439	-.3480
[illegible]		-.0741	-.2901					
[illegible]	-.0088			-.4732	-.5054	-.5547	-.5890	
.063								-.2832
[illegible]				-.3810				

AMES 11-073(OA148) -140A/B/C ORB LEFT WING BOT (XE8L70)

ALPHA (2) = .056 BETA (2) = -3.864

SECTION 1 1'LEFT WING BOT SURF DEPENDENT VARIABLE CP

Y/BW	.2900	.3640	.4270	.5340	.6730	.7800	.8870	.9720
X/CW								
.081			-.2541					
.086		.0023						
.094	-.0361							
.150				-.2425	-.2640	-.2786	-.2969	
.157								-.2236
.163		-.0814						
.177			-.2020					
.229	-.0281							
.246		-.1752						
.250				-.1789	-.2219	-.2392	-.2496	
.274			-.1591					
.345								-.2470
.390		-.1338						
.400				-.1663	-.1900		-.2321	
.402			-.1312					
.503								-.3383
.550				-.2331	-.2562			
.565			-.2285					
.600							-.3591	
.637		-.2151						
.650						-.3598		
.670								-.4289
.700					-.4191			
.725				-.3336				
.750						-.5927	-.6316	
.760			-.3195					
.775				-.5714	-.5500			
.798		-.3803						
.808			-.7459					
.834	-.3102							
.833		-.4993						
.850				-.4872	-.4269	-.4063		
.857			-.3726					
.872								-.2951
.865	-.5410							
.879		-.3233						
.900	-.3441			-.3862			-.2378	
.905			-.2818					
.913		-.2234						
.950				-.2584	-.3465	-.1396		
.953			-.1643					
.955		-.1338						
.965	-.1335							
1.000			-.0653		-.0826		-.0916	

AMES 11-073(OA148) -140A/B/C ORB LEFT WING BOT (XE8L70)

ALPHA (2) = .056 BETA (3) = .180 MACH = .59628 Q = 593.97 P = 2386.4 RN/L = 4.8452

SECTION : 1 LEFT WING BOT SURF DEPENDENT VARIABLE CP

2Y/B	.2930	.3540	.4270	.5340	.6730	.7800	.8870	.9720
X/C								
.010	.0094	.0611	.0506	-.6310	-.7874	-.8453	-.8307	
.020	.0000	.0491	-.0422	-.6050	-.6231	-.7162	-.8405	-.3063
.040		.0559	-.1775					
.050	-.0081			-.3819	-.4205	-.5027	-.5402	
.060								-.2552
.080				-.3089				
.090			-.1898					
.100		.0526						
.140	-.0196							
.150				-.2119	-.2370	-.2569	-.2897	
.160								-.2123
.180		-.0282						
.190			-.1571					
.219	-.0070							
.240		-.1429						
.250				-.1643	-.2066	-.2356	-.2417	
.270			-.1409					
.290								-.2372
.340		-.1184						
.350				-.1624	-.1815		-.2239	
.400			-.1217					
.500								-.3167
.550				-.2318	-.2579			
.585			-.2257					
.600							-.3619	
.637		-.2119						
.650						-.3620		
.670								-.3977
.700					-.4209			
.725				-.3246				
.750						-.6210	-.6000	
.760			-.3204					
.775				-.5887	-.5392			
.794		-.3797						
.818			-.7395					
.814	-.3110							
.833		-.5131						
.850				-.4926	-.4209	-.3910		
.857			-.3740					
.875								-.2593
[illegible]	-.5551							
[illegible]		-.3449						
[illegible]	-.3896			-.4074			-.2272	
[illegible]			-.2803					
[illegible]		-.2439						

AMES 11-073(OA148) -140A/B/C ORB LEFT WING BOT (XEBL70)

ALPHA (2) = .058 BETA (3) = .180

SECTION (1)LEFT WING BOT SURF DEPENDENT VARIABLE CP

Y/BW	.2990	.3640	.4270	.5340	.6730	.7800	.8870	.9720
X/CW								
.950								
.953				-.2778	-.2626	-.1379		
.955			-.1732					
.955		-.1555						
.965	-.2069							
1.000			-.0856		-.0749		-.0822	

ALPHA (2) = .056 BETA (4) = 4.251 MACH = .59628 Q = 593.97 P = 2386.4 RN/L = 4.8452

SECTION (1)LEFT WING BOT SURF DEPENDENT VARIABLE CP

Y/BW	.2990	.3640	.4270	.5340	.6730	.7800	.8870	.9720
X/CW								
.010	-.0243	.0522	.1229	-.4366	-.5725	-.6253	-.6128	
.020	.0000	.0569	.0558	-.4457	-.4672	-.5601	-.6497	-.2372
.040		.0723	-.0818					
.060	-.0120							
.069				-.2911	-.3431	-.4033	-.4459	
.080								
.081				-.2457				-.2145
.085			-.1327					
.094		.0791						
.100	-.0108							
[illegible]								
[illegible]				-.1745	-.1984	-.2146	-.2628	
[illegible]		.0168						-.2026
[illegible]			-.1261					
.229	.0044							
.240		-.1120						
.250								
[illegible]				-.1425	-.1840	-.2089	-.2213	
[illegible]			-.1183					
[illegible]		-.0995						-.2099
[illegible]								
[illegible]				-.1461	-.1676		-.2100	
[illegible]			-.1109					
[illegible]								
[illegible]				-.2162	-.2436			-.2889
[illegible]			-.2316					
[illegible]								
.637		-.2053					-.3464	
[illegible]								
[illegible]						-.3551		
[illegible]								
[illegible]					-.4057			-.3544
[illegible]				-.3129				
[illegible]								
.760			-.3177			-.6317	-.5734	

AMES 11-073(OA148) -140A/B/C ORB LEFT WING BOT (XE8L70)

ALPHA (2) = .055 BETA (4) = 4.251

SECTION (1)LEFT WING BOT SURF DEPENDENT VARIABLE CP

2Y/BW	.2930	.3640	.4270	.5340	.6730	.7800	.8870	.9720
X/CW								
.775				-.4836	-.5231			
.792		-.3725						
.809			-.7239					
.834	-.3201							
.859		-.5004						
.850				-.4677	-.3909	-.3707		
.867			-.3632					
.882							-.2076	
.885	-.5661							
.893		-.3497						
.900	-.3708			-.3948		-.2052		
.905			-.3006					
.919		-.2579						
.910				-.2832	-.2193	-.1286		
.943			-.1730					
.945		-.1684						
.955	-.2709							
1.000			-.0948		-.0868		-.0546	

ALPHA (2) = .051 BETA (5) = 8.306 MACH = .59628 Q = 593.97 P = 2386.4 RN/L = 4.8452

SECTION (1)LEFT WING BOT SURF DEPENDENT VARIABLE CP

2Y/BW	.2930	.3640	.4270	.5340	.6730	.7800	.8870	.9720
X/CW								
.010	-.1048	-.0200	.1778	-.2327	-.4032	-.4490	-.4586	
.020	.0000	.0183	.1343	-.2901	-.3437	-.4302	-.5063	-.2016
.040		.0408	.0092					
.050	-.0413			-.2010	-.2626	-.3204	-.3679	
.069								-.2172
.080				-.1805				
.091			-.0726					
.100		.0224						
.094	-.0327							
[illegible]				-.1405	-.1661	-.1877	-.2376	
[illegible]								-.1890
[illegible]		.0553						
[illegible]			-.0327					
[illegible]	-.0002							
[illegible]		-.0760						
[illegible]				-.1221	-.1600	-.1889	-.2084	
[illegible]			-.1034					
[illegible]								-.1930
[illegible]		-.0845						

AMES 11-073(OA148) -140A/B/C ORB LEFT WING BOT (XEBL7D)

ALPHA (2) = .051 BETA (5) = 8.306

SECTION (1)LEFT WING BOT SURF DEPENDENT VARIABLE CP

2Y/BW	.2990	.3640	.4270	.5340	.6730	.7800	.8870	.9720
X/CW								
.400				-.1416	-.1555		-.2028	
.402			-.1113					
.503								-.2625
.550				-.2103	-.2338			
.555			-.2730					
.600							-.3313	
.637		-.1949						
.650						-.3457		
.670								-.3176
.700					-.3911			
.725				-.2936				
.750						-.6437	-.5377	
.750			-.3153					
.775				-.4243	-.4934			
.798		-.3684						
.808			-.6669					
.834	-.3283							
.839		-.5031						
.850				-.4424	-.3382	-.3426		
.857			-.3585					
.862								-.1718
.865	-.5877							
.879		-.3578						
.900	-.3935			-.3811			-.1770	
.906			-.2916					
.919		-.2656						
.940				-.2763	-.1988	-.1117		
.943			-.1832					
.955		-.1663						
.965	-.3335							
1.000			-.0918		-.0880		-.0285	

ALPHA (2) = 4.000 BETA (1) = -7.898 MACH = .59578 Q = 593.03 P = 2386.8 RN/L = 4.8456

SECTION (1)LEFT WING BOT SURF DEPENDENT VARIABLE CP

2Y/BW	.2990	.3640	.4270	.5340	.6730	.7800	.8870	.9720
X/CW								
.010	.0787	.1458	.2967	-.0834	-.1012	.0075	.0529	
.020	.0000	.1380	.1978	-.1055	-.1072	-.1101	-.1055	-.0105
.040		.1513	-.0013					
.050	.0655			-.1498	-.1386	-.1283	-.1117	
.059								-.0464
.080				-.1292				

AMES 11-073(OA148) -140A/B/C ORB LEFT WING BOT (XEBL70)

ALPHA (3) = 4.000 BETA (1) = -7.898

SECTION (11)LEFT WING BOT SURF DEPENDENT VARIABLE CP

2Y/BW	.2990	.3640	.4270	.5340	.6730	.7800	.8870	.9720
X/CW								
.091			-.0526					
.095		.1432						
.094	.0446							
.150				-.0722	-.0712	-.0622	-.0922	
.157								-.1407
.163		.0680						
.177			-.0505					
.229	.0498							
.246		-.0522						
.260				-.0503	-.0825	-.0956	-.1077	
.274			-.0412					
.345								-.1438
.390		-.0418						
.400				-.0767	.0896		-.1385	
.402			-.0467					
.503								-.2645
.550				-.1669	-.1982			
.565			-.2952					
.600							-.3290	
.637		-.1679						
.650						-.3344		
.670								-.3713
.700					-.3962			
.725				-.3145				
.750						-.7308	-.6665	
.760			-.2971					
.775				-.6768	-.5463			
.799		-.3550						
.808			-.7452					
.834	-.2795							
.839		-.4780						
.850				-.4857	-.4276	-.3318		
.857			-.3523					
.862								-.1949
.885	-.5043							
.879		-.3025						
.900	-.3035			-.3276			-.1886	
.905			-.2274					
.919		-.1765						
.950				-.1547	-.3313	-.0869		
.953			-.1171					
.955		-.0912						
.985	-.0809							
1.000			-.0205		-.0346		.0066	

AMES 11-073(OA148) -140A/9/C ORB LEFT WING BOT (XE8L70)

ALPHA (3) = 4.002 BETA (2) = -3.861 MACH = .59578 Q = 593.03 P = 2386.8 RN = 4.8456

SECTION (1)LEFT WING BOT SURF DEPENDENT VARIABLE CP

2Y/Bw	.2990	.3640	.4270	.5340	.6730	.7800	.8870	.9720
X/CW								
.010	.0223	.0779	.3147	.0173	-.0179	.0872	.0934	
.020	.0000	.1148	.2508	-.0931	-.0427	-.0520	-.0517	-.0526
.040		.1370	.0832					
.050	.0404			-.0739	-.0884	-.0804	-.0777	
.069								-.0832
.080				-.0746				
.091			-.0061					
.095		1592						
.0[illegible]	.0412							
.150				-.0519	-.0494	-.0505	-.0880	
.157								-.1508
163		.1065						
.177			-.0253					
.209	.0523							
.246		-.0239						
.250				-.0408	-.0702	-.0849	-.1070	
.274			-.0315					
.345								-.1566
.340		-.0277						
.400				-.0734	-.0911		-.1430	
.402			-.0419					
.503								-.2686
.550				-.1685	-.1961			
.565			-.2630					
.600							-.3207	
.637		-.1586						
.650						-.3365		
.673								-.3469
.700					-.3977			
.725				-.3081				
.750						-.7287	-.6490	
.760			-.2988					
.775				-.6378	-.5495			
.799		-.3628						
.809			-.7413					
.85[illegible]	-.2904							
.829		-.4956						
.850				-.4951	-.4340	-.3483		
.8[illegible]			-.3641					
.852								-.1701
.855	-.5315							
.879		-.3163						
.9[illegible]0	-.3449			-.3671			-.2004	
.905			-.2502					
.910		-.2155						

AMES 11-073(OA148) -140A/B/C ORB LEFT WING BOT (XEBL70)

ALPHA (3) = 4.002 BETA (2) = -3.861

SECTION (1)LEFT WING BOT SURF DEPENDENT VARIABLE CP

2Y/BW	.2990	.3640	.4270	.5340	.6730	.7800	.8870	.9720
X/CW								
.950				-.2041	-.2673	-.0988		
.953			-.1381					
.955		-.1191						
.965	-.1301							
1.000			-.0467		-.0235		-.0192	

ALPHA (3) = 4.000 BETA (3) = .182 MACH = .59578 Q = 593.03 P = 2386.8 RN/L = 4.8456

SECTION (1)LEFT WING BOT SURF DEPENDENT VARIABLE CP

2Y/BW	.2990	.3640	.4270	.5340	.6730	.7800	.8870	.9720
X/CW								
.010	-.0759	-.0326	.2946	.0988	.0368	.1062	.0938	
.020	.0000	.0533	.2668	-.0201	.0049	-.0100	-.0354	-.1123
.040		.0920	.1283					
.050	.0073			-.0336	-.0354	-.0637	-.0866	
.069								-.1265
.080				-.0434				
.091			.0265					
.086		.1474						
.094	.0171							
.150				-.0404	-.0355	-.0422	-.1004	
.157								-.1676
.163		.1225						
.177			-.0149					
.229	.0450							
.246		-.0056						
.250				-.0411	-.0640	-.0917	-.1151	
.274			-.0304					
.345								-.1829
.390		-.0227						
.400				-.0768	-.0909		-.1502	
.402			-.0478					
.503								-.2708
.550				-.1696	-.2021			
.565			-.2353					
.600							-.3273	
.637		-.1565						
.650						-.3368		
.670								-.3416
.700					-.3956			
.725				-.3039				
.750						-.7180	-.6191	
.760			-.3057					

AMES 11-073(OA148) -140A/B/C ORB LEFT WING BOT (XE8L70)

ALPHA (3) = 4.000 BETA (3) = .182

SECTION (1)LEFT WING BOT SURF DEPENDENT VARIABLE CP

2Y/BW	.2990	.3640	.4270	.5340	.6730	.7800	.8870	.9720
X/CW								
.775				-.6199	-.5419			
.798		-.3599						
.808			-.7433					
.834	-.3052							
.839		-.5112						
.850				-.4877	-.4239	-.3728		
.857			-.3673					
.862								-.1510
.865	-.5532							
.879		-.3395						
.900	-.3670			-.3599			-.2115	
.905			-.2693					
.919		-.2432						
.950				-.2296	-.2177	-.1080		
.953			-.1660					
.965		-.1421						
.975	-.2149							
1.000			-.0561		-.0341		-.0112	

ALPHA (3) = 4.003 BETA (4) = 4.239 MACH = .59578 Q = 593.03 P = 2386.8 RN/L = 4.8456

SECTION (1)LEFT WING BOT SURF DEPENDENT VARIABLE CP

2Y/BW	.2990	.3540	.4270	.5340	.6730	.7800	.8870	.9720
X/CW								
.010	-.2013	-.1933	.2388	.1682	.1118	.1713	.1677	
.020	.0000	-.0507	.2535	.0677	.0617	.0511	.0507	-.1997
.040		-.0011	.1575					
.050	-.0506			.0236	-.0118	-.0166	-.0308	
.069								-.1945
.080				-.0068				
.081			.0558					
.086		.1197						
.094	-.0143							
.150				-.0139	-.0217	-.0363	-.0845	
.157								-.1898
.163		.1339						
.177			.0093					
.229	.0296							
.246		.0015						
.250				-.0311	-.0551	-.0739	-.1141	
.274			-.0157					
.345								-.2047
.340		-.0105						

AMES 11-073(OA148) -140A/B/C ORB LEFT WING BOT (XE8L70)

ALPHA (3) = 4.003 BETA (4) = 4.239

SECTION (1)LEFT WING BOT SURF DEPENDENT VARIABLE CP

2Y/BW	.2990	.3640	.4270	.5340	.6730	.7800	.8870	.9720
X/CW								
.400				-.0739	-.0858		-.1525	
.402			-.0382					
.503								-.2830
.550				-.1660	-.1885			
.565			-.2440					
.600							-.3221	
.637		-.1507						
.650						-.3323		
.670								-.3170
.700					-.3811			
.725				-.2975				
.750						-.7057	-.6104	
.760			-.3060					
.775				-.5660	-.5105			
.798		-.3531						
.808			-.7269					
.834	-.3051							
.839		-.4911						
.850				-.4650	-.3863	-.3697		
.857			-.3501					
.862								-.1290
.865	- 5642							
.879		-.3458						
.900	-.3678			-.3565			-.1748	
.905			-.2803					
.919		-.2568						
.950				-.2190	-.1801	-.0994		
.953			-.1553					
.955		-.1519						
.965	-.2911							
1.000			-.0670		-.0544		.0033	

ALPHA (3) = 4.009 BETA (5) = 8.292 MACH = .59578 Q = 593.03 P = 2386.8 RN/L = 4.8456

SECTION (1)LEFT WING BOT SURF DEPENDENT VARIABLE CP

2Y/BW	.2990	.3640	.4270	.5340	.6730	.7800	.8870	.9720
X/CW								
.010	-.3773	-.3375	.1142	.2188	.1467	.1779	.1551	
.020	.0000	-.1737	.1894	.1218	.0987	.0861	.0473	-.3042
.040		-.1117	.1613					
.050	-.1256			.0597	.0392	.0092	-.0229	
.059								-.2772
.080				.0259				

DATE 10 FEB 76 TABULATED PRESSURE DATA - OA148 (AMES 11-073-1)

AMES 11-073(OA148) -140A/B/C ORB LEFT WING BOT (XE8L70)

ALPHA (3) = 4.009 BETA (5) = 8.292

SECTION (1)LEFT WING BOT SURF DEPENDENT VARIABLE CP

2Y/BW	.2990	.3640	.4270	.5340	.6730	.7800	.8870	.9720
X/CW								
.091			.0778					
.096		.0596						
.094	-.0740							
.150				-.0065	-.0110	-.0248	-.0877	
.157								-.2284
.163		.1263						
[illegible]			.0227					
[illegible]	.0006							
[illegible]		.0082						
.250				-.0231	-.0489	-.0724	-.1164	
.274			-.0080					
.345								-.2241
.340		-.0138						
.400				-.0783	-.0923		-.1614	
.429			-.0458					
.503								-.2924
.550				-.1616	-.1907			
[illegible]			-.3029					
.601							-.3153	
.637		-.1425						
.650						-.3275		
.670								-.2949
[illegible]					-.3718			
.725				-.2955				
.750						-.6666	-.5868	
.700			-.3136					
.775				-.6392	-.4910			
.799		-.3592						
.809			-.7051					
.834	-.3130							
.929		-.5144						
.850				-.4464	-.3572	-.3519		
.857			-.3681					
[illegible]								-.1103
[illegible]	-.5846							
[illegible]		-.3583						
[illegible]	-.3938			-.2945			-.1564	
[illegible]			-.2630					
[illegible]		-.2686						
[illegible]				-.1728	-.1570	-.1019		
[illegible]			-.1526					
[illegible]		-.1632						
[illegible]	-.3489							
[illegible]			-.0596		-.0442		-.0027	

AMES 11-073(OA148) -140A/B/C ORB LEFT WING BOT (XEBL70)

ALPHA (41) = 7.945 BETA (1) = -7.890 MACH = .59630 Q = 593.97 P = 2386.4 RN/L = 4.8482

SECTION (1)LEFT WING BOT SURF DEPENDENT VARIABLE CP

2Y/BW	.2990	.3640	.4270	.5340	.6730	.7800	.8870	.9720
X/CW								
.010	-.0189	-.0506	.4133	.4394	.4498	.5304	.5140	
.020	.0000	.1111	.4288	.3018	.3665	.3827	.3924	-.1321
.040		.1607	.2963					
.050	.0967			.2011	.2304	.2398	.2515	
.069								-.0707
.080				.1506				
.081			.1817					
.086		.2506						
.094	.1002							
.150				.1187	.1332	.1468	.0988	
.157								-.1363
.163		.2305						
.177			.1160					
.229	.1274							
.246		.0993						
.250				.0848	.0717	.0624	.0325	
.274			.0823					
.345								-.1178
.390		.0709						
.400				.0178	.0098		-.0494	
.402			.0474					
.503								-.2458
.560				-.0945	-.1232			
.565			-.3198					
.600							-.2744	
.637		-.1033						
.650						-.2789		
.670								-.3252
.700					-.3452			
.725				-.2854				
.750						-.7106	-.6436	
.760			-.2780					
.775				-.7711	-.5132			
.798		-.3327						
.809			-.7481					
.814	-.2588							
.829		-.4718						
.850				-.4723	-.4186	-.3379		
.857			-.3530					
.862								-.1941
.865	-.4860							
.873		-.2930						
.900	-.2941			-.2458			-.1759	
.905			-.1956					
.919		-.1712						

AMES 11-073(OA148) -140A/B/C ORB LEFT WING BOT (XEBL70)

ALPHA (4) = 7.945 BETA (1) = -7.890

SECTION (1)LEFT WING BOT SURF DEPENDENT VARIABLE CP

2Y/BW	.2990	.3640	.4270	.5340	.6730	.7800	.8870	.9720
X/CW								
.950				-.0997	-.2764	-.0866		
.953			-.0846					
.955		-.0833						
.965	-.0668							
1.000			.0013		.0136		-.0077	

ALPHA (4) = 7.955 BETA (2) = -3.860 MACH = .59630 Q = 593.97 P = 2386.4 RN/L = 4.8482

SECTION (1)LEFT WING BOT SURF DEPENDENT VARIABLE CP

2Y/BW	.2990	.3640	.4270	.5340	.6730	.7800	.8870	.9720
X/CW								
.010	-.1702	-.2581	.2948	.4382	.4367	.4925	.4568	
.020	.0000	-.0209	.3782	.3250	.3630	.3739	.3691	-.2949
.040		.0531	.3052					
.050	.0329			.2220	.2336	.2427	.2465	
.069								-.1929
.080				.1617				
.081			.1960					
.096		.2093						
.094	.0621							
.150				.1223	.1322	.1379	.0831	
.157								-.1842
.163		.2416						
.177			.1219					
.229	.1085							
.245		.1112						
.250				.0844	.0688	.0543	.0130	
.274			.0863					
.345								-.1621
.330		.0763						
.400				.0180	.0027		-.0668	
.402			.0470					
[illegible]								-.2829
[illegible]				-.1004	-.1311			
[illegible]			-.2674					
[illegible]							-.2878	
[illegible]		-.0923						
[illegible]						-.2043		
[illegible]								-.3369
[illegible]					-.3561			
[illegible]				-.2926				
[illegible]						-.7125	-.6450	
[illegible]			-.2651					

AMES 11-073(OA148) -140A/B/C ORB LEFT WING BOT (XE8L70)

ALPHA (4) = 7.955 BETA (2) = -3.860

SECTION (1)LEFT WING BOT SURF DEPENDENT VARIABLE CP

2Y/BW	.2990	.3540	.4270	.5340	.6730	.7800	.8870	.9720
X/CW								
.775				-.7734	-.5173			
.798		-.3358						
.808			-.7727					
.834	-.2729							
.839		-.4891						
.850				-.4782	-.4167	-.3564		
.857			-.3520					
.862							-.1881	
.865	-.5103							
.879		-.3050						
.900	-.3233			-.2696		-.1882		
.905			-.2089					
.919		-.2024						
.930				-.1120	-.2223	-.0939		
.953			-.0959					
.955		-.1133						
.955	-.1422							
1.000			-.0144		.0067		-.0218	

ALPHA (4) = 7.955 BETA (3) = .181 MACH = .59630 Q = 593.97 P = 2386.4 RN/L = 4.8482

SECTION (1)LEFT WING BOT SURF DEPENDENT VARIABLE CP

2Y/BW	.2990	.3540	.4270	.5340	.6730	.7800	.8870	.9720
X/CW								
.010	-.3502	-.5010	.1568	.4252	.4004	.4249	.3884	
.020	.0000	-.1815	.2930	.3282	.3465	.3469	.3228	-.4567
.040		-.0833	.2861					
.050	-.0569			.2259	.2280	.2269	.2078	
.069								-.3059
.080				.1692				
.081			.1974					
.086		.1464						
.094	.0015							
.150				.1185	.1280	.1163	.0548	
.157								-.2232
.163		.2272						
.177			.1222					
.229	.0793							
.246		.1032						
.250				.0738	.0618	.0423	-.0115	
.274			.0785					
.345								-.2183
.341		.0718						

AMES 11-073(OA148) -140A/B/C ORB LEFT WING BOT (XE8L70)

ALPHA (4) = 7.955 BETA (3) = .181

SECTION (1)LEFT WING BOT SURF DEPENDENT VARIABLE CP

Z/BW	.2990	.3640	.4270	.5340	.6730	.7800	.8870	.9720
X/CW								
.400				.0083	-.0080		-.0919	
.402			.0358					
.503								-.3151
.550				-.1069	-.1370			
.565			-.2521					
.600							-.2974	
.637		-.0951						
.650						-.2979		
.670								-.3473
.700					-.3499			
.725				-.2978				
.750						-.7092	-.6369	
.760			-.3003					
.775				-.8196	-.4899			
.795		-.3452						
.809			-.7863					
.814	-.2785							
.833		-.5150						
.850				-.4656	-.4248	-.3716		
.857			-.3684					
.862								-.1728
.865	-.5440							
.879		-.3345						
.900	-.3536			-.2546			-.1831	
.907			-.2348					
.919		-.2401						
.950				-.1164	-.1922	-.1050		
.953			-.1169					
.955		-.1412						
.970	-.2323							
1.000			-.0244		.0091		-.0352	

ALPHA (4) = 7.955 BETA (4) = 4.234 MACH = .59630 Q = 593.97 P = 2386.4 PN/L = 4.8482

SECTION (1)LEFT WING BOT SURF DEPENDENT VARIABLE CP

Z/BW	.2990	.3640	.4270	.5340	.6730	.7800	.8870	.9720
Y/CW								
.010	-.5257	-.6355	-.0190	.3750	.3603	.3480	.3047	
.020	.0000	-.3062	.1728	.3172	.3220	.3179	.2826	-.6636
.040		-.2145	.2453					
.060	-.1405			.2228	.2366	.2151	.1977	
.080								-.4749
.090				.1697				

AMES 11-073(OA148) -140A/B/C ORB LEFT WING BOT (XEBL70)

ALPHA (4) = 7.955 BETA (4) = 4.234

SECTION (1) LEFT WING BOT SURF DEPENDENT VARIABLE CP

Y/BW	.2990	.3640	.4270	.5340	.6730	.7800	.8870	.9720
X/CW								
.081			.1842					
.086		.0679						
.094	-.0620							
.150				.1110	.1187	.1152	.0388	
.157								-.2815
.163		.1973						
.177			.1174					
.223	.0346							
.245		.0926						
.250				.0631	.0513	.0377	-.0273	
.274			.0748					
.345								-.2744
.390		.0681						
.400				.0005	-.0137		-.1053	
.402			.0317					
.503								-.3515
.550				-.1090	- 1381			
.565			-.2789					
.600							-.3013	
.637		-.0931						
.650						-.2969		
.670								-.3644
.700					-.3328			
.725				-.2977				
.750						-.6831	-.6381	
.760			-.3080					
.775				-.8270	-.4340			
.799		-.3454						
.808			-.7826					
.834	-.2878							
.839		-.5218						
.850				-.4510	-.3976	-.3640		
.857			-.3589					
.862								-.1813
.865	-.5670							
.879		-.3507						
.900	-.3673			-.2330			-.1827	
.905			-.2457					
.919		-.2611						
.950				-.1237	-.2015	-.1124		
.953			-.1266					
.955		-.1520						
.946	-.3024							
1.000			-.0276		-.0313		-.0254	

AMES 11-073(OA148) -140A/B/C ORB LEFT WING BOT (XEBL70)

ALPHA (4) = 7.954 BETA (5) = 8.280 MACH = .59630 Q = 593.97 P = 2386.4 RN = 4.8482

SECTION (1)LEFT WING BOT SURF DEPENDENT VARIABLE CP

Z/BW	.2930	.3640	.4270	.5340	.6730	.7800	.8870	.9720
X/CW								
.010	-.7309	-.6220	-.2318	.2945	.2899	.2418	.2060	
.020	.0000	-.4104	.0200	.2808	.2765	.2716	.2182	-.8800
.040		-.3128	.1833					
.050	-.2580			.2188	.2153	.1930	.1577	
.069								-.6062
.080				.1604				
.081			.1619					
.086		-.0093						
.094	-.1429							
.150				.1011	.1111	.1020	.0125	
.157								-.3449
.163		.1577						
.177			.1143					
.229	-.0059							
.246		.0729						
.250				.0563	.0400	.0220	-.0474	
.274			.0738					
.345								-.3467
.330		.0620						
.400				-.0065	-.0193		-.1229	
.402			.0233					
.503								-.3882
.550				-.1179	-.1450			
.565			-.3016					
.600							-.3094	
.637		-.1021						
.650						-.3071		
.670								-.3574
.700					-.3474			
.725				-.3129				
.750						-.6680	-.6251	
.760			-.3151					
.775				-.8050	-.4707			
.798		-.3522						
.808			-.7645					
.834	-.2972							
.830		-.5258						
.850				-.4395	-.3351	-.3567		
.857			-.3854					
.862								-.1628
.865	-.5768							
.879		-.3544						
.900	-.3904			-.2419			-.1783	
.905			-.2485					
.919		-.2758						

AMES 11-073(OA148) -140A/B/C ORB LEFT WING BOT (XEBL70)

ALPHA (4) = 7.954 BETA (5) = 8.280

SECTION (1)LEFT WING BOT SURF DEPENDENT VARIABLE CP

2Y/BW	.2990	.3540	.4270	.5340	.6730	.7800	.8870	.9720
X/CW								
.950				-.1271	-.1582	-.0971		
.953			-.1283					
.955		-.1707						
.965	-.3640							
1.000			-.0300		-.0348		-.0209	

ALPHA (5) = 11.925 BETA (1) = -7.848 MACH = .59594 Q = 593.15 P = 2386.7 RN/L = 4.8434

SECTION (1)LEFT WING BOT SURF DEPENDENT VARIABLE CP

2Y/BW	.2990	.3540	.4270	.5340	.6730	.7800	.8870	.9720
X/CW								
.010	-.2950	-.6092	.1769	.5117	.5129	.5475	.3685	
.020	.0000	-.1373	.3942	.5074	.5749	.5069	.5347	-.8482
.040		-.0166	.4444					
.050	-.0491			.4114	.4567	.4291	.4486	
.069								-.4830
.090				.3400				
.081			.3526					
.086		.2686						
.094	.1241							
.150				.2599	.2807	.2827	.2042	
.157								-.2520
.163		.3581						
.177			.2573					
.229	.1920							
.246		.2371						
.250				.2113	.1877	.1708	.1115	
.274			.1990					
.345								-.1249
.390		.1818						
.400				.1181	.0916		-.0019	
.402			.1459					
.503								-.3105
.555				-.0265	-.0608			
.570			-.3057					
.600							-.2530	
.637		-.0249						
.670						-.2418		
.700								-.3820
.720					-.2909			
.750				-.2555				
.770						-.6832	-.6341	
.780			-.2525					

AMES 11-073(OA148) -140A/B/C ORB LEFT WING BOT (XEBL70)

ALPHA (5) = 11.925 BETA (1) = -7.848

SECTION (1)LEFT WING BOT SURF DEPENDENT VARIABLE CP

2Y/BW	.2990	.3640	.4270	.5340	.6730	.7800	.8870	.9720
X/CW								
.775				-.8619	-.4257			
.798		-.3018						
.808			-.7531					
.834	-.2277							
.839		-.4396						
.850				-.4233	-.4009	-.3608		
.857			-.3142					
.862								-.2737
.865	-.4533							
.879		-.2722						
.900	-.2622			-.2151			-.2267	
.905			-.1713					
.919		-.1709						
.950				-.0886	-.2273	-.0989		
.953			-.0722					
.955		-.0812						
.965	-.0808							
1.000			.0136		-.0253		-.0393	

ALPHA (5) = 11.942 BETA (2) = -3.851 MACH = .59584 Q = 593.15 P = 2396.7 RN/L = 4.8434

SECTION (1)LEFT WING BOT SURF DEPENDENT VARIABLE CP

2Y/BW	.2990	.3640	.4270	.5340	.6730	.7800	.8870	.9720
X/CW								
.010	-.5264	-.8654	-.0445	.5074	.5120	.4226	.3720	
.020	.0000	-.3091	.2505	.5031	.5203	.5072	.4498	-.8385
.040		-.1792	.3921					
.040	-.0475			.4074	.4455	.4292	.3069	
.049								-.4897
.080				.3343				
.081			.3305					
.085		.1820						
.094	.0484							
.100				.2565	.2790	.2838	.2040	
.150								-.2507
.163		.3256						
.177			.2467					
.229	.1474							
.245		.2168						
.250				.1972	.1888	.1728	.1125	
.274			.1906					
.345								-.2010
.390		.1751						

DATE 10 FEB 78 TABULATED PRESSURE DATA - OA148 (AMES 11-073-1)

AMES 11-073(OA148) -140A/B/C ORB LEFT WING BOT (XEBL70)

ALPHA (5) = 11.942 BETA (2) = -3.851

SECTION (1)LEFT WING BOT SURF DEPENDENT VARIABLE CP

2Y/BW	.2990	.3640	.4270	.5340	.6730	.7800	.8870	.9720
X/CW								
.400				.1042	.0927		.0031	
.402			.1320					-.3131
.503								
.550				-.0271	-.0613			
.605			-.2851					
.600							-.2536	
.637		-.0287						
.660						-.2471		
.670								-.3790
.700					-.2937			
.725				-.2554				
.750						-.6795	-.6361	
.760			-.2701					
.775				-.8472	-.4283			
.779		-.3040						
.818			-.7782					
.834	-.2381							
.839		-.4761						
.850				-.4209	-.4052	-.3614		
.857			-.3413					
.862								-.2735
.865	-.4895							
.879		-.3102						
.900	-.3024			-.2192			-.2244	
.905			-.2099					
.919		-.2126						
.950				-.0915	-.2311	-.0984		
.953			-.0967					
.955		-.1165						
.965	-.1631							
1.000			-.0096		-.0226		-.0425	

ALPHA (5) = 11.942 BETA (3) = .182 MACH = .59584 Q = 593.15 P = 2385.7 RN / = 4.8434

SECTION (1)LEFT WING BOT SURF DEPENDENT VARIABLE CP

2Y/BW	.2990	.3640	.4270	.5340	.6730	.7800	.8870	.9720
X/CW								
.400	-.7475	-1.0439	-.2707	.4019	.4101	.2836	.2357	
.402	[illegible]	[illegible]	[illegible]	.4426	.4459	.4249	[illegible]	-1.0565
.503		[illegible]	[illegible]					
.550	-.1849			.3832	.4070	.3833	.3373	
.605								-.6549
.600								
.637				.3194				

AMES [illegible]3(OA148) -140A/B/C [illegible]B LEFT WING BO[illegible] (XEBL70)

ALPHA (5) = 11.947 BETA (3) = [illegible]

SECTION : 1)LEFT WING BOT SURF [illegible] VARIABLE CP

2Y/BW	.2990	.3640	.4270	.5340	[illegible]	[illegible]7800	.8870	.9720
X/CW								
.081			.3053					
.086		.0888						
.094	-.0379							
.150				.2[illegible]		.2561	.1587	
.157								-.3142
.163		.2838						
.177			.2326					
.229	.0974							
.246		.1959						
.250				.1779	.1698	.1541	.0790	
.274			.1770					
.345								-.2645
.390		.1651						
.400				.0899	.0782		-.0262	
.402			.1191					
.503								-.3467
.550				-.0407	-.0711			
.555			-.2784					
.600							-.2687	
.637		-.0313						
.650						-.2598		
.672								-.3854
.700					-.3126			
.725				-.2692				
.750						-.6796	-.6439	
.760			-.2829					
.775				-.8927	-.4554			
.798		-.3161						
.808			-.7875					
.834	-.2529							
.839		-.5028						
.850				-.4264	-.3647	-.3745		
.857			-.3654					
.862								-.2579
.865	-.5227							
.879		-.3264						
.900	-.3322			-.2193			-.2199	
.905			-.2411					
.919		-.2417						
.950				-.0985	-.2038	-.1145		
.953			-.1190					
.955		-.1422						
.945	-.2624							
1.000			-.0078		-.0299		-.0322	

C-5

AMES 11-073(OA148) -140A/B/C ORB LEFT WING BOT (XE8L70)

ALPHA (5) = 11.942 BETA (4) = 4.245 MACH = .59584 Q = 593.15 P = 2386.7 RN/L = 4.8434

SECTION (1)LEFT WING BOT SURF DEPENDENT VARIABLE CP

Z/W	.2900	.3640	.4270	.5340	.6730	.7800	.8870	.9720
X/CW								
.010	-.9559	-.9698	-.4762	.2819	.2861	.1232	.0714	
.020	.0000	-.5912	-.0701	.3622	.3625	.3276	.2486	-1.2596
.040		-.4475	.2336					
.050	-.2780			.3346	.3549	.3288	.2761	
.069								-.8038
.080				.2840				
.081			.2592					
.086		-.0027						
.094	-.1313							
.150				.2144	.2342	.2242	.1255	
.157								-.3552
.163		.2330						
.177			.2082					
.229	.0495							
.246		.1640						
.250				.1608	.1476	.1269	.0523	
.274			.1650					
.345								-.3051
.390		.1474						
.400				.0766	.0575		-.0549	
.402			.1016					
.503								-.3565
.550				-.0470	-.0883			
.555			-.2762					
.600							-.2849	
.637		-.0381						
.650						-.2807		
.670								-.3694
.700					-.3280			
.725				-.2904				
.750						-.6680	-.6384	
.760			-.2986					
.775				-.8878	-.4642			
.798		-.3192						
.808			-.7714					
.834	-.2675							
.839		-.5143						
.850				-.4432	-.3520	-.3780		
.857			-.3822					
.862								-.2423
.865	-.5349							
.873		-.3494						
.900	-.3617			-.2510			-.2340	
.905			-.2499					
.919		-.2692						

AMES 11-073(OA148) -140A/B/C ORB LEFT WING BOT (XEBL70)

ALPHA (5) = 11.942 BETA (4) = 4.245

SECTION (1)LEFT WING BOT SURF DEPENDENT VARIABLE CP

2Y/BW	.2990	.3640	.4270	.5340	.6730	.7800	.8870	.9720
X/CW								
.950				-.1265	-.1930	-.1291		
.953			-.1224					
.955		-.1620						
.965	-.3377							
1.000			.0006		-.0267		-.0622	

ALPHA (5) = 11.935 BETA (5) = 8.309 MACH = .59584 Q = 593.15 P = 2386.7 RN/L = 4.8434

SECTION (1)LEFT WING BOT SURF DEPENDENT VARIABLE CP

2Y/BW	.2990	.3640	.4270	.5340	.6730	.7800	.8870	.9720
X/CW								
.010	-1.1956	-.7201	-.7038	.1158	.1379	-.0846	-.1060	
.020	.0000	-.6280	-.2649	.2646	.2546	.2156	.1245	-1.4133
.040		-.5118	.1295					
.050	-.4105			.2853	.2953	.2640	.2013	
.069								-.9318
.080				.2441				
.081			.2133					
.086		-.0920						
.094	-.2321							
.150				.1869	.2061	.1958	.0911	
.157								-.3958
.163		.1719						
.177			.1921					
.229	-.0126							
.246		.1281						
.250				.1373	.1297	.1090	.0217	
.274			.1519					
.345								-.3461
.390		.1281						
.400				.0615	.0451		-.0727	
.402			.0862					
.503								-.3669
.550				-.0549	-.0910			
.565			-.3182					
.600							-.2820	
.637		-.0494						
.650						-.2799		
.670								-.3464
.700					-.3214			
.725				-.2825				
.750						-.6345	-.6215	
.760			-.3051					

DATE 10 FEB 76

TABULATED PRESSURE DATA - OA148 (AMES 11-073-1)

AMES 11-073(OA148) -140A/B/C ORB LEFT WING BOT (XEBL70)

ALPHA (5) = 11.935 BETA (5) = 8.309

SECTION (1)LEFT WING BOT SURF DEPENDENT VARIABLE CP

2Y/BW	.2990	.3640	.4270	.5340	.6730	.7800	.8870	.9720
X/CW								
.775								
.798		-.3192		-.8932	-.4408			
.808								
.834	-.2683		-.7588					
.839		-.5156						
.850								
.857				-.4106	-.3371	-.3790		
.862			-.3843					
.865	-.5524							-.2261
.879		-.3603						
.900	-.3809							
.905				-.2477				
.919			-.2530				-.2288	
.950		-.2743						
.953				-.1431	-.1886	-.1447		
.955			-.1217					
.965		-.1719						
1.000	-.4003							
			-.0123		-.0626		-.0582	

AMES 11-073(OA148) -140A/B/C ORB LEFT WING BOT (XE8L71) (05 AUG 75)

REFERENCE DATA

SREF = 2690.0000 SQ.FT. XMRP = 1076.6800 IN. XO
LREF = 474.8000 IN. YMRP = .0000 IN. YO
BREF = 936.0680 IN. ZMRP = 375.0000 IN. ZO
SCALE = .0300

PARAMETRIC DATA

RUDDER = -5.000 SPDBRK = 55.000
BDFLAP = 16.300 L-ELVN = -10.000
R-ELVN = -10.000 MACH = 1.400

ALPHA (I) = -3.946 BETA (I) = -3.857 MACH = 1.3971 Q = 600.47 P = 439.47 RN/L = 2.9096

SECTION (1)LEFT WING BOT SURF DEPENDENT VARIABLE CP

2Y/BW	.2990	.3640	.4270	.5340	.6730	.7800	.8870	.9720
X/CW								
.010	-.1722	-.2397	-.1326	-.2677	-.3552	-.2161	-.1869	
.020	.0000	-.2319	-.2391	-.4076	-.3965	-.4080	-.4015	-.4513
.040		-.2229	-.2970					
.050	-.1526			-.4410	-.4267	-.4406	-.4334	
.069								-.4863
.080				-.4389				
.081			-.1898					
.086		-.1191						
.094	-.1437							
.150				-.3966	-.3875	-.3897	-.3943	
.157								-.2882
.163		-.0289						
.177			-.1680					
.229	-.1052							
.246		-.1098						
.250				-.2082	-.3575	-.3505	-.3648	
.274			-.1623					
.345								-.4158
.390		-.1414						
.400				-.1728	-.3066		-.3258	
.402			-.1492					
.503								-.3516
.550				-.1360	-.1508			
.565			-.2861					
.600							-.3110	
.637		-.0932						
.650						-.3110		
.670								-.5305
.700					-.1970			
.725				-.1712				
.750						-.4168	-.5298	
.760			-.1364					
.775				-.3761	-.3361			
.799		-.1175						
.808			-.4739					
.834	-.1668							
.833		-.4076						
.850				-.4733	-.4144	-.4669		

AMES 11-073(OA148) -140A/B/C ORB LEFT WING BOT (XEBL71)

ALPHA (1) = -3.946 BETA (1) = -3.857

SECTION (1)LEFT WING BOT SURF DEPENDENT VARIABLE CP

2Y/BW	.2990	.3640	.4270	.5340	.6730	.7800	.8870	.9720
X/CW								
.857			-.4421					
.862								-.6018
.865	-.4182							
.879		-.4299						
.900	-.3053			-.4165			-.4002	
.905			-.3451					
.919		-.3635						
.950				-.2843	-.4082	-.3091		
.953			-.3005					
.955		-.2277						
.965	-.3958							
1.000			-.2021		-.2003		-.3110	

ALPHA (1) = -3.940 BETA (2) = .190 MACH = 1.3971 Q = 600.47 P = 439.47 RN/L = 2.9096

SECTION (1)LEFT WING BOT SURF DEPENDENT VARIABLE CP

2Y/BW	.2990	.3640	.4270	.5340	.6730	.7800	.8870	.9720
X/CW								
.010	-.0975	-.1134	-.0522	-.2707	-.3748	-.2596	-.2398	
.020	.0000	-.1131	-.1182	-.4062	-.4140	-.4357	-.4356	-.4979
.040		-.1126	-.1723					
.050	-.1033			-.4277	-.4411	-.4657	-.4651	
.063								-.5112
.080				-.3895				
.081			-.1495					
.086		-.0526						
.094	-.0916							
.150				-.3054	-.3946	-.4103	-.4214	
.157								-.3089
.163		.0187						
.177			-.1296					
.229	-.0698							
.246		-.0735						
.250				-.1566	-.3544	-.3708	-.3914	
.274			-.1272					
.345								-.4670
.330		-.0996						
.400				-.1425	-.1525		-.3451	
.422			-.1180					
.500								-.3615
.550				-.1057	-.1370			
.555			-.3161					
.600							-.3208	

AMES 11-073(OA148) -140A/B/C ORB LEFT WING BOT (XEBL71)

ALPHA (1) = -3.940 BETA (2) = .190

SECTION (1)LEFT WING BOT SURF DEPENDENT VARIABLE CP

2Y/BW	.2990	.3640	.4270	.5340	.6730	.7800	.8870	.9720
X/CW								
.637		-.0761						
.650						-.1765		
.670								-.5426
.700					-.1629			
.725				-.1537				
.750						-.3791	-.5241	
.760			-.1123					
.775				-.3753	-.3133			
.798		-.1074						
.808			-.4706					
.834	-.1380							
.839		-.3984						
.850				-.4725	-.4054	-.4754		
.857			-.4449					
[illegible]								-.6173
.865	-.3894							
.879		-.4154						
.900	-.3096			-.4837			-.4226	
.905			-.4480					
.919		-.4081						
.950				-.3020	-.5148	-.2586		
.953			-.3087					
.955		-.2961						
.955	-.4393							
1.000			-.2238		-.2203		-.2804	

ALPHA (1) = -3.946 BETA (3) = 4.272 MACH = 1.3971 Q = 600.47 P = 439.47 RN/L = 2.9096

SECTION (1)LEFT WING BOT SURF DEPENDENT VARIABLE CP

2Y/BW	.2990	.3640	.4270	.5340	.6730	.7800	.8870	.9720
X/CW								
.010	-.0757	-.0295	.0482	-.2621	-.3824	-.2950	-.2745	
.020	.0000	-.0452	.0145	-.3880	-.4231	-.4532	-.4586	-.5218
.040		-.0391	-.0715					
.050	-.0749			-.3475	-.4441	-.4784	-.4857	
.069								-.5196
.080				-.3332				
[illegible]			-.0941					
[illegible]		-.0034						
[illegible]	-.0872							
[illegible]				-.1784	-.3797	-.4169	-.4365	
.157								-.3129
.163		.0513						

AMES 11-073(OA148) -140A/B/C ORB LEFT WING BOT (XEBL71)

ALPHA (1) = -3.946 BETA (3) = 4.272

SECTION (1)LEFT WING BOT SURF DEPENDENT VARIABLE CP

2Y/BW	.2990	.3640	.4270	.5340	.6730	.7800	.8870	.9720
X/CW								
.177			-.0960					
.229	-.0527							
.246		-.0421						
.250				-.1317	-.1755	-.3617	-.4027	
.274			-.0891					
.345								-.3912
.390		-.0624						
.400				-.1050	-.1276		-.3505	
.402			-.0827					
.503								-.3317
.550				-.0873	-.1005			
.565			-.3125					
.600							-.1559	
.637		-.0612						
.650						-.1468		
.670								-.5058
.700					-.1422			
.725				-.1404				
.750						-.3584	-.4434	
.760			-.1072					
.775				-.3690	-.2989			
.798		-.1037						
.808			-.4643					
.834	-.1569							
.839		-.3905						
.850				-.4642	-.3971	-.4651		
.857			-.4413					
.862								-.5039
.865	-.4004							
.879		-.3976						
.900	-.3133			-.4766			-.2855	
.905			-.4375					
.919		-.3957						
.950				-.3024	-.4774	-.2585		
.953			-.2992					
.955		-.3625						
.965	-.4725							
1.000			-.2243		-.2094		-.2131	

AMES 11-073(OA148) -140A/B/C ORB LEFT WING BOT (XEBL71)

ALPHA (2) = .016 BETA (1) = -3.873 MACH = 1.3971 Q = 600.47 P = 439.47 RN/L = 2.9088

SECTION (1)LEFT WING BOT SURF DEPENDENT VARIABLE CP

2Y/BW	.2990	.3640	.4270	.5340	.6730	.7800	.8870	.9720
X/CW								
.010	-.0024	.0142	.2136	-.0853	-.1793	-.1075	-.0206	
.020	.0000	-.0160	.1550	-.2195	-.2274	-.2390	-.2567	-.2173
.040		-.0183	.0139					
.050	-.0277			-.2209	-.2360	-.2704	-.2750	
.069								-.2439
.080				-.1772				
.081			-.0373					
.086		.0266						
.094	-.0476							
.150				-.1230	-.1817	-.2003	-.2223	
.157								-.1797
.163		.0980						
.177			-.0423					
.229	-.0415							
.246		-.0167						
.250				-.0602	-.1365	-.1570	-.1904	
.274			-.0464					
.345								-.1702
.390		-.0347						
.400				-.0607	-.0473		-.1469	
.402			-.0459					
.503								-.1631
.550				-.0369	-.0462			
.565			-.3433					
.600							-.1145	
.637		-.0236						
.650						-.0881		
.670								-.3935
.700					-.1097			
.725				-.0987				
.750						-.3541	-.3850	
.760			-.1090					
.775				-.3285	-.3197			
.798		-.0940						
.808			-.4143					
.834	-.1301							
.839		-.3874						
.850				-.4448	-.3606	-.4463		
.857			-.4162					
.862								-.4088
.865	-.3852							
.879		-.4111						
.900	-.2768			-.4673			-.4590	
.905			-.4463					
.919		-.3660						

AMES 11-073(OA148) -140A/B/C ORB LEFT WING BOT (XE8L71)

ALPHA (2) = .016 BETA (1) = -3.873

SECTION (1)LEFT WING BOT SURF DEPENDENT VARIABLE CP

2Y/BW	.2990	.3640	.4270	.5340	.6730	.7800	.8870	.9720
X/CW								
.950				-.2615	-.3649	-.3546		
.953			-.2371					
.955		-.2112						
.965	-.3802							
1.000			-.1749		-.2160		-.2913	

ALPHA (2) = .022 BETA (2) = .180 MACH = 1.3971 Q = 600.47 P = 439.47 RN/L = 2.9088

SECTION (1)LEFT WING BOT SURF DEPENDENT VARIABLE CP

2Y/BW	.2990	.3640	.4270	.5340	.6730	.7800	.8870	.9720
X/CW								
.010	-.0100	.0033	.2488	-.0787	-.1969	-.1406	-.0662	
.020	.0000	-.0041	.2243	-.1858	-.2313	-.2550	-.2840	-.2479
.040		.0054	.0732					
.060	-.0232			-.1088	-.1899	-.2676	-.2980	
.069								-.2607
.090				-.1064				
.091			.0093					
.086		.0480						
.094	-.0412							
.150				-.0770	-.1336	-.1762	-.2183	
.157								-.1788
.163		.1194						
.177			-.0136					
.229	-.0403							
.246		.0152						
.250				-.0346	-.0531	-.1140	-.1897	
.274			-.0152					
.345								-.1294
.380		-.0065						
.400				-.0341	-.0367		-.0651	
.402			-.0235					
.503								-.0809
.550				-.0190	-.0281			
.555			-.3831					
[illegible]							-.0765	
.637		-.0062						
.650						-.0705		
.670								-.3752
[illegible]					-.0886			
.705				-.0874				
[illegible]						-.3474	-.3858	
[illegible]			-.0931					

AMES 11-073(OA148) -140A/B/C ORB LEFT WING BOT (XEBL71)

ALPHA (2) = .022 BETA (2) = .180

SECTION (1)LEFT WING BOT SURF DEPENDENT VARIABLE CP

2Y/BW	.2990	.3640	.4270	.5340	.6730	.7800	.8870	.9720
X/CW								
.775				-.3286	-.3207			
.798		-.0938						
.808			-.4066					
.834	-.1153							
.839		-.3793						
.850				-.4383	-.3466	-.4386		
.857			-.4111					
.862								-.3790
.865	-.3726							
.879		-.3938						
.900	- 2526			-.4638			-.4662	
.905			-.4624					
.919		-.3660						
.950				-.2671	-.3843	-.2707		
.953			-.2571					
.955		-.2886						
.965	-.4091							
1.000			-.1861		-.2061		-.2483	

ALPHA (2) = .018 BETA (3) = 4.248 MACH = 1.3971 Q = 600.47 P = 439.47 RN/L = 2.9088

SECTION (1)LEFT WING BOT SURF DEPENDENT VARIABLE CP

2Y/BW	.2990	.3640	.4270	.5340	.6730	.7800	.8870	.9720
X/CW								
.010	-.0750	-.0622	.2664	-.0213	-.1728	-.1603	-.0919	
.020	.0000	-.0348	.2527	-.0139	-.1160	-.2445	-.2940	-.1913
.040		-.0191	.1172					
.050	-.0537			-.0739	-.1843	-.2319	-.2862	
.069								-.1825
.080				-.0562				
.081			.0424					
.085		.0430						
.094	-.0541							
.150				-.0392	-.0772	-.1336	-.2011	
.157								-.1546
.163		.1167						
.177			.0084					
.229	-.0515							
.246		.0237						
.250				-.0163	-.0408	-.0431	-.0706	
.274			.0120					
.345								-.0677
.390		.0132						

AMES 11-073(OA148) -140A/B/C ORB LEFT WING BOT (XEBL71)

ALPHA (2) = .018 BETA (3) = 4.248

SECTION (1)LEFT WING BOT SURF DEPENDENT VARIABLE CP

2Y/Bw	.2990	.3640	.4270	.5340	.6730	.7800	.8870	.9720
X/Cw								
.400				-.0075	-.0140		-.0546	
.402			-.0004					
.503								-.0847
.550				-.0064	-.0101			
.565			-.3404					
.600							-.0622	
.637		.0049						
.650						-.0562		
.670								-.3980
.700					-.0760			
.725				-.0769				
.750						-.3415	-.3766	
.760			-.0930					
.775				-.3258	-.3261			
.798		-.0822						
.808			-.4112					
.824	-.1103							
.839		-.3650						
.850				-.4293	-.3323	-.4277		
.857			-.4102					
.852								-.3587
.855	-.3693							
.879		-.3693						
.900	-.2536			-.4612			-.4492	
.905			-.4461					
.919		-.3548						
.950				-.2639	-.3890	-.2453		
.953			-.2570					
.955		-.3486						
.965	-.4414							
1.000			-.1862		-.1987		-.2097	

ALPHA (3) = 3.951 BETA (1) = -3.877 MACH = 1.3961 Q = 600.56 P = 440.18 RN/L = 2.9092

SECTION (1)LEFT WING BOT SURF DEPENDENT VARIABLE CP

2Y/Bw	.2990	.3640	.4270	.5340	.6730	.7800	.8870	.9720
X/Cw								
.010	.0539	.0154	.4011	.2540	.1839	.1817	.2123	
.070	.0000	.0383	.3799	.1770	.1683	.0903	.0391	.0882
[illegible]		.0008	.2085					
[illegible]	.0204			.0534	.0210	.0228	.0307	
[illegible]								.0556
.080				.0530				

AMES 11-073(OA148) -140A/B/C ORB LEFT WING BOT (XEBL71)

ALPHA (3) = 3.951 BETA (1) = -3.877

SECTION (1)LEFT WING BOT SURF DEPENDENT VARIABLE CP

2Y/BW	.2990	.3640	.4270	.5340	.6730	.7800	.8870	.9720
X/CW								
.081			.1258					
.086		.1068						
.094	.0285							
.150				.0503	.0618	.0682	.0822	
.157								-.0626
.163		.1987						
.177			.0864					
.229	.0235							
.246		.0793						
.250				.0761	.0735	.0860	.0677	
.274			.0724					
.345								.0329
.390		.0714						
.400				.0690	.0806		.0606	
.402			.0655					
.503								.0050
.550				.0728	.0870			
.565			-.4005					
.600							.0111	
.637		0612						
.650						.0244		
.675								-.3598
.700					-.0154			
.725				-.0128				
.750						-.3017	-.3210	
.760			-.0507					
.775				-.3104	-.3354			
.798		-.0546						
.808			-.3519					
.834	-.0732							
.839		-.3542						
.850				-.4024	-.2990	-.3952		
.857			-.3830					
.862								-.3412
.855	-.3424							
.875		-.3898						
.900	-.2060			-.4378			-.4335	
.905			-.4461					
.919		-.3279						
.950				-.2821	-.3808	-.4589		
.953			-.2283					
.955		-.2441						
.965	-.3523							
1.000			-.1593		-.2379		-.3669	

AMES 11-073(OA148) -140A/B/C ORB LEFT WING BOT (XEBL71)

ALPHA (3) = 3.952 BETA (2) = .179 MACH = 1.3961 Q = 600.56 P = 440.18 RN/L = 2.9092

SECTION (1)LEFT WING BOT SURF DEPENDENT VARIABLE CP

2Y/BW	.2990	.3640	.4270	.5340	.6730	.7800	.8870	.9720
X/CW								
.010	-.0288	-.1454	.3513	.3001	.1986	.1844	.1991	
.020	.0000	-.0553	.3558	.2211	.1753	.1076	.0491	.0599
.040		-.0268	.2289					
.050	.0161			.1045	.0560	.0879	.0467	
.069								.0380
.080				.0959				
.081			.1452					
.086		.0669						
.094	.0072							
.150				.0752	.0804	.0929	.1047	
.157								.0749
.163		.1813						
.177			.0943					
.229	.0060							
.246		.0928						
.250				.0900	.0847	.0950	.0704	
.274			.0943					
.345								.0133
.390		.0833						
.400				.0883	.0942		.0626	
.402			.0729					
.503								-.0188
.550				.0772	.0892			
.565			-.4132					
.600							.0159	
.637		.0736						
.650						.0255		
.670								.3853
.700					-.0165			
.725				-.0092				
.750						-.3060	-.3214	
.760			-.0398					
.775				-.3066	-.3314			
.798		-.0504						
.808			-.3407					
.834	-.0583							
.839		-.3400						
.850				-.3964	-.2928	-.3987		
.857			-.3766					
.862								-.3867
.865	-.3312							
.879		-.3804						
.890	-.1882			-.4321			-.4495	
.905			-.4301					
.919		-.3077						

AMES 11-073(OA148) -140A/B/C ORB LEFT WING BOT (XEBL71)

ALPHA (3) = 3.952 BETA (2) = .179

SECTION (1)LEFT WING BOT SURF DEPENDENT VARIABLE CP

2Y/BW	.2990	.3640	.4270	.5340	.6730	.7800	.8870	.9720
X/CW								
.950				-.2740	-.3800	-.4591		
.953			-.2271					
.955		-.3193						
.965	-.3848							
1.000			-.1608		-.2102		-.3478	

ALPHA (3) = 3.956 BETA (3) = 4.242 MACH = 1.3961 Q = 600.56 P = 440.18 RN/L = 2.9092

SECTION (1)LEFT WING BOT SURF DEPENDENT VARIABLE CP

2Y/BW	.2990	.3640	.4270	.5340	.6730	.7800	.8870	.9720
X/CW								
.010	-.1624	-.3766	.2604	.3434	.2382	.2174	.2400	
.020	.0000	-.1905	.2994	.2710	.2121	.1531	.1176	.0022
.040		-.1446	.2332					
.050	-.0521			.1592	.1049	.1138	.1116	
.069								.0001
.080				.1358				
.081			.1505					
.086		-.0122						
.094	-.0427							
.150				.0952	.1104	.1185	.1218	
.157								-.0888
.163		.1418						
.177			.1001					
.229	-.0208							
.246		.0827						
.250				.0988	.0985	.1019	.0761	
.274			.1074					
.345								.0011
.390		.0920						
.400				.0957	.1190		.0794	
.402			.0875					
.503								-.0290
.550				.0829	.0925			
.565			-.3853					
.600							.0251	
.637		.0811						
.650						.0318		
.670								-.4053
.700					-.0078			
.725				-.0038				
.750						-.3158	-.3219	
.760			-.0326					

AMES 11-073(OA148) -140A/B/C ORB LEFT WING BOT (XEBL71)

ALPHA (3) = 3.956 BETA (3) = 4.242

SECTION (1)LEFT WING BOT SURF DEPENDENT VARIABLE CP

2Y/BW	.2990	.3640	.4270	.5340	.6730	.7800	.8870	.9720
X/CW								
.775				-.3007	-.3197			
.798		-.0462						
.808			-.3377					
.834	-.0515							
.839		-.3241						
.850				-.3865	-.2768	-.3913		
.857			-.3696					
.862							-.4363	
.865	-.3285							
.879		-.3586						
.900	-.1832			-.4260		-.4520		
.905			-.4165					
.919		-.2968						
.950				-.2619	-.3538	-.4351		
.953			-.2148					
.955		-.3315						
.965	-.4056							
1.000			-.1594		-.1841		-.2401	

ALPHA (4) = 7.997 BETA (1) = -3.873 MACH = 1.3969 Q = 600.27 P = 439.47 RN/L = 2.9090

SECTION (1)LEFT WING BOT SURF DEPENDENT VARIABLE CP

2Y/BW	.2990	.3640	.4270	.5340	.6730	.7800	.8870	.9720
X/CW								
.010	.0134	-.1219	.4350	.5192	.4646	.5154	.5432	
.020	.0000	.0064	.4602	.3896	.4039	.4138	.4044	.1397
.040		.0430	.3513					
.050	.0886			.2845	.2774	.3166	.3598	
.069								.1587
.080				.2474				
.081			.2604					
.086		.1527						
.094	.0845							
.150				.2013	.2599	.2887	.2963	
.157								-.0229
.163		.2894						
.177			.2019					
.229	.0890							
.246		.1744						
.250				.2088	.2267	.2508	.2219	
.274			.1957					
.345								.1376
.390		.1799						

AMES 11-073(OA148) -140A/B/C ORB LEFT WING BOT (XEBL71)

ALPHA (4) = 7.987 BETA (1) = -3.873

SECTION (1)LEFT WING BOT SURF DEPENDENT VARIABLE CP

2Y/BW	.2990	.3640	.4270	.5340	.6730	.7800	.8870	.9720
X/CW								
.400				.1988	.2520		.2055	
.402			.1800					
.503								.0961
.550				.1850	.2003			
.565			-.4221					
.600							.1287	
.637		.1587						
.650						.1324		
.670								-.3325
.700					.0640			
.725				.0683				
.750						-.2641	-.2585	
.760			.0258					
.775				-.2938	-.2868			
.798		.0162						
.808			-.2825					
.834	-.0024							
.839		-.3082						
.850				-.3507	-.3762	-.3525		
.857			-.3443					
.862								-.3673
.865	-.3009							
.879		-.3536						
.900	-.1246			-.3962			-.4097	
.905			-.4014					
.919		-.2643						
.950				-.4375	-.4120	-.4294		
.953			-.4157					
.955		-.2940						
.965	-.3333							
1.000			-.1457		-.2499		-.2566	

ALPHA (4) = 7.995 BETA (2) = .177 MACH = 1.3969 Q = 600.27 P = 439.47 RN/L = 2.9090

SECTION (1)LEFT WING BOT SURF DEPENDENT VARIABLE CP

2Y/BW	.2990	.3640	.4270	.5340	.6730	.7800	.8870	.9720
X/CW								
.000	-.1300	-.3405	.2868	.5280	.4743	.5347	.5323	
.020	.0000	-.1214	.3608	.4218	.4204	.4406	.4219	.0272
.040		-.0680	.3278					
.050	.0269			.3175	.2980	.3380	.3700	
.069								.0669
.080				.2741				

AMES 11-073(OA148) -140A/B/C ORB LEFT WING BOT (XEBL71)

ALPHA (4) = 7.995 BETA (2) = .177

SECTION (1)LEFT WING BOT SURF DEPENDENT VARIABLE CP

2Y/BW	.2990	.3640	.4270	.5340	.6730	.7800	.8870	.9720
X/CW								
.081			.2479					
.086		.0734						
.094	.0375							
.150				.2096	.2651	.2879	.2955	
.157								-.0472
.163		.2419						
.177			.2004					
.229	.0582							
.246		.1652						
.250				.2089	.2375	.2506	.2256	
.274			.2030					
.345								.1037
.390		.1754						
.400				.1968	.2484		.2197	
.402			.1819					
.503								.0520
.550				.1841	.2000			
.565			-.4460					
.600							.1156	
.637		.1648						
.650						.1273		
.670								-.3599
.700					.0698			
.725				.0743				
.750						-.2677	-.2642	
.760			.0387					
.775				-.2729	-.2788			
.798		.0254						
.808			-.2717					
.834	.0188							
.839		-.2883						
.850				-.3435	-.3781	-.3535		
.857			-.3351					
.862								-.3965
.865	-.2866							
.879		-.3436						
.900	-.1156			-.3860			-.4153	
.905			-.3865					
.919		-.2464						
.950				-.4292	-.4078	-.4235		
.953			-.3846					
.955		-.2800						
.985	-.3486							
1.000			-.1354		-.2236		-.3010	

AMES 11-073(OA148) -140A/B/C ORB LEFT WING BOT (XEBL71)

ALPHA (4) = 7.892 BETA (3) = 4.237 MACH = 1.3969 Q = 600.27 P = 439.47 RN/L = 2.9090

SECTION (1)LEFT WING BOT SURF DEPENDENT VARIABLE CP

2Y/BW	.2990	.3640	.4270	.5340	.6730	.7800	.8870	.9720
X/CW								
.010	-.2615	-.4286	.1033	.4929	.4599	.5130	.5083	
.020	.0000	-.2181	.2198	.4238	.4181	.4406	.4267	-.0999
.040		-.1646	.2560					
.050	-.0541			.3263	.3113	.3359	.3755	
.069								-.0234
.080				.2661				
.081			.1975					
.086		.0050						
.094	-.0164							
.150				.2109	.2677	.2777	.2925	
.157								-.0775
.163		.1783						
.177			.1754					
.229	.0220							
.246		.1393						
.250				.2010	.2305	.2475	.2345	
.274			.1880					
.345								.0589
.390		.1585						
.400				.1967	.2388		.2209	
.402			.1765					
.503								.0083
.550				.1783	.1950			
.555			-.4306					
.600							.1055	
.637		.1707						
.650						.1299		
.670								-.3785
.700					.0748			
.725				.0765				
.750						-.2661	-.2688	
.760			.0405					
.775				-.2633	-.2724			
.798		.0206						
.808			-.2752					
.834	.0196							
.839		-.2782						
.850				-.3425	-.3616	-.3517		
.857			-.3254					
.862								-.4240
.865	-.2847							
.879		-.3298						
.900	-.1215			-.3880			-.4165	
.905			-.3792					
.919		-.2425						

AMES 11-073(OA148) -140A/B/C ORB LEFT WING BOT (XEBL71)

ALPHA (4) = 7.892 BETA (3) = 4.237

SECTION (1)LEFT WING BOT SURF DEPENDENT VARIABLE CP

2Y/BW	.2990	.3640	.4270	.5340	.6730	.7800	.8870	.9720
X/CW								
.950				-.4283	-.3611	-.4158		
.953			-.3371					
.955		-.2789						
.965	-.3610							
1.000			-.1280		-.1982		-.3041	

ALPHA (5) = 11.960 BETA (1) = -3.861 MACH = 1.3964 Q = 600.16 P = 439.71 RN/L = 2.9137

SECTION (1)LEFT WING BOT SURF DEPENDENT VARIABLE CP

2Y/BW	.2990	.3640	.4270	.5340	.6730	.7800	.8870	.9720
X/CW								
.010	-.1044	-.2780	.3764	.6889	.6692	.7299	.7377	
.020	.0000	-.0301	.4819	.5798	.6073	.6361	.6488	.0767
.040		.0256	.4612					
.050	.1046			.4779	.4938	.5239	.5630	
.069								.1581
.080				.4127				
.081			.3805					
.085		.1886						
.094	.1246							
.150				.3548	.4206	.4509	.4483	
.157								.0039
.163		.3696						
.177			.3245					
.209	.1535							
.246		.2725						
.250				.3426	.3798	.4044	.3832	
.274			.3219					
.345								.2031
.390		.2950						
.400				.3254	.3834		.3550	
.402			.3050					
.503								.1502
.550				.2872	.3075			
.565			-.4595					
.600							.2187	
.637		.2582						
.650						.2352		
.670								-.3006
.700					.1548			
.725				.1609				
.750						-.2047	-.2092	
.760			.1185					

AMES 11-073(OA148) -140A/B/C ORB LEFT WING BOT (XEBL71)

ALPHA (5) = 11.960 BETA (1) = -3.861

SECTION (1)LEFT WING BOT SURF DEPENDENT VARIABLE CP

2Y/BW	.2990	.3640	.4270	.5340	.6730	.7800	.8870	.9720
X/CW								
.775				-.2545	-.2295			
.798		.1033						
.808			-.2146					
.834	.0898							
.839		-.2608						
.850				-.2993	-.3440	-.3056		
.857			-.2999					
.862								-.3419
.865	-.2498							
.879		-.3066						
.900	-.0614			-.3509			-.3620	
.905			-.3528					
.919		-.2089						
.950				-.3960	-.3853	-.3846		
.943			-.3621					
.959		-.2418						
.965	-.2617							
1.000			-.1820		-.3264		-.3543	

ALPHA (5) = 11.959 BETA (2) = .177 MACH = 1.3964 Q = 800.16 P = 439.71 RN/L = 2.9137

SECTION (1)LEFT WING BOT SURF DEPENDENT VARIABLE CP

2Y/BW	.2990	.3640	.4270	.5340	.6730	.7800	.8870	.9720
X/CW								
.010	-.2423	-.3789	.1985	.6270	.6190	.6712	.6678	
.020	.0000	-.1385	.3302	.5493	.5757	.6066	.6155	-.0738
.040		-.0757	.3815					
.050	.0262			.4622	.4767	.5024	.5417	
.069								.0469
.080				.3928				
.081			.3214					
.086		.1119						
.094	.0730							
.150				.3463	.4053	.4296	.4393	
.157								-.0359
.163		.3040						
.177			.2952					
.229	.1182							
.246		.2379						
.270				.3273	.3620	.3939	.3703	
.274			.3062					
.345								.1381
.390		.2781						

AMES 11-073(OA148) -140A/B/C ORB LEFT WING BOT (XEBL71)

ALPHA (5) = 11.959 BETA (2) = .177

SECTION (1)LEFT WING BOT SURF DEPENDENT VARIABLE CP

2Y/BW	.2990	.3640	.4270	.5340	.6730	.7800	.8870	.9720
X/CW								
.400				.3197	.3720		.3334	
.402			.2919					
.503								.0947
.550				.2844	.2996			
.565			-.4772					
.600							.1925	
.637		.2624						
.650						.2163		
.670								-.3223
.700					.1429			
.725				.1585				
.750						-.2201	-.2230	
.760			.1217					
.775				-.2296	-.2345			
.798		.1021						
.808			-.2146					
.834	.0997							
.839		-.2325						
.850				-.2951	-.3488	-.3093		
.857			-.2845					
.862								-.3861
.865	-.2403							
.879		-.2950						
.900	-.0647			-.3400			-.3726	
.905			-.3370					
.919		-.1883						
.950				-.3914	-.3781	-.3807		
.952			-.3261					
.955		-.2240						
.965	-.2702							
1.000			-.2091		-.3212		-.3891	

ALPHA (5) = 11.967 BETA (3) = 4.251 MACH = 1.3964 Q = 600.16 P = 439.71 RN/L = 2.9137

SECTION (1)LEFT WING BOT SURF DEPENDENT VARIABLE CP

2Y/BW	.2990	.3640	.4270	.5340	.6730	.7800	.8870	.9720
X/CW								
.010	-.3460	-.4383	-.0007	.5353	.5490	.5785	.5846	
.020	.0000	-.2336	.1806	.5036	.5314	.5570	.5624	-.1976
.040		-.1692	.2917					
.050	-.0408			.4252	.4540	.4668	.5064	
.060								-.0501
.080				.3677				

AMES 11-073(OA148) -140A/B/C ORB LEFT WING BOT (XEBL71)

ALPHA (5) = 11.967 BETA (3) = 4.251

SECTION (1)LEFT WING BOT SURF DEPENDENT VARIABLE CP

2Y/BW	.2390	.3640	.4270	.5340	.6730	.7800	.8870	.9720
X/CW								
.081			.2611					
.086		.0293						
.094	.02 9							
.150				.3230	.3817	.4106	.4265	
.157								-.0723
.163		.2341						
.177			.2544					
.229	.0766							
.245		.1984						
.250				.3048	.3426	.3819	.3510	
.274			.2787					
.345								.0981
.390		.2465						
.400				.3093	.3557		.3204	
.402			.2791					
.503								.0647
.550				.2754	.2942			
.565			-.4347					
.600							.1825	
.637		.2589						
.650						.2069		
.670								-.3313
.700					.1465			
.725				.1522				
.750						-.2258	-.2333	
.750			.1128					
.775				-.2149	-.2349			
.798		.0918						
.808			-.2210					
.834	.0906							
.839		-.2322						
.850				-.2978	-.3493	-.3083		
.857			-.2736					
.862								-.4105
.865	-.2446							
.879		-.2898						
.900	-.1019			-.3424			-.3796	
.905			-.3393					
.919		-.1932						
.950				-.3831	-.3505	-.3856		
.953			-.2924					
.955		-.2194						
.955	-.2729							
1.000			-.2279		-.2673		-.4042	

AMES 11-073(OA148) -140A/B/C ORB LEFT WING BOT (XEBL71)

ALPHA (6) = 15.903 BETA (1) = -3.840 MACH = 1.3960 Q = 600.45 P = 440.18 RN/L = 2.5185

SECTION (1)LEFT WING BOT SURF DEPENDENT VARIABLE CP

Y/BW	.2990	.3640	.4270	.5340	.6730	.7800	.8870	.9720
X/CW								
.010	-.1997	-.3142	.3011	.7719	.7830	.8095	.8024	
.020	.0000	-.0417	.4659	.7082	.7492	.7738	.7819	-.0161
.040		.0290	.5272					
.050	.1251			.6153	.6531	.6824	.7174	
.069								.1373
.080				.5536				
.081			.4699					
.086		.2307						
.094	.1795							
.150				.5006	.5589	.6081	.5876	
.157								.0089
.163		.4517						
.177			.4373					
.229	.2290							
.246		.3658						
.250				.4672	.5215	.5648	.5104	
.274			.4414					
.445								.2580
.390		.4205						
.400				.4648	.5177		.4637	
.402			.4207					
.503								.2107
.550				.4153	.4210			
.565			-.4591					
.600							.3105	
.637		.3734						
.650						.3229		
.670								-.2578
.700					.2393			
.725				.2581				
.750						-.1621	-.1708	
.760			.2094					
.775				-.1906	-.1828			
.799		.1975						
.808			-.1474					
.834	.1921							
.939		-.2030						
.850				-.2508	-.3172	-.2583		
.857			-.2511					
.862								-.3307
.865	-.1964							
.873		-.2607						
.880	-.1284			-.3032			-.3206	
.885			-.2984					
[illegible]		-.2538						

AMES 11-073(OA148) -140A/B/C ORB LEFT WING BOT (XEBL71)

ALPHA (6) = 15.903 BETA (1) = -3.840

SECTION (1)LEFT WING BOT SURF DEPENDENT VARIABLE CP

2Y/BW	.2990	.3640	.4270	.5340	.6730	.7800	.8870	.9720
X/CW								
.950				-.3561	-.3460	-.3414		
.953			-.3374					
.955		-.1951						
.965	-.0938							
1.000			-.2646		-.3388		-.5005	

ALPHA (6) = 15.917 BETA (2) = .180 MACH = 1.3960 Q = 600.45 P = 440.18 RN/L = 2.9185

SECTION (1)LEFT WING BOT SURF DEPENDENT VARIABLE CP

2Y/BW	.2990	.3640	.4270	.5340	.6730	.7800	.8870	.9720
X/CW								
.010	-.3012	-.3957	.1052	.6568	.6951	.6995	.6804	
.020	.0000	-.1501	.3023	.6406	.6821	.7050	.6995	-.1470
.040		-.0782	.4338					
.050	.0543			.5716	.6229	.6362	.6596	
.069								.0255
.080				.5162				
.081			.3948					
.086		.1407						
.094	.1123							
.150				.4712	.5350	.5774	.5484	
.157								-.0348
.163		.3720						
.177			.3999					
.229	.1782							
.246		.3249						
.250				.4456	.4966	.5388	.4819	
.274			.4167					
.340								.1913
.340		.3854						
.400				.4366	.4959		.4306	
.402			.4093					
.403								.1668
.550				.4150	.4085			
.565			-.4897					
.600							.2885	
.637		.3744						
.650						.3028		
.670								-.2738
.700					.2485			
.725				.2540				
.750						-.1692	-.1837	
.750			.2165					

AMES 11-073(OA148) -140A/B/C ORB LEFT WING BOT (XEBL71)

ALPHA (6) = 15.917 BETA (2) = .180

SECTION (1)LEFT WING BOT SURF DEPENDENT VARIABLE CP

2Y/BW	.2990	.3640	.4270	.5340	.6730	.7800	.8870	.9720
X/CW								
.775				-.1638	-.1823			
.798		.1979						
.808			-.1544					
.834	.1958							
.839		-.1802						
.850				-.2512	-.3197	-.2599		
.857			-.2419					
.862							-.3619	
.865	-.1930							
.879		-.2523						
.900	-.0758			-.3010		-.3336		
.905			-.2992					
.919		-.1781						
.950				-.3525	-.3504	-.3504		
.953			-.3083					
.955		-.1876						
.965	-.1316							
1.000			-.3955		-.3123		-.5232	

ALPHA (6) = 15.910 BETA (3) = 4.280 MACH = 1.3960 Q = 600.45 P = 440.18 RN/L = 2.9185

SECTION (1)LEFT WING BOT SURF DEPENDENT VARIABLE CP

2Y/BW	.2990	.3640	.4270	.5340	.6730	.7800	.8870	.9720
X/CW								
.010	-.3766	-.4703	-.0797	.5392	.5851	.5698	.5585	
.020	.0000	-.2424	.1479	.5569	.5994	.6236	.6082	-.2455
.040		-.1724	.3267					
.050	-.0214			.5137	.5651	.5809	.6006	
.069								-.0566
.080				.4714				
.081			.3243					
.085		.0546						
.094	.0555							
.150				.4332	.4994	.5432	.5182	
[illegible]								-.0750
.183		.2999						
[illegible]			.3450					
[illegible]	.1292							
[illegible]		.2714						
[illegible]				.4132	.4724	.5075	.4629	
[illegible]			.3905					
[illegible]								.1423
.540		.3545						

AMES 11-073(OA148) -140A/B/C ORB LEFT WING BOT (XEBL71)

ALPHA (6) = 15.910 BETA (3) = 4.280

SECTION (1)LEFT WING BOT SURF DEPENDENT VARIABLE CP

2Y/BW	.2990	.3640	.4270	.5340	.6730	.7800	.8870	.9720
X/CW								
.400				.4210	.4672		.4116	
.402			.3888					
.503								.1132
.550				.3799	.3954			
.565			-.4684					
600							.2636	
.637		.3585						
.650						.2879		
.670								-.2772
.700					.2488			
.725				.2498				
.750						-.1774	-.1935	
.760			.2034					
.775				-.1592	-.1886			
.799		.1835						
.808			-.1556					
.834	.1850							
.839		-.1779						
.850				-.2407	-.3147	-.2570		
.857			-.2199					
.882								-.3816
.885	-.1902							
.899		-.2440						
.900	-.0939			-.3041			-.3366	
.905			-.2996					
.919		-.1705						
.920				-.3482	-.3495	-.3567		
.923			-.2561					
.945		-.1903						
.955	-.1702							
1.000			-.3011		-.3529		-.4832	

AMES 11-073(OA148) -140A/B/C ORB LEFT WING BOT (XE8L72) (05 AUG 75)

REFERENCE DATA

SREF = 2690.0000 SQ.FT. XMRP = 1076.6800 IN. XO
LREF = 474.8000 IN. YMRP = .0000 IN. YO
BREF = 936.0680 IN. ZMRP = 375.0000 IN. ZO
SCALE = .0300

PARAMETRIC DATA

RUDDER = -5.000 SPOBRK = 55.000
BDFLAP = 16.300 L-ELVN = -10.000
R-ELVN = -10.000 MACH = 1.250

ALPHA (1) = -3.944 BETA (1) = -3.854 MACH = 1.2471 Q = 599.40 P = 550.62 RN/L = 3.0068

SECTION (1)LEFT WING BOT SURF DEPENDENT VARIABLE CP

2Y/BW	.2990	.3640	.4270	.5340	.6730	.7800	.8870	.9720
X/CW								
.010	-.1494	-.2022	-.2039	-.4033	-.5073	-.3557	-.3261	
.020	.0000	-.2719	-.3077	-.5532	-.5493	-.5657	-.5610	-.6058
.040		-.2643	-.3322					
.050	-.1518			-.5750	-.5760	-.6005	-.5920	
.069								-.6566
.080				-.5337				
.081			-.2329					
.086		-.1478						
.094	-.1493							
.150				-.4938	-.5119	-.5304	-.5412	
.157								-.3652
.163		-.0501						
.177			-.2137					
.229	-.1330							
.246		-.1416						
.250				-.2353	-.4621	-.4775	-.5001	
.274			-.1984					
.345								-.5970
.390		-.1693						
.400				-.2041	-.2657		-.4448	
.402			-.1673					
.503								-.5676
.550				-.1426	-.1778			
.565			-.3769					
.600							-.4112	
.637		-.1111						
.650						-.2205		
.670								-.6674
.700					-.2136			
.725				-.1958				
.750						-.4618	-.6866	
.760			-.0754					
.775				-.4718	-.3639			
.799		-.1065						
.804			-.6006					
.834	-.1693							
.839		-.4910						
.850				-.5766	-.5376	-.5898		

AMES 11-073(QA148) -140A/B/C ORB LEFT WING BOT (XEBL72)

ALPHA (1) = -3.944 BETA (1) = -3.854

SECTION (1)LEFT WING BOT SURF DEPENDENT VARIABLE CP

2Y/BW	.2990	.3640	.4270	.5340	.6730	.7800	.8870	.9720
X/CW								
.857			-.5466					
.862								-.6306
.865	-.5164							
.879		-.5263						
.900	-.3731			-.4877			-.4222	
.905			-.4150					
.919		-.4482						
.950				-.3631	-.6337	-.3082		
.953			-.3669					
.955		-.3087						
.965	-.5023							
1.000			-.2467		-.2472		-.3378	

ALPHA (1) = -3.937 BETA (2) = .190 MACH = 1.2471 Q = 599.40 P = 550.63 RN/L = 3.0068

SECTION (1)LEFT WING BOT SURF DEPENDENT VARIABLE CP

2Y/EW	.2990	.3640	.4270	.5340	.6730	.7800	.8870	.9720
X/CW								
.010	-.0970	-.1300	-.0860	-.4027	-.5315	-.3958	-.3804	
.020	.0000	-.1378	-.1315	-.5514	-.5693	-.5971	-.5941	-.6605
.040		-.1321	-.1971					
.050	-.1149			-.5225	-.5899	-.6260	-.6242	
.059								-.6880
.080				-.4957				
.091			-.1816					
.086		-.0687						
.094	-.1171							
.150				-.2796	-.5100	-.5462	-.5721	
.157								-.3866
.163		.0072						
.177			-.1620					
.229	-.0902							
.246		-.0963						
.250				-.1840	-.3760	-.4925	-.5276	
.274			-.1427					
.345								-.6335
.390		-.1121						
.400				-.1398	-.1704		-.4643	
.402			-.1170					
.503								-.6021
.550				-.1160	-.1350			
.565			-.4176					
.600							-.3001	

DATE 10 FEB 76 TABULATED PRESSURE DATA - OA148 (AMES 11-073-1)

AMES 11-073(OA148) -140A/B/C ORB LEFT WING BOT (XEBL72)

ALPHA (1) = -3.937 BETA (2) = .190

SECTION (1)LEFT WING BOT SURF DEPENDENT VARIABLE CP

2Y/BW	.2990	.3640	.4270	.5340	.6730	.7800	.8870	.9720
X/CW								
.637		-.0885						
.650						-.1707		
.670								-.6625
.700					-.1878			
.725				-.1814				
.750						-.4433	-.5757	
.760			-.0705					
.775				-.4627	-.3610			
.798		-.1082						
.808			-.5964					
.834	-.1444							
.839		-.4831						
.850				-.5754	-.5124	-.5639		
.857			-.5437					
.862								-.5648
.865	-.4939							
.879		-.5113						
.900	-.3977			-.5816			-.5233	
.905			-.5392					
.919		-.4893						
.950				-.3806	-.6216	-.3154		
.953			-.3745					
.955		-.3897						
.965	-.5497							
1.000			-.2572		-.2664		-.2078	

ALPHA (1) = -3.943 BETA (3) = 4.266 MACH = 1.2471 Q = 599.40 P = 550.63 RN/L = 3.0068

SECTION (1)LEFT WING BOT SURF DEPENDENT VARIABLE CP

2Y/BW	.2990	.3640	.4270	.5340	.6730	.7800	.8870	.9720
X/CW								
.010	-.0960	-.0447	.0327	-.3885	-.5392	-.4328	-.4177	
.020	.0000	-.0594	.0191	-.5257	-.5790	-.6125	-.6189	-.6889
.040		-.0506	-.0884					
.050	-.1053			-.4443	-.5910	-.6349	-.6464	
.069								-.6843
.080				-.3563				
.081			-.1109					
.085		-.0141						
.074	-.0373							
.150				-.2057	-.4569	-.5428	-.5712	
.157								-.3917
.163		.0589						

AMES 11-073(OA148) -140A/B/C ORB LEFT WING BOT (XEBL72)

ALPHA (1) = -3.943 BETA (3) = 4.266

SECTION (1)LEFT WING BOT SURF DEPENDENT VARIABLE CP

2Y/BW	.2990	.3640	.4270	.5340	.6730	.7800	.8870	.9720
X/CW								
.177			-.1099					
.229	-.0651							
.246		-.0456						
.250				-.1441	-.1835	-.3848	-.5320	
.274			-.0927					
.345								-.6306
.390		-.0661						
.400				-.1054	-.1334		-.3280	
.402			-.0861					
.503								-.4487
.555				-.0938	-.1098			
.560			-.3739					
.600							-.1489	
.637		-.0766						
.650						-.1561		
.670								-.4255
.700					-.1711			
.725				-.1723				
.750						-.4349	-.5564	
.760			-.0813					
.775				-.4643	-.3759			
.798		-.1098						
.808			-.5978					
.834	-.1630							
.839		-.4804						
.850				-.5762	-.4845	-.5652		
.857			-.5422					
.862								-.4973
.865	-.5020							
.879		-.4890						
.900	-.3991			-.5893			-.5165	
.905			-.5386					
.919		-.4771						
.950				-.3768	-.5991	-.3389		
.953			-.3684					
.955		-.4506						
.965	-.5791							
1.000			-.265:		-.2497		-.2480	

AMES 11-073(OA148) -140A/B/C ORB LEFT WING BOT (XEBL72)

ALPHA (2) = .045 BETA (1) = -3.865 MACH = 1.2470 Q = 599.89 P = 551.11 RN/L = 3.0108

SECTION (1)LEFT WING BOT SURF DEPENDENT VARIABLE CP

2Y/BW	.2990	.3640	.4270	.5340	.6730	.7800	.8870	.9720
X/CW								
.010	.0063	.0122	.2116	-.1787	-.2914	-.2146	-.1292	
.020	.0000	-.0200	.1795	-.3270	-.3508	-.3616	-.3897	-.3229
.040		-.0176	-.0094					
.050	-.0314			-.2388	-.3296	-.3785	-.3978	
.069								-.3573
.080				-.2109				
.091			-.0507					
.096		.0226						
.094	-.0549							
.150				-.1375	-.2281	-.2720	-.3172	
.157								-.2196
.163		.0936						
.177			-.0621					
.229	-.0601							
.246		-.0295						
.250				-.0833	-.0973	-.1962	-.2659	
.274			-.0574					
.345								-.2205
.390		-.0428						
.400				-.0678	-.0727		-.1264	
.402			-.0538					
.503								-.1225
.550				-.0395	-.0479			
.565			-.4224					
.600							-.1073	
.637		-.0238						
.650						-.0920		
.670								-.4561
.700					-.1221			
.725				-.1147				
.750						-.4174	-.5061	
.760			-.0762					
.775				-.4152	-.3433			
.798		-.0717						
.808			-.5199					
.834	-.1335							
.839		-.4582						
.850				-.5395	-.4397	-.5428		
.857			-.5018					
.862								-.4514
.866	-.4686							
.879		-.4799						
.900	-.3164			-.5290			-.2771	
.905			-.4272					
.919		-.4197						

AMES 11-073(OA148) -140A/B/C ORB LEFT WING BOT (XE8L72)

ALPHA (2) = .045 BETA (1) = -3.865

SECTION (1)LEFT WING BOT SURF DEPENDENT VARIABLE CP

2Y/BW	.2990	.3640	.4270	.5340	.6730	.7800	.8870	.9720
X/CW								
.950				-.2819	-.4564	-.2575		
.953			-.3114					
.955		-.2534						
.965	-.4672							
1.000			-.1967		-.2503		-.2075	

ALPHA (2) = .050 BETA (2) = .176 MACH = 1.2470 Q = 599.89 P = 551.11 RN/L = 3.0108

SECTION (1)LEFT WING BOT SURF DEPENDENT VARIABLE CP

2Y/BW	.2990	.3640	.4270	.5340	.6730	.7800	.8870	.9720
X/CW								
.010	-.0418	.0003	.2601	-.1559	-.3083	-.2578	-.1756	
.020	.0000	-.0099	.2322	-.1812	-.2921	-.3752	-.4268	-.3327
.040		.0023	.0516					
.050	-.0435			-.1759	-.2836	-.3633	-.4268	
.064								-.3219
.067				-.1502				
.075			-.0023					
.086		.0447						
.094	-.0695							
.150				-.1037	-.1562	-.2380	-.3188	
.157								-.2021
.163		.1140						
.177			-.0373					
.229	-.0505							
.246		-.0032						
.260				-.0560	-.0823	-.0800	-.1201	
.274			-.0223					
.345								-.1078
.360		-.0109						
.400				-.0248	-.0265		-.0822	
.402			-.0190					
.503								-.1299
.550				-.0195	-.0265			
.595			-.4672					
.600							-.0796	
.637		-.0118						
.650						-.0743		
.670								-.4509
.700					-.1085			
.725				-.1065				
.750						-.4088	-.4961	
.760			-.0776					

AMES 11-073(OA148) -140A/B/C ORB LEFT WING BOT (XE8L72)

ALPHA (2) = .050 BETA (2) = .176

SECTION (1)LEFT WING BOT SURF DEPENDENT VARIABLE CP

2Y/BW	.2990	.3640	.4270	.5340	.6730	.7800	.8870	.9720
X/CW								
.775				-.4211	-.3693			
.798		-.0796						
.808			-.5363					
.834	-.1220							
.839		-.4600						
.850				-.5336	-.4344	-.5365		
.857			-.5084					
.862							-.3682	
.865	-.4646							
.879		-.4746						
.900	-.3194			-.5618		-.2412		
.905			-.5165					
.919		-.4407						
.950				-.3319	-.6034	-.2623		
.953			-.3316					
.955		-.3652						
.965	-.5187							
1.000			-.2415		-.2478		-.2030	

ALPHA (2) = .045 BETA (3) = 4.247 MACH = 1.2470 Q = 599.89 P = 551.11 RN/L = 3.0108

SECTION (1)LEFT WING BOT SURF DEPENDENT VARIABLE CP

2Y/BW	.2990	.3640	.4270	.5340	.6730	.7800	.8870	.9720
X/CW								
.010	-.1212	-.0645	.2845	-.0519	-.2608	-.2658	-.1993	
.020	.0000	-.0364	.2608	-.0526	-.1796	-.3510	-.4217	-.1878
.040		-.0168	.1134					
.050	-.0851			-.1059	-.2271	-.2774	-.3412	
.069								-.1871
.080				-.0767				
.091			.0542					
.096		.0485						
.094	-.0898							
.150				-.0626	-.0889	-.0981	-.1128	
.187								-.1300
.183		.1354						
.177			-.0002					
.223	-.0559							
.245		.0364						
.250				-.0153	-.0454	-.0615	-.0918	
.274			.0115					
.345								-.0891
.330		.0261						

AMES 11-073(OA148) -140A/B/C ORB LEFT WING BOT (XE8L72)

ALPHA (2) = .045 BETA (3) = 4.247

SECTION (1)LEFT WING BOT SURF DEPENDENT VARIABLE CP

2Y/BW	.2990	.3640	.4270	.5340	.6730	.7800	.8870	.9720
X/CW								
.400				.0004	.0067		-.0633	
.402			.0075					
.503								-.1157
.550				-.0053	-.0110			
.595			-.4203					
.600							-.0789	
.637		-.0004						
.650						-.0682		
.670								-.4458
.700					-.1008			
.725				-.1019				
.750						-.4081	-.5093	
.760			-.0739					
.775				-.4296	-.3328			
.792		-.0714						
.808			-.5407					
.834	-.1180							
.839		-.4479						
.850				-.5316	-.4542	-.5377		
.857			-.4990					
.860								-.2824
.865	-.4623							
.870		-.4265						
.900	-.3175			-.5691			-.2450	
.905			-.5033					
.919		-.4351						
.950				-.3418	-.5774	-.2793		
.953			-.3253					
.955		-.4143						
.965	-.5413							
1.000			-.2433		-.2406		-.2208	

ALPHA (3) = 3.983 BETA (1) = -3.876 MACH = 1.2481 Q = 600.17 P = 550.40 RN/L = 3.0062

SECTION (1)LEFT WING BOT SURF DEPENDENT VARIABLE CP

2Y/BW	.2990	.3640	.4270	.5340	.6730	.7800	.8870	.9720
X/CW								
.010	.0371	-.0460	.4304	.2407	.1338	.1362	.1716	
.020	.0000	-.0028	.3911	.1328	.1198	.0579	.0074	.0774
.040		.0215	.2211					
.050	.0387			.0537	.0050	.0395	.0212	
.059								.0356
.060				.0520				

AMES 11-073(OA148) -140A/B/C ORB LEFT WING BOT (XEBL72)

ALPHA (3) = 3.983 BETA (1) = -3.876

SECTION (1)LEFT WING BOT SURF DEPENDENT VARIABLE CP

2Y/BW	.2930	.3640	.4270	.5340	.6730	.7800	.8870	.9720
X/CW								
.081			.1298					
.086		.0957						
.094	.0181							
.150				.0403	.0550	.0753	.0834	
.157								-.0712
.163		.2061						
.177			.0793					
.229	-.0046							
.246		.0792						
.250				.0706	.0660	.0806	.0456	
.274			.0755					
.345								.0188
.390		.0745						
.400				.0754	.0944		.0499	
.402			.0635					
.503								-.0214
.550				.0732	.0813			
.565			-.4774					
.600							-.0005	
.637		.0644						
.650						.0106		
.670								-.4427
.700					-.0377			
.725				-.0307				
.750						-.3830	-.4279	
.760			-.0464					
.775				-.3717	-.4165			
.798		-.0398						
.808			-.4516					
.834	-.0731							
.839		-.4211						
.850				-.4968	-.3859	-.5012		
.867			-.4624					
.882								-.4282
.865	-.4271							
.879		-.4471						
.900	-.2469			-.5372			-.5414	
.905			-.5267					
.919		-.3782						
.940				-.2793	-.3923	-.5602		
.943			-.2731					
.955		-.2702						
.965	-.4398							
1.000			-.1756		-.2598		-.2275	

AMES 11-073(OA149) -148A/B/C ORB LEFT WING BOT (XEBL72)

ALPHA (3) = 3.983 BETA (2) = .181 MACH = 1.2481 Q = 600.17 P = 550.40 RN/L = 3.0062

SECTION (1)LEFT WING BOT SURF DEPENDENT VARIABLE CP

Z/BW	.2990	.3640	.4270	.5340	.6730	.7800	.8870	.9720
X/CW								
.010	-.0869	-.2297	.3705	.2894	.1732	.1688	.1976	
.020	.0000	-.1082	.3693	.1818	.1437	.0983	.0610	.0277
.040		-.0700	.2505					
.050	-.0202			.1121	.0460	.0744	.0667	
.069								.0070
.080				.0958				
.081			.1562					
.086		.0608						
.094	-.0225							
.150				.0671	.0981	.0974	.0895	
.157								-.0851
.163		.2002						
.177			.0883					
.229	-.0210							
.246		.0908						
.250				.0939	.0843	.0847	.0466	
.274			.0990					
.345								.0068
.350		.0937						
.400				.0972	.1157		.0740	
.402			.0888					
.503								-.0424
.550				.0912	.0943			
.555			-.5099					
.600							-.0062	
.637		.0863						
.650						.0076		
.670								-.4804
.700					-.0364			
.725				-.0207				
.750						-.3901	-.4262	
.760			-.0422					
.775				-.3717	-.4053			
.798		-.0542						
.808			-.4456					
.834	-.0702							
.839		-.4144						
.850				-.4902	-.3786	-.5007		
.857			-.4625					
.852								-.4590
.855	-.4274							
.879		-.4311						
.900	-.2316			-.5351			-.5519	
.905			-.5249					
.919		-.3754						

DATE 10 FEB 76 TABULATED PRESSURE DATA - OA148 (AMES 11-073-1)

AMES 11-073(OA148) -140A/B/C ORB LEFT WING BOT (XEBL72)

ALPHA (3) = 3.983 BETA (2) = .181

SECTION (1)LEFT WING BOT SURF DEPENDENT VARIABLE CP

2Y/BW	.2990	.3640	.4270	.5340	.6730	.7800	.8870	.9720
X/CW								
.950				-.2892	-.4218	-.5518		
.953			-.2670					
.955		-.3504						
.965	-.4739							
1.000			-.1889		-.2341		-.2411	

ALPHA (3) = 3.984 BETA (3) = 4.240 MACH = 1.2481 Q = 600.17 P = 550.40 RN/L = 3.0082

SECTION (1)LEFT WING BOT SURF DEPENDENT VARIABLE CP

2Y/BW	.2990	.3640	.4270	.5340	.6730	.7800	.8870	.9720
X/CW								
.010	-.2455	-.3742	.2852	.3428	.2090	.2299	.2443	
.020	.0000	-.2180	.3180	.2406	.1798	.1681	.1221	-.0396
.040		-.1685	.2619					
.050	-.0930			.1700	.0904	.1108	.1171	
.069								-.0294
.080				.1363				
.081			.1769					
.086		.0122						
.094	-.0735							
.150				.0991	.1197	.1128	.1094	
.157								-.0980
.163		.1772						
.177			.1112					
.229	-.0601							
.246		.1017						
.250				.1128	.1009	.1037	.0736	
.274			.1165					
.345								-.0312
.390		.1060						
.400				.1152	.1426		.0918	
.402			.1100					
.503								-.0834
.550				.0973	.0985			
.585			-.4713					
.600							-.0134	
.637		.0917						
.650						.0110		
.670								-.5160
.700					-.0330			
.725				-.0200				
.750						-.4018	-.4278	
.760			-.0406					

AMES 11-073(OA148) -140A/B/C ORB LEFT WING BOT (XEBL72)

ALPHA (3) = 3.984 BETA (3) = 4.240

SECTION (1)LEFT WING BOT SURF DEPENDENT VARIABLE CP

2Y/BW	.2990	.3640	.4270	.5340	.6730	.7800	.8870	.9720
X/CW								
.775				-.3300	-.4054			
.798		-.0477						
.808			-.4547					
.834	-.0701							
.839		-.4061						
.850				-.4870	-.3613	-.5031		
.857			-.4509					
.862								-.4922
.865	-.4261							
.879		-.3918						
.900	-.2295			-.5411			-.5711	
.905			-.5032					
.919		-.3711						
.950				-.2959	-.4416	-.5279		
.953			-.2657					
.955		-.3964						
.965	-.4955							
1.000			-.1910		-.2205		-.2554	

ALPHA (4) = 7.933 BETA (1) = -3.872 MACH = 1.2470 Q = 599.90 P = 551.11 RN/L = 3.0127

SECTION (1)LEFT WING BOT SURF DEPENDENT VARIABLE CP

2Y/BW	.2990	.3640	.4270	.5340	.6730	.7800	.8870	.9720
X/CW								
.010	-.0271	-.2301	.4065	.5423	.4828	.5635	.5754	
.020	.0000	-.0562	.4583	.4068	.4258	.4376	.4597	.0840
.040		-.0136	.3741					
.050	.0690			.3123	.3121	.3402	.3780	
.069								.1247
.080				.2506				
.081			.2744					
.086		.1284						
.094	.0672							
.150				.2089	.2733	.2996	.2876	
.157								-.0344
.163		.2949						
.177			.2040					
.229	.0540							
.246		.1761						
.250				.2229	.2324	.2708	.2321	
.274			.2047					
.345								.1006
.390		.1863						

AMES 11-073(OA148) -140A/B/C ORB LEFT WING BOT (XEBL72)

ALPHA (4) = 7.933 BETA (1) = -3.872

SECTION (1)LEFT WING BOT SURF DEPENDENT VARIABLE CP

2Y/BW	.2990	.3340	.4270	.5340	.6730	.7800	.8870	.9720
X/CW								
.400				.2181	.2915		.2230	
.402			.1980					
.503								.0398
.550				.1962	.1845			
.565			-.5082					
.600							.0857	
.637		.1737						
.650						.1034		
.670								-.4325
.700					.0240			
.725				.0494				
.750						-.3530	-.3719	
.760			.0193					
.775				-.3558	-.3823			
.798		.0055						
.808			-.3798					
.834	.0029							
.839		-.3877						
.850				-.4563	-.4756	-.4697		
.857			-.4278					
.862								-.3784
.865	-.3804							
.879		-.4287						
.900	-.1642			-.5039			-.5202	
.905			-.5041					
.919		-.3278						
.950				-.3558	-.4978	-.5510		
.953			-.2550					
.955		-.3638						
.965	-.4210							
1.000			-.1811		-.2212		-.3274	

ALPHA (4) = 7.940 BETA (2) = .173 MACH = 1.2470 Q = 599.90 P = 551.11 PV/L = 3.0127

SECTION (1)LEFT WING BOT SURF DEPENDENT VARIABLE CP

2Y/BW	.2990	.3340	.4270	.5340	.6730	.7800	.8870	.9720
X/CW								
.010	-.2190	-.4690	.2267	.5509	.5039	.5567	.5652	
.020	.0000	-.2068	.3388	.4440	.4446	.4552	.4664	-.0439
.040		-.1439	.3285					
.050	-.0217			.3465	.3392	.3517	.3881	
.069								.0221
.080				.2872				

AMES 11-073(OA149) -140A/B/C ORB LEFT WING BOT (XEBL72)

ALPHA (4) = 7.940 BETA (21 = .173

SECTION (11)LEFT WING BOT SURF DEPENDENT VARIABLE CP

Z/BW	.2990	.3640	.4270	.5340	.6730	.7800	.8870	.9720
X/Cw								
.081			.2516					
.086		.0341						
.094	.0054							
.150				.2482	.2835	.3050	.2993	
.157								-.0623
.163		.2382						
[illegible]			.2098					
.279	.0269							
.286		.1522						
[illegible]				.2271	.2507	.2840	.2354	
[illegible]			.2179					
.345								.0451
.350		.1376						
.401				.2360	.2939		.2139	
.402			.2119					
[illegible]								-.0007
[illegible]				.2101	.2000			
[illegible]			-.5647					
[illegible]							.0750	
[illegible]		.1892						
.550						.1041		
[illegible]								-.4640
[illegible]					.0317			
.735				.0575				
[illegible]						-.3622	-.3749	
[illegible]			.0206					
[illegible]				-.3495	-.3745			
.738		.0113						
.808			-.3789					
.834	.0034							
.839		-.3669						
[illegible]				-.4536	-.4750	-.4684		
[illegible]			-.4281					
[illegible]								-.4350
[illegible]	-.3845							
[illegible]		-.4094						
[illegible]	-.1511			-.5024			-.5294	
[illegible]			-.4940					
[illegible]		-.3139						
[illegible]				-.3500	-.4766	-.5420		
[illegible]			-.3070					
[illegible]		-.3641						
[illegible]	-.4361							
1.000			-.1787		-.1959		-.3263	

AMES 11-073(OA148) -140A/B/C ORB LEFT WING BOT (XEBL72)

ALPHA (4) = 7.943 BETA (3) = 4.236 MACH = 1.2470 Q = 599.90 R = 551.11 RN/L = 3.6127

SECTION (1)LEFT WING BOT SURF DEPENDENT VARIABLE CP

2Y/BW	.2990	.3640	.4270	.5340	.6730	.7800	.8870	.9720
X/CW								
.010	-.3990	-.5337	.0659	.5166	.4850	.5296	.5339	
.020	.0000	-.3094	.2058	.4338	.4386	.4521	.4721	-.1955
.040		-.2429	.2639					
.050	-.1020			.3511	.3470	.3625	.3969	
.069								-.0875
.080				.2939				
.081			.2106					
.086		-.0397						
.094	-.0579							
.150				.2528	.2881	.3251	.3043	
.157								-.1008
.163		.1798						
.177			.2079					
.229	-.0176							
.246		.1319						
.250				.2379	.2788	.3010	.2390	
.274			.22.					
.345								-.0014
.390		.1963						
.400				.2491	.2886		.2061	
.402			.2320					
.503								-.0460
.550				.2023	.2008			
.565			-.5122					
.600							.0637	
.637		.1898						
.650						.0907		
.670								-.4803
.700					.0335			
.725				.0601				
.750						-.3659	-.3858	
.765			.0216					
.775				-.3478	-.3718			
.798		.0075						
.808			-.3609					
.834	.0029							
.839		-.3597						
.850				-.4387	-.3961	-.4622		
.857			-.4078					
.862								
.865	-.3909							-.5063
.879		-.3643						
.900	-.1523			-.5003			-.5401	
.905			-.4693					
.919		-.3052						

AMES 11-073(OA148) -140A/B/C ORB LEFT WING BOT (XEBL72)

ALPHA (4) = 7.943 BETA (3) = 4.236

SECTION (1)LEFT WING BOT SURF DEPENDENT VARIABLE CP

2Y/BW	.2990	.3640	.4270	.5340	.6730	.7800	.8870	.9720
X/CW								
.950				-.2817	-.4207	-.5297		
.953			-.3926					
.955		-.3552						
.965	-.4508							
1.000			-.1502		-.2211		-.3655	

ALPHA (5) = 12.023 BETA (1) = -3.855 MACH = 1.2460 Q = 599.73 P = 551.81 RN/L = 3.0130

SECTION (1)LEFT WING BOT SURF DEPENDENT VARIABLE CP

2Y/BW	.2990	.3640	.4270	.5340	.6730	.7800	.8870	.9720
X/CW								
.010	-.1703	-.4057	.3011	.7027	.6969	.7526	.7386	
.020	.0000	-.1053	.4541	.6101	.6496	.6816	.6811	-.0327
.040		-.0373	.4755					
.050	.0805			.5060	.5460	.5793	.5959	
.069								.0791
.080				.4466				
.081			.4110					
.086		.1591						
.094	.1105							
.150				.3960	.4641	.5003	.4570	
.157								-.0361
.163		.3844						
.177			.3512					
.229	.1279							
.246		.2869						
.250				.3843	.4292	.4454	.3838	
.274			.3500					
.345								.1515
.380		.3258						
.400				.3771	.4049		.3342	
.402			.3660					
.503								.1003
.550				.3058	.3038			
.585			-.5525					
.600							.1821	
.637		.2910						
.650						.1912		
.670								-.3998
.700					.1017			
.725				.1315				
.750						-.3019	-.3300	
.760			.0838					

AMES 11-073(OA148) -140A/B/C ORB LEFT WING BOT (XEBL72)

ALPHA (5) = 12.023 BETA (1) = -3.855

SECTION (1)LEFT WING BOT SURF DEPENDENT VARIABLE CP

2Y/BW	.2990	.3640	.4270	.5340	.6730	.7800	.8870	.9720
X/CW								
.775				-.3372	-.3307			
.798		.0737						
.808			-.3108					
.834	.0664							
.839		-.3530						
.850				-.4093	-.4528	-.4183		
.857			-.4038					
.862								
.865	-.3450							-.4284
.870		-.3776						
.900	-.1056			-.4587				
.905			-.4550			-.4705		
.919		-.2806						
.950				-.5153	-.4729	-.4989		
.952			-.4281					
.955		-.3225						
.965	-.3859							
1.000			-.1838		-.3684		-.4237	

ALPHA (5) = 12.037 BETA (2) = .182 MACH = 1.2460 Q = 599.73 P = 551.81 RN/L = 3.0130

SECTION (1)LEFT WING BOT SURF DEPENDENT VARIABLE CP

2Y/BW	.2990	.3640	.4270	.5340	.6730	.7800	.8870	.9720
X/CW								
.010	-.3496	-.4951	.1057	.6302	.6512	.6737	.6532	
.020	.0000	-.2213	.2896	.5791	.6252	.6470	.6336	-.1974
.040		-.1471	.3790					
.050	-.0107							
.069				.4967	.5426	.5651	.5715	
.080								-.0405
.081				.4394				
.086			.3511					
.094		.0763						
.150	.0449							
.157				.3977	.4684	.4939	.4433	
.163								-.0673
.177		.3090						
.223			.3356					
.246	.0891							
.253		.2457						
.274				.3892	.4254	.4397	.3702	
.345			.3504					
.393		.3283						.0889

AMES 11-073(OA148) -140A/B/C ORB LEFT WING BOT (XEBL72)

ALPHA (5) = 12.037 BETA (2) = .182

SECTION (1)LEFT WING BOT SURF DEPENDENT VARIABLE CP

2Y/BW	.2990	.3640	.4270	.5340	.6730	.7800	.8870	.9720
X/CW								
.400				.3763	.4006		.3141	
.402			.3766					
.503								.0468
.550				.3055	.2979			
.565			-.5777					
.600							.1594	
.637		.2889						
.650						.1713		
.670								-.4289
.700					.1166			
.725				.1355				
.750						-.3166	-.3422	
.760			.0904					
.775				-.3172	-.3333			
.792		.0732						
.809			-.3215					
.834	.0669							
.879		-.3305						
.850				-.4099	-.4628	-.4196		
.857			-.3952					
.862								-.4922
.865	-.3459							
.879		-.3627						
.900	-.0945			-.4620			-.4919	
.905			-.4486					
.919		-.2623						
[illegible]				-.5133	-.4730	-.5125		
[illegible]			-.3690					
.945		-.3243						
.945	-.3995							
1.000			-.2402		-.3613		-.4805	

ALPHA (5) = 12.032 BETA (3) = 4.249 MACH = 1.2460 Q = 599.73 P = 551.81 RN/L = 3.0130

SECTION (1)LEFT WING BOT SURF DEPENDENT VARIABLE CP

2Y/BW	.2990	.3640	.4270	.5340	.6730	.7800	.8870	.9720
X/CW								
.010	-.4701	-.5520	-.0884	.5322	.5682	.5648	.5463	
.020	.0000	-.3362	.1264	.5185	.5657	.5929	.5643	-.3226
.040		-.2573	.2858					
.050	-.0972			.4691	.5200	.5327	.5332	
.069								-.1419
.080				.4232				

AMES 11-073(OA148) -140A/B/C ORB LEFT WING BOT (XEBL72)

ALPHA (5) = 12.032 BETA (3) = 4.249

SECTION (1)LEFT WING BOT SURF DEPENDENT VARIABLE CP

2Y/BW	.2990	.3640	.4270	.5340	.6730	.7800	.8870	.9720
X/CW								
.081			.2643					
.086		-.0106						
.094	-.0270							
.150				.3885	.4533	.4763	.4193	
.157								-.1137
.163		.2397						
.177			.3173					
.229	.0422							
.246		.1955						
.250				.3783	.4079	.4223	.3507	
.274			.3508					
.345								.0284
.390		.3272						
.400				.3570	.3804		.2876	
.402			.3567					
.403								.0035
.550				.2913	.2807			
.565			-.5405					
.620							.1353	
.637		.2739						
.650						.1595		
.670								-.4298
.700					.1181			
.725				.1279				
.750						-.3222	-.3523	
.760			.0767					
.775				-.3169	-.3359			
.793		.0635						
.808			-.3300					
.834	.0613							
.839		-.3287						
.850				-.4002	-.4678	-.4156		
.857			-.3763					
.862								-.5274
.865	-.3456							
.879		-.3296						
.900	-.1004			-.4652			-.4981	
.905			-.4349					
.919		-.2567						
.950				-.5109	-.4432	-.5167		
.953			-.3517					
.955		-.3174						
.965	-.4243							
1.000			-.2753		-.3060		-.4997	

TABULATED PRESSURE DATA - OA148 (AMES 11-073-1)

AMES 11-073(OA148) -140A/B/C ORB LEFT WING BOT

(XEBL73) (05 AUG 75)

REFERENCE DATA

SREF = 2690.0000 SQ.FT. XMRP = 1076.6800 IN. XO
LREF = 474.8000 IN. YMRP = .0000 IN. YO
BREF = 936.0680 IN. ZMRP = 375.0000 IN. ZO
SCALE = .0300

PARAMETRIC DATA

RUDDER = -5.000 SPDBRK = 55.000
BDFLAP = 16.300 L-ELVN = -10.000
R-ELVN = -10.000 MACH = 1.100

ALPHA (1) = -3.958 BETA (1) = -3.850 MACH = 1.1808 Q = 600.53 P = 707.91 RN/L = 3.1821

SECTION (1)LEFT WING BOT SURF DEPENDENT VARIABLE CP

2Y/BW	.2990	.3640	.4270	.5340	.6730	.7800	.8870	.9720
X/CW								
.010	-.1769	-.3375	-.2786	-.6142	-.7401	-.5597	-.5471	
.020	.0000	-.3170	-.3447	-.7732	-.7848	-.8010	-.8108	-.8424
.040		-.2999	-.4016					
.050	-.1831							
.069				-.7199	-.8044	-.8345	-.8363	
.080								
.091				-.6992				-.9238
.095			-.2829					
.094		-.1464						
.150	-.1840							
.157				-.4618	-.6931	-.7327	-.7633	
.163								
.177		-.0626						-.4874
.223			-.2391					
.246	-.1509							
.250		-.1371						
.274				-.2659	-.5774	-.6639	-.6986	
.345			-.2068					
.390								
.400		-.1571						-.8478
.402				-.1629	-.1676			
.503			-.1256				-.6198	
.560								
.565				-.1276	-.1529			-.7473
.600			-.4549					
.637		-.1064					-.2962	
.650								
.670						-.1581		
.700								
.725					-.2162			-.8388
.750				-.2377				
.760			-.0783			-.5100	-.6762	
.775								
.799		-.1205		-.6070	-.4764			
.809								
.834	-.1823		-.7682					
.839		-.6164						
.850				-.7177	-.6281	-.7020		

AMES 11-073(OA148) -140A/B/C ORB LEFT WING BOT (XE8L73)

ALPHA (1) = -3.958 BETA (1) = -3.850

SECTION (1)LEFT WING BOT SURF DEPENDENT VARIABLE CP

2Y/BW	.2990	.3640	.4270	.5340	.6730	.7800	.8870	.9720
X/CW								
.857			-.6654					
.852								-.9659
.865	-.6473							
.879		-.6625						
.900	-.4785			-.4994			-.5295	
.905			-.4703					
.919		-.4293						
.940				-.4448	-.5619	-.3922		
.953			-.4151					
.955		-.3575						
.965	-.4118							
1.000			-.2674		-.2707		-.2593	

ALPHA (1) = -3.953 BETA (2) = .190 MACH = 1.1008 Q = 600.53 P = 707.91 RN/L = 3.1821

SECTION (1)LEFT WING BOT SURF DEPENDENT VARIABLE CP

2Y/BW	.2990	.3640	.4270	.5340	.6730	.7800	.8870	.9720
X/CW								
.010	-.1342	-.1608	-.0957	-.6103	-.7672	-.5975	-.6095	
.020	.0000	-.1658	-.1342	-.7675	-.8012	-.8402	-.8448	-.9094
.040		-.1484	-.2331					
.050	-.1356			-.6807	-.8102	-.8685	- 8731	
.059								-.8784
.080				-.6304				
.081			-.1789					
.086		-.0541						
.094	-.1350							
.150				-.2811	-.6763	-.7621	-.7921	
.157								-.4867
.193		.0229						
[illegible]			-.1691					
.239	-.1057							
.246		-.0826						
.250				-.1833	-.2177	-.5765	-.7312	
.274			-.1432					
[illegible]								-.8424
[illegible]		-.1064						
[illegible]				-.1226	-.1180		-.3861	
[illegible]			-.1059					
[illegible]								-.6661
[illegible]				-.1192	-.1459			
.565			-.5633					
.600							-.1299	

AMES 11-073(OA148) -140A/B/C ORB LEFT , NG E T (XE8L73)

ALPHA (1) = -3.953 BETA (2) = .190

SECTION (1)LEFT WING BOT SURF DEPENDENT VARIABLE CP

2Y/BW	.2990	.3640	.4270	.5340	.6730	.7800	.8870	.9720
X/CW								
.637		-.1149						
.650						-.1621		
.670								-.5673
.700					-.2179			
.725				-.2275				
.750						-.5112	-.7310	
.760			-.0857					
.775				-.6034	-.5303			
.798		-.1327						
.808			-.7683					
.834	-.1714							
.839		-.6098						
.850				-.6048	-.6142	-.6992		
.857			-.6901					
.862								-.7723
.865	-.6347							
.879		-.6450						
.900	-.4928			-.4944			-.6234	
.905			-.5013					
.919		-.5373						
.950				-.5058	-.7261	-.4310		
.953			-.4409					
.955		-.3914						
.965	-.5833							
1.000			-.3077		-.2706		-.3009	

ALPHA (1) = -3.960 BETA (3) = 4.266 MACH = 1.1008 Q = 600.53 P = 707.91 RN/L = 3.1821

SECTION (1)LEFT WING BOT SURF DEPENDENT VARIABLE CP

2Y/BW	.2990	.3640	.4270	.5340	.6730	.7800	.8870	.9720
X/CW								
.010	-.1332	-.0614	.0610	-.5732	-.7724	-.6370	-.6508	
.020	.0000	-.0538	.0298	-.6968	-.8115	-.8559	-.8790	-.7923
.040		-.0309	-.0900					
.050	-.1011			-.5518	-.7482	-.8312	-.8404	
.069								-.6970
.080				-.2813				
.091			-.0748					
.085		.0420						
.094	-.1051							
.150				-.2099	-.2977	-.5988	-.7816	
.157								-.3613
.163		.1113						

AMES 11-073(OA148) -140A/B/C ORB LEFT WING BOT (XEBL73)

ALPHA (1) = -3.960 BETA (3) = 4.266

SECTION (1)LEFT WING BOT SURF DEPENDENT VARIABLE CP

2Y/BW	.2390	.3640	.4270	.5340	.6730	.7800	.8870	.9720
X/CW								
.177			-.1005					
.229	-.0681							
.246		.0053						
.250				-.1387	-.1890	-.2595	-.4566	
.274			-.0731					
.345								-.5638
.390		-.0381						
.400				-.1036	-.1139		-.2328	
.402			-.0812					
.503								-.4516
.550				-.1254	-.1502			
.565			-.4374					
.600							-.1809	
.637		-.1127						
.650						-.1892		
.670								-.4268
.700					-.2414			
.725				-.2396				
.750						-.5500	-.7063	
.760			-.1110					
.775				-.6224	-.5675			
.798		-.1458						
.808			-.7811					
.834	-.1830							
.839		-.6295						
.850				-.7454	-.6047	-.7287		
.857			-.6920					
.862								-.6573
.865	-.6591							
.879		-.6240						
.900	-.5046			-.6186			-.6565	
.907			-.5181					
.919		-.5790						
.950				-.4729	-.7744	-.4423		
.953			-.4612					
.955		-.5121						
.965	-.7271							
1.000			-.3325		-.3330		-.3796	

AMES 11-073(OA148) -140A/B/C ORB LEFT WING BOT (XE8L73)

ALPHA (2) = .047 BETA (1) = -3.869 MACH = 1.1000 Q = 599.94 P = 708.37 RN/L = 3.1830

SECTION (1)LEFT WING BOT SURF DEPENDENT VARIABLE CP

2Y/BW	.2990	.3640	.4270	.5340	.6730	.7800	.8870	.9720
X/CW								
.010	-.0490	-.0069	.2159	-.3314	-.4642	-.3977	-.3075	
.020	.0000	-.0409	.1342	-.4793	-.5528	-.5567	-.5978	-.4163
.040		-.0288	-.0578					
.050	-.0875			-.3099	-.4559	-.5607	-.5997	
.069								-.4175
.080				-.2540				
.081			-.0659					
.095		.0219						
.094	-.1017							
.150				-.1650	-.2121	-.3671	-.4585	
.157								-.1597
.163		.0893						
.177			-.0817					
.229	-.0766							
.246		-.0352						
.250				-.0619	-.1053	-.0946	-.0882	
.274			-.0459					
.245								-.0714
.330		-.0269						
.400				.0016	.0166		-.0181	
.402			.0084					
.503								-.1216
.550				-.0026	-.0341			
.565			-.5377					
.600							-.1089	
.637		-.0043						
.650						-.0861		
.670								-.4917
.700					-.1344			
.725				-.1382				
.750						-.5021	-.6809	
.760			-.0335					
.775				-.5477	-.3886			
.798		-.0594						
.802			-.7047					
.834	-.1355							
.839		-.5707						
.850				-.6780	-.6175	-.5367		
.857			-.6280					
.862								-.3888
.865	-.5862							
.879		-.6172						
.900	-.4097			-.4743			-.3155	
.905			-.4212					
.919		-.3836						

AMES 11-073(OA148) -140A/B/C ORB LEFT WING BOT (XEBL73)

ALPHA (2) = .047 BETA (1) = -3.869

SECTION (1)LEFT WING BOT SURF DEPENDENT VARIABLE CP

2Y/BW	.2990	.3640	.4270	.5340	.6730	.7800	.8870	.9720
X/CW								
.950				-.3794	-.5444	-.2656		
.953			-.3780					
.955		-.2995						
.965	-.3911							
1.000			-.2351		-.2466		-.1687	

ALPHA (2) = .052 BETA (2) = .177 MACH = 1.1000 Q = 599.94 P = 708.37 RN/L = 3.1830

SECTION (1)LEFT WING BOT SURF DEPENDENT VARIABLE CP

2Y/BW	.2990	.3640	.4270	.5340	.6730	.7800	.8870	.9720
X/CW								
.010	-.1000	-.0112	.2973	.0000	.0000	-.4174	.0000	
.020	.0000	-.0148	.2263	.0000	-.3981	-.5509	-.5906	.0000
.040		-.0007	.0657					
.050	-.1060			.0000	-.3623	-.4464	-.4744	
.069								.0080
.080				.0000				
.091			.0086					
.086		.0562						
.094	-.1082							
.150				.0000	-.0938	-.0638	-.1179	
.157								.0000
.163		.1606						
.177			-.0291					
.229	-.0626							
.246		.0255						
.250				-.0273	-.0531	-.0576	-.1155	
.274			.0012					
.345								-.0774
.390		.0207						
.400				.0076	.0381		-.0178	
.402			.0100					
.503								-.1478
.550				-.0119	-.0280			
.555			-.6231					
.600							-.1237	
.637		-.0059						
.650						-.1029		
.670								-.4645
.700					-.1430			
.725				-.1404				
.750						-.5130	-.7069	
.760			-.0345					

AMES 11-073(OA148) -140A/B/C ORB LEFT WING BOT (XE8L73)

ALPHA (2) = .052 BETA (2) = .177

SECTION : 1:LEFT WING BOT SURF DEPENDENT VARIABLE CP

2Y/BW	.2990	.3640	.4270	.5340	.6730	.7800	.8870	.9720
X/CW								
.775				-.5518	-.4278			
.798		-.0629						
.809			-.7127					
.834	-.1184							
.839		-.5725						
.850				-.6131	-.5985	-.6456		
.857			-.6477					
.862								-.3968
.866	-.5704							
.879		-.5947						
.900	-.4131			-.5019			-.3829	
.905			-.5503					
.919		-.4639						
.950				-.4100	-.7369	-.3157		
.953			-.3714					
.965		-.3755						
.965	-.5828							
1.000			-.2411		-.2444		-.2324	

ALPHA (2) = .046 BETA (3) = 4.245 MACH = 1.1000 Q = 599.94 P = 708.37 RN/L = 3.1830

SECTION : 1:LEFT WING BOT SURF DEPENDENT VARIABLE CP

2Y/BW	.2990	.3640	.4270	.5340	.6730	.7800	.8870	.9720
X/CW								
.010	-.2025	-.0379	.3575	-.0718	-.2967	-.3554	-.2870	
.020	.0000	-.0125	.3154	-.0933	-.2407	-.3459	-.4561	-.1536
.040		.0116	.1764					
.050	-.1491			-.0823	-.2260	-.2575	-.3295	
.069								-.1655
.080				-.0588				
.081			.0912					
.095		.0955						
.094	-.1213							
.150				-.0152	-.0349	-.0749	-.1068	
.157								-.1283
.163		.2003						
.177			.0491					
.223	-.0579							
.245		.0847						
.252				.0092	-.0334	-.0535	-.1016	
.274			.0517					
.345								-.1187
.335		.0704						

AMES 11-073(OA148) -140A/B/C ORB LEFT WING BOT (XE8L73)

ALPHA (2) = .046 BETA (3) = 4.245

SECTION (1:LEFT WING BOT SURF DEPENDENT VARIABLE CP

2Y/BW	.2990	.3640	.4270	.5340	.6730	.7800	.8870	.9720
X/CW								
.400				.0256	.0295		-.0410	
.402			.0406					
.503								-.1844
.550				-.0229	-.0473			
.565			-.5005					
.600							-.1495	
.637		-.0151						
.650						-.1321		
.670								-.4443
.700					-.1750			
.725				-.1569				
.750						-.5317	-.7254	
.760			-.0537					
.775				-.5710	-.4594			
.798		-.0830						
.808			-.7270					
.834	-.1294							
.839		-.5660						
.850				-.6969	-.5838	-.7157		
.857			-.6385					
.862								-.4009
.865	-.5857							
.879		-.5598						
.900	-.4144			-.5765			-.4350	
[illegible]			-.4581					
.919		-.5260						
.940				-.4386	-.7459	-.3614		
.943			-.4143					
.955		-.4798						
.955	-.6887							
1.000			-.2970		-.2880		-.2845	

ALPHA (3) = 4.012 BETA (1) = -3.872 MACH = 1.0998 Q = 599.99 P = 708.60 RN/L = 3.1808

SECTION (1:LEFT WING BOT SURF DEPENDENT VARIABLE CP

2Y/BW	.2990	.3640	.4270	.5340	.6730	.7800	.8870	.9720
X/CW								
.010	-.0876	-.0553	.4702	.2031	.1027	.1940	.2549	
.020	.0000	-.0053	.4143	.0612	.0894	.1006	.1087	.0772
.040		.0280	.2439					
.050	-.0181			.0583	.0446	.0771	.1040	
.060								.0443
.080				.0469				

AMES 11-073(OA148) -140A/B/C ORB LEFT WING BOT (XEBL73)

ALPHA (3) = 4.012 BETA (1) = -3.872

SECTION (1)LEFT WING BOT SURF DEPENDENT VARIABLE CP

2Y/BW	.2990	.3640	.4270	.5340	.6730	.7800	.8870	.9720
X/CW								
.081			.1361					
.085		.1193						
.094	-.0410							
.150				.1123	.1246	.1380	.1008	
.157								-.0532
.163		.2409						
.177			.0897					
.229	-.0410							
.246		.1008						
.250				.1483	.1413	.1345	.0691	
.274			.1523					
.345								-.0057
.350		.1629						
.400				.1647	.1689		.0829	
.470			.1837					
.503								-.0772
.550				.0918	.0691			
.565			-.5951					
.600							-.0501	
.637		.0948						
.650						-.0158		
.670								-.5661
.700					-.0884			
.725				-.0760				
.750						-.5040	-.5855	
.760			-.0082					
.775				-.5049	-.4172			
.799		-.0180						
.809			-.6422					
.834	-.0903							
.839		-.5462						
.850				-.6534	-.5345	-.6726		
.857			-.6106					
.870								-.3759
.885	-.5613							
.879		-.5588						
.900	-.3553			-.4784			-.3138	
.905			-.3971					
.919		-.4034						
.950				-.3273	-.5080	-.2813		
.953			-.3400					
.955		-.2821						
.965	-.5065							
1.000			-.2012		-.2202		-.1987	

DATE 10 FEB 76 TABULATED PRESSURE DATA - OA148 (AMES 11-073-1) PAGE 2921

AMES 11-073(OA148) -140A/B/C ORB LEFT WING BOT (XEBL73)

ALPHA (3) = 4.014 BETA (2) = .182 MACH = 1.0998 Q = 599.69 P = 708.60 RN/L = 3.1803

SECTION (1)LEFT WING BOT SURF DEPENDENT VARIABLE CP

2Y/BW	.2990	.3640	.4270	.5340	.6730	.7800	.8870	.9720
X/CW								
.010	-.1638	-.1977	.4436	.2870	.1928	.2796	.3085	
.020	.0000	-.0825	.4327	.1665	.1685	.1635	.1790	.0083
.040		-.0447	.2992					
.050	-.0798			.1368	.1126	.1156	.1537	
.069								.0040
.080				.1169				
.081			.1902					
.086		.1036						
.094	-.0820							
.150				.1442	.1492	.1561	.1153	
.157								-.0698
.163		.2692						
.177			.1478					
.229	-.0580							
.246		.1428						
.250				.1663	.1452	.1549	.0734	
.274			.1671					
.345								-.0431
.390		.1711						
.400				.1737	.1659		.0791	
.402			.1856					
.503								-.1092
.550				.0998	.0723			
.565			-.6765					
.600							-.0570	
.637		.1028						
.640						-.0291		
.670								-.6062
.700					-.0877			
.725				-.0651				
.750						-.5225	-.5974	
.760			-.0033					
.775				-.5157	-.3835			
.798		-.0194						
.808			-.6446					
.834	-.0751							
.839		-.5341						
.850				-.6456	-.5475	-.6697		
.857			-.5989					
.862								-.2997
.865	-.5587							
.879		-.5303						
.900	-.3293			-.5417			-.3553	
.905			-.4202					
.919		-.4599						

AMES 11-073(OA148) -140A/B/C ORB LEFT WING BOT (XEBL73)

ALPHA (3) = 4.014 BETA (2) = .182

SECTION (1)LEFT WING BOT SURF DEPENDENT VARIABLE CP

2Y/BW	.2990	.3640	.4270	.5340	.6730	.7800	.8870	.9720
X/CW								
.950				-.3480	-.5642	-.3156		
.953			-.3448					
.955		-.3921						
.965	-.6197							
1.000			-.2337		-.2261		-.2352	

ALPHA (3) = 4.006 BETA (3) = 4.238 MACH = 1.0998 Q = 599.99 P = 708.60 RN/L = 3.1803

SECTION (1)LEFT WING BOT SURF DEPENDENT VARIABLE CP

2Y/BW	.2990	.3640	.4270	.5340	.6730	.7800	.8870	.9720
X/CW								
.010	-.3573	-.3324	.4090	.3764	.2701	.3140	.3346	
.020	.0000	-.1747	.4376	.2755	.2302	.2280	.2142	-.1310
.040		-.1244	.3372					
.050	-.1692			.2213	.1676	.1641	.1721	
.069								-.0976
.080				.1915				
.081			.2552					
.086		.0769						
.094	-.1411							
.150				.1789	.1744	.1665	.1158	
.157								-.1091
.163		.2837						
.177			.1996					
.229	-.0769							
.246		.1893						
.250				.1698	.1518	.1524	.0641	
.274			.1884					
.345								
.350		.1934						-.1110
.400				.1607	.1584		.0567	
.402			.1808					
.503								
.550				.0899	.0597			-.1628
.555			-.5719					
.600								
.637		.0873					-.0819	
.650								
.670					-.0528			
.700								-.6249
.725				-.0881				
.750				-.0678				
.760					-.5420	-.6156		
			-.0221					

AMES 11-073(OA148) -140A/B/C ORB LEFT WING BOT (XEBL73)

ALPHA (3) = 4.006 BETA (3) = 4.238

SECTION (1)LEFT WING BOT SURF DEPENDENT VARIABLE CP

2Y/BW	.2990	.3640	.4270	.5340	.6730	.7800	.8870	.9720
X/CW								
.775				-.5353	-.4069			
.798		-.0350						
.808			-.6639					
.834	-.0848							
.839		-.5402						
.850				-.6517	-.5387	-.6635		
.857			-.5838					
.862								-.3552
.865	-.5610							
.879		-.4958						
.900	-.3382			-.6725			-.3867	
.905			-.5039					
.919		-.4989						
.950				-.3852	-.6634	-.5632		
.953			-.3742					
.955		-.4984						
.965	-.6682							
1.000			-.2707		-.2655		-.2951	

ALPHA (4) = 7.976 BETA (1) = -3.868 MACH = 1.1000 Q = 599.94 P = 708.36 RN/L = 3.1794

SECTION (1)LEFT WING BOT SURF DEPENDENT VARIABLE CP

2Y/BW	.2990	.3640	.4270	.5340	.6730	.7800	.8870	.9720
X/CW								
.010	-.1209	-.3760	.4631	.6153	.5776	.6362	.6172	
.020	.0000	-.1473	.5345	.4925	.5078	.5160	.5047	-.0192
.040		-.0899	.4703					
.050	.0103			.4030	.4094	.4135	.4086	
.069								.0444
.080				.3540				
.081			.3682					
.086		.1052						
.094	.0118							
.150				.3280	.3424	.3488	.2879	
.157								-.0464
.163		.3591						
.177			.3082					
.229	.0120							
.246		.2708						
.250				.3047	.2974	.2918	.2231	
.274			.2970					
[illegible]								.0326
.300		.2892						

AMES 11-073(OA148) -140A/B/C ORB LEFT WING BOT (XEBL73)

ALPHA (4) = 7.976 BETA (1) = -3.868

SECTION (1)LEFT WING BOT SURF DEPENDENT VARIABLE CP

2Y/BW	.2930	.3640	.4270	.5340	.6730	.7800	.8870	.9720
X/CW								
.400				.2690	.2709		.1809	
.402			.2932					
.503								-.0299
.550				.1784	.1611			
.565			-.6352					
.600							.0261	
.637		.1747						
.650						.0446		
.670								-.5535
.700					-.0319			
.725				-.0142				
.750						-.4840	-.5544	
.760			-.0097					
.775				-.4747	-.5250			
.798		-.0229						
.808			-.5902					
.834	-.0514							
.839		-.5169						
.850				-.6153	-.5217	-.6264		
.857			-.5740					
.862								
.865	-.5446							-.4354
.879		-.4959						
.900	-.2819			-.6310			-.6636	
.905			-.4850					
.919		-.4338						
.950				-.3329	-.5215	-.6867		
.953			-.3156					
.965		-.3650						
.965	-.5434							
1.000			-.2137		-.2608		-.3157	

ALPHA (4) = 7.984 BETA (2) = .174 MACH = 1.1000 Q = 599.94 P = 708.36 RN/L = 3.1794

SECTION (1)LEFT WING BOT SURF DEPENDENT VARIABLE CP

2Y/BW	.2930	.3640	.4270	.5340	.6730	.7800	.8870	.9720
X/CW								
.010	-.3344	-.6397	.3217	.6070	.5714	.6079	.5818	
.020	.0000	-.3141	.4427	.5210	.5160	.5286	.4992	-.1626
.040		-.2362	.4515					
.050	-.0963			.4262	.4241	.4359	.4131	
.069								-.0708
.080				.3723				

AMES 11-073(OA148) -140A/B/C ORB LEFT WING BOT (XE8L73)

ALPHA (4) = 7.984 BETA (2) = .174

SECTION (1)LEFT WING BOT SURF DEPENDENT VARIABLE CP

2Y/BW	.2990	.3640	.4270	.5340	.6730	.7800	.8870	.9720
X/CW								
.081			.3834					
.086		.0099						
.094	-.0520							
.150				.3359	.3551	.3578	.2878	
.157								-.0827
.163		.3467						
.177			.3312					
.229	-.0284							
.246		.2719						
.250				.3169	.3158	.3006	.2241	
.274			.3093					
.345								-.0214
.390		.2977						
.400				.2706	.2735		.1678	
.402			.2909					
.503								-.0681
.550				.1805	.1609			
.565			-.7041					
.600							.0142	
.637		.1795						
.650						.0265		
.670								-.5744
.700					-.0133			
.725				.0039				
.750						-.4967	-.5579	
.760			.0004					
.775				-.4819	-.5291			
.798		-.0015						
.808			-.5902					
.834	-.0398							
.839		-.5033						
.850				-.6120	-.4704	-.6180		
.857			-.5604					
.882								-.4616
.885	-.5389							
.899		-.4678						
.900	-.2635			-.5337			-.6874	
.905			-.5527					
.919		-.4390						
.920				-.3411	-.5052	-.6936		
.953			-.3135					
.955		-.4566						
.965	-.5993							
1.000			-.2081		-.2428		-.3499	

AMES 11-073(OA148) -140A/B/C GRB LEFT WING BOT (XEBL73)

ALPHA (4) = 7.984 BETA (3) = 4.233 MACH = 1.1000 Q = 599.94 P = 708.36 RN/L = 3.1794

SECTION (1)LEFT WING BOT SURF DEPENDENT VARIABLE CP

2Y/BW	.2990	.3640	.4270	.5340	.6730	.7800	.8870	.9720
X/CW								
.010	-.5579	-.4557	.1933	.5945	.5473	.5539	.5199	
.020	.0000	-.3603	.3488	.5310	.5045	.5010	.4696	-.3385
.040		-.2867	.4298					
.050	-.1915			.4532	.4252	.4150	.3939	
.069								-.2003
.080				.3968				
.081			.3974					
.086		-.0228						
.094	-.1301							
.150				.3457	.3491	.3424	.2683	
.157								-.1262
.163		.3422						
.177			.3492					
.229	-.0692							
.246		.3005						
.250				.3087	.3016	.2866	.1987	
.274			.3139					
.345								-.0821
.390		.3069						
.400				.2571	.2583		.1432	
.402			.2818					
.503								-.1210
.550				.1670	.1444			
.555			-.6465					
.600							-.0164	
.647		.1687						
.650						.0055		
.670								-.6012
.700					-.0128			
.725				-.0003				
.750						-.5102	-.5617	
.760			-.0111					
.775				-.5008	-.5224			
.798		-.0124						
.809			-.5993					
.934	-.0501							
.839		-.5141						
.850				-.6121	-.4447	-.6143		
.857			-.5416					
.862								-.4871
.865	-.5432							
.879		-.4406						
.900	-.2802			-.5461			-.7058	
.905			-.5752					
.919		-.4542						

AMES 11-073(OA148) -140A/B/C ORB LEFT WING BOT (XE8L73)

ALPHA (4) = 7.984 BETA (3) = 4.233

SECTION (1)LEFT WING BOT SURF DEPENDENT VARIABLE CP

2Y/BW	.2990	.3640	.4270	.5340	.6730	.7800	.8870	.9720
X/CW								
.950				-.3615	-.5479	-.6429		
.953			-.3585					
.955		-.4972						
.963	-.6385							
1.000			-.1923		-.2653		-.4128	

ALPHA (5) = 12.067 BETA (1) = -3.848 MACH = 1.0997 Q = 599.84 P = 708.61 RN/L = 3.1785

SECTION (1)LEFT WING BOT SURF DEPENDENT VARIABLE CP

2Y/BW	.2990	.3640	.4270	.5340	.6730	.7800	.8870	.9720
X/CW								
.010	-.2848	-.5733	.2419	.7494	.7454	.7369	.6873	
.020	.0000	-.2047	.4606	.7017	.7152	.7102	.6645	-.1959
.040		-.1247	.5569					
.050	.0157			.6052	.6199	.6157	.5906	
.069								-.0397
.080				.5442				
.081			.5096					
.086		.1916						
.094	.0639							
.150				.4836	.5058	.5081	.4332	
.157								-.0760
.163		.4684						
.177			.4568					
.229	.0861							
.246		.4054						
.250				.4315	.4390	.4272	.3508	
.274			.4213					
.345								.0782
.390		.4075						
.400				.3712	.3717		.2684	
.402			.3892					
.503								.0219
.550				.2579	.2402			
.555			-.6857					
.620							.0955	
.637		.2552						
.650						.1235		
[illegible]								-.5198
[illegible]					.0605			
.745				.0704				
.750						-.4475	-.5078	
.763			.0086					

AMES 11-073(OA148) -140A/B/C ORB LEFT WING BOT (XEBL73)

ALPHA (5) = 12.067 BETA (1) = -3.848

SECTION (1)LEFT WING BOT SURF DEPENDENT VARIABLE CP

2Y/BW	.2990	.3640	.4270	.5340	.6730	.7800	.8870	.9720
X/CW								
.775				-.4699	-.4832			
.798		-.0019						
.808			-.4846					
.834	-.0070							
.839		-.4992						
.850				-.5797	-.6130	-.5865		
.857			-.5446					
.862								-.4713
.865	-.5063							
.879		-.4643						
.900	-.2138			-.6385			-.6294	
.905			-.6203					
.919		-.3843						
.950				-.4966	-.6280	-.6704		
.953			-.4447					
.955		-.4609						
.965	-.5292							
1.000			-.1984		-.2832		-.4758	

ALPHA (5) = 12.077 BETA (2) = .180 MACH = 1.0997 Q = 599.84 P = 708.61 RN/L = 3.1785

SECTION (1)LEFT WING BOT SURF DEPENDENT VARIABLE CP

2Y/BW	.2990	.3640	.4270	.5340	.6730	.7800	.8870	.9720
X/CW								
.010	-.4982	-.6484	-.0072	.6675	.6805	.6428	.5971	
.020	.0000	-.3314	.2786	.6668	.6738	.6574	.6074	-.3460
.040		-.2450	.4747					
.060	-.0907			.5994	.6110	.5902	.5520	
.069								-.1515
.080				.5473				
.081			.4875					
.086		.0811						
.094	-.0197							
.150				.4835	4996	.4972	.4109	
.157								-.0942
.163		.4118						
.177			.4549					
.229	.0398							
.246		.3794						
.250				.4330	.4325	.4163	.3315	
.274			.4272					
.345								.0129
.390		.4030						

AMES 11-073(OA148) -140A/B/C ORB LEFT WING BOT (XEBL73)

ALPHA (5) = 12.077 BETA (2) = .180

SECTION (1)LEFT WING BOT SURF DEPENDENT VARIABLE CP

2Y/BW	.2990	.3640	.4270	.5340	.6730	.7800	.8870	.9720
X/CW								
.400				.3668	.3652		.2444	
.402			.3890					
.503								-.0203
.550				.2569	.2335			
.565			-.7530					
.600								
.637		.2531					.0773	
.650								
.670						.1149		
.700								-.6331
.725					.0592			
.750				.0728				
.760						-.4594	-.5147	
.775			.0143					
.798				-.4649	-.4845			
.808		.0114						
.834	-.0004		-.5128					
.839								
.850		-.4813						
.857				-.5604	-.6036	-.5803		
.862			-.5250					
.865	-.5088							-.5067
.879								
.900	-.2110	-.4386						
.905				-.6415				
.919			-.5763				-.6493	
.950		-.3947						
.953				-.5432	-.6105	-.6912		
.965			-.4976					
.965	-.5561	-.4546						
1.000			-.2123		-.2749		-.5448	

ALPHA (5) = 12.076 BETA (3) = 4.245 MACH = 1.0997 Q = 599.84 P = 708.61 RN/L = 3.1785

SECTION (1)LEFT WING BOT SURF DEPENDENT VARIABLE CP

2Y/BW	.2990	.3640	.4270	.5340	.6730	.7800	.8870	.9720
X/CW								
.010	-.6512	-.6924	-.1375	.5722	.5867	.5202	.4760	
.020	.0000	-.4621	.1494	.6106	.6047	.5852	.5174	-.4793
.040		-.3692	.4001					
.050	-.1951			.5704	.5664	.5430	.4927	
.069								
.091				.5209				-.2688

AMES 11-073(OA148) -140A/B/C ORB LEFT WING BOT (XEBL73)

ALPHA (5) = 12.076 BETA (3) = 4.245

SECTION (1)LEFT WING BOT SURF DEPENDENT VARIABLE CP

2Y/BW	.2990	.3640	.4270	.5340	.6730	.7800	.8870	.9720
X/CW								
.081			.4621					
.086		-.0255						
.094	-.0981							
.150				.4600	.4741	.4639	.3718	
.157								-.1551
.163		.3588						
.177			.4438					
.229	-.0041							
.246		.3616						
.310				.4083	.4069	.3898	.2975	
.314			.4120					
.340								-.0653
.390		.3915						
.400				.3428	.3423		.2104	
.402			.3667					
.403								-.0871
.540				.2424	.2151			
.545			-.6931					
.610							.0507	
.637		.2366						
.650						.0938		
.670								-.5765
.700					.0430			
.725				.0609				
.750						-.4837	-.5253	
.760			-.0019					
.775				-.4779	-.4980			
.798		-.0035						
.808			-.5184					
.834	-.0180							
.839		-.4897						
.850				-.5666	-.5926	-.5819		
.857			-.5151					
.862								-.5767
.865	-.5122							
.879		-.3923						
.910	-.2223			-.6450			-.6731	
.915			-.5165					
.919		-.4011						
.940				-.6152	-.5518	-.6943		
.943			-.4998					
.955		-.4508						
.974	-.6011							
1.000			-.2415		-.3197		-.6193	

AMES 11-073(OA148) -140A/B/C ORB LEFT WING BOT (XEBL74) (05 AUG 75)

REFERENCE DATA

SREF = 2800.0000 SQ.FT. XMRP = 1076.6800 IN. XO
LREF = 474.8000 IN. YMRP = .0000 IN. YO
BREF = 936.0980 IN. ZMRP = 375.0000 IN. ZO
SCALE = .0300

PARAMETRIC DATA

RUDDER = -5.000 SPDBRK = 55.000
BDFLAP = 16.300 L-ELVN = -10.000
R-ELVN = -10.000 MACH = .900

ALPHA (1) = -3.998 BETA (1) = -3.854 MACH = .90080 Q = 600.60 P = 1057.3 RN/L = 3.5738

SECTION (1)LEFT WING BOT SURF DEPENDENT VARIABLE CP

2Y/BW	.2990	.3640	.4270	.5340	.6730	.7800	.8870	.9720
X/CW								
.010	-.1315	-.2961	-.5031	-1.0932	-1.2591	-1.0243	-1.0569	
.020	.0000	-.2535	-.5410	-1.2699	-1.3187	-1.3371	-1.3472	-1.3353
.040		-.2279	-.6661					
.060	-.1260							
.069				-1.1674	-1.3142	-1.3793	-1.3823	
.080								-1.1990
.081				-1.0680				
.086			-.4856					
.089		-.1124						
.094	-.1140							
.150								
.157				-.6313	-1.1543	-1.2352	-1.2614	
.163		-.1657						-.5966
.177								
.229	-.0472		-.4711					
.245		-.3127						
.250								
.274				-.4048	-.4959	-.9720	-1.1788	
.345			-.3740					
.370		-.3359						-.7128
.420								
.422				-.2708	-.2700		-.3950	
.503			-.2567					
.550								
.555				-.3070	-.2353			-.6391
.600			-.7691					
.637		-.2907					-.1944	
.650								
.670						-.2109		
.700								
.735					-.2467			-.8338
.750				-.2617				
.750								
.775			-.1897			-.7118	-1.0269	
.775								
.788		-.2580		-.6073	-.8113			
.808								
.808			-.8830					
.830	-.2954							
.839		-.9311						
.850								
				-.4747	-.6819	-.5919		

AMES 11-073(OA148) -140A/B/C ORB LEFT WING BOT (XEBL74)

ALPHA (1) = -3.998 BETA (1) = -3.854

SECTION (1)LEFT WING BOT SURF DEPENDENT VARIABLE CP

X/CW \ 2Y/BW	.2990	.3640	.4270	.5340	.6730	.7800	.8870	.9720
.857			-.5182					
.862								
.865	-.9545							-1.1114
.879		-.4832						
.900	-.5634			-.4885			-.5389	
.905			-.4920					
.919		-.3894						
.950				-.5187	-.4714	-.5195		
.953			-.4690					
.955		-.3678						
.965	-.2818							
1.000			-.3252		-.2465		-.3433	

ALPHA (1) = -3.915 BETA (2) = .189 MACH = .90080 Q = 600.60 P = 1057.3 RN/L = 3.5738

SECTION (1)LEFT WING BOT SURF DEPENDENT VARIABLE CP

X/CW \ 2Y/BW	.2990	.3640	.4270	.5340	.6730	.7800	.8870	.9720
.010	-.0369	-.1226	-.3112	-1.0744	-1.2799	-1.0712	-1.1115	
.020	.0000	-.0275	-.3676	-1.2339	-1.3397	-1.3642	-1.1290	-.6830
.040		-.0659	-.4594					
.050	-.0522			-1.1092	-1.2691	-1.2938	-1.1300	
.069								
.080				-.6918				-.6125
.081			-.3793					
.086		-.0202						
.094	-.0526							
.150				-.5046	-.6695	-1.0264	-.9544	
.157								
.163		-.0830						-.3651
.177			-.4016					
.203	-.0092							
.245		-.2329						
.255				-.3637	-.3895	-.6370	-.8179	
.274			-.3216					
.345								
.390		-.2832						-.4646
.400				-.2648	-.2805		-.6104	
.402			-.2379					
.503								
.511				-.3091	-.3261			-.4641
.555			-.7533					
.600							-.3677	

AMES 11-073(OA148) -140A/B/C ORB LEFT WING BOT (XEBL74)

ALPHA (1) = -3.915 BETA (2) = .189

SECTION (1)LEFT WING BOT SURF DEPENDENT VARIABLE CP

2Y/BW	.2990	.3540	.4270	.5340	.6730	.7800	.8870	.9720
X/CW								
.637		-.2887						
.650						-.2944		
.670								-.7869
.700					-.3254			
.725				-.3260				
.750						-.7651	-.8010	
.760			-.2282					
.775				-.5872	-.8840			
.798		-.3057						
.823			-.6482					
.834	-.3341							
.839		-.9223						
.850				-.4636	-.6522	-.5796		
.857			-.4889					
.862								-.8560
.865	-.9804							
.879		-.4936						
.900	-.6302			-.4755			-.5472	
.905			-.4872					
.919		-.4248						
.950				-.5147	-.4533	-.5159		
.953			-.4829					
.965		-.3880						
.965	-.3082							
1.000			-.3574		-.2772		-.4254	

ALPHA (1) = -3.961 BETA (3) = 4.266 MACH = .90080 Q = 600.60 P = 1057.3 RN/L = 3.5738

SECTION (1)LEFT WING BOT SURF DEPENDENT VARIABLE CP

2Y/BW	.2990	.3540	.4270	.5340	.6730	.7800	.8870	.9720
X/CW								
.010	.0171	.0053	-.1513	-1.0380	-1.2865	-1.0971	-.9290	
.020	.0000	.0157	-.2066	-1.0887	-1.3126	-1.1551	-.8913	-.6002
.040		.0273	-.3004					
.050	-.0092			-.6871	-1.2399	-1.1226	-.8927	
.069								-.5672
.080				-.5353				
.081			-.2955					
.086		.0429						
.094	-.0097							
.102				-.4292	-.5017	-.9211	-.8650	
.152								-.3326
.163		-.0212						

AMES 11-073(OA148) -140A/B/C ORB LEFT WING BOT (XEBL74)

ALPHA (1) = -3.961 BETA (3) = 4.266

SECTION (1)LEFT WING BOT SURF DEPENDENT VARIABLE CP

2Y/BW	.2990	.3640	.4270	.5340	.6730	.7800	.8870	.9720
X/CW								
.177			-.3163					
.229	.0271							
.246		-.1935						
.250				-.3231	-.3407	-.5713	-.7866	
.274			-.2758					
.345								-.4176
.370		-.2389						
.400				-.2510	-.2610		-.5841	
.420			-.2284					
.503								-.4262
.550				-.3069	-.3564			
.585			-.7682					
.600							-.3554	
.627		-.2839						
.650						-.3283		
.670								-.7277
.700					-.4036			
.725				-.3729				
.750						-.7284	-.9783	
.760			-.2893					
.775				-.5448	-.8272			
.798		-.3385						
.808			-.8185					
.834	-.3522							
.839		-.9395						
.850				-.4345	-.5758	-.5433		
.857			-.4620					
.862								
.855	-1.0023							-.7571
.879		-.4741						
.900	-.6216			-.4701			-.5389	
.905			-.4760					
.919		-.4098						
.950				-.4932	-.4181	-.5172		
.953			-.4690					
.955		-.3925						
.955	-.3515							
1.000			-.3606		-.3027		-.4440	

AMES 11-073(OA148) -140A/B/C ORB LEFT WING BOT (XE8L74)

ALPHA (2) = .055 BETA (1) = -3.868 MACH = .90127 Q = 600.67 P = 1056.4 RN/L = 3.5726

SECTION (1)LEFT WING BOT SURF DEPENDENT VARIABLE CP

2Y/BW	.2990	.3640	.4270	.5340	.6730	.7800	.8870	.9720
X/CW								
.010	.0393	.0891	.0924	-.6751	-.8397	-.7712	-.6605	
.020	.0000	.0737	-.0122	-.6471	-.8038	-.7988	-.9420	-.3339
.040		.0846	-.1783					
.050	.0086			-.5390	-.6209	-.7309	-.8138	
.069								-.3791
.080				-.3649				
.081			-.2049					
.086		.0922						
.094	-.0054							
.150				-.2184	-.2286	-.2745	-.2802	
.157								-.2118
.163		.0227						
.177			-.1826					
.229	.0307							
.246		-.1351						
.250				-.1576	-.2131	-.2420	-.2567	
.274			-.1323					
.345								-.1621
.390		-.1157						
.400				-.1319	-.1423		-.1956	
.402			-.0934					
.503								-.2040
.550				-.2028	-.2162			
.565			-.8396					
.600							-.2664	
.637		-.1942						
.640						-.2883		
.670								-.7102
.700					-.2980			
.725				-.3033				
.750						-.6263	-1.1229	
.760			-.1840					
.775				-.6050	-.8257			
.798		-.2309						
.809			-.8977					
.834	-.2590							
.839		-.9459						
.850				-.4618	-.5582	-.5375		
.857			-.4263					
.862								-.5215
.865	-.9510							
.879		-.4763						
.900	-.5664			-.5072			-.4228	
.905			-.4725					
.919		-.3771						

AMES 11-073(OA148) -140A/B/C ORB LEFT WING BOT (XE6L74)

ALPHA (2) = .055 BETA (1) = -3.868

SECTION (1)LEFT WING BOT SURF DEPENDENT VARIABLE CP

2Y/BW	.2990	.3640	.4270	.5340	.6730	.7800	.8870	.9720
X/CW								
.950				-.5272	-.4572	-.4988		
.953			-.4616					
.955		-.3643						
.965	-.2798							
1.000			-.3140		-.2514		-.2826	

ALPHA (2) = .084 BETA (2) = .180 MACH = .90127 Q = 600.67 P = 1056.4 RN/L = 3.5726

SECTION (1)LEFT WING BOT SURF DEPENDENT VARIABLE CP

2Y/BW	.2990	.3640	.4270	.5340	.6730	.7800	.8870	.9720
X/CW								
.010	.0336	.1125	.1795	-.4816	-.7071	-.7382	-.6515	
.020	.0000	.1139	.0989	-.4823	-.6100	-.6518	-.8261	-.3529
.040		.1260	-.0617					
.050	.0226			-.3704	-.4762	-.5676	-.7056	
.059								-.3460
.060				-.2895				
.081			-.1282					
.086		.1357						
.094	.0152							
.150				-.1916	-.2029	-.2373	-.3208	
.157								-.2279
.163		.0777						
.177			-.1377					
.229	.0475							
.245		-.0976						
.250				-.1412	-.1927	-.2316	-.2683	
.274			-.1128					
.345								-.1590
.390		-.0957						
.400				-.1326	-.1530		-.2160	
.402			-.0907					
.503								-.2002
.550				-.2098	-.2279			
.565			-.8672					
.600							-.2797	
.637		-.2021						
.650						-.3010		
.670								-.6942
.700					-.3211			
.725				-.3007				
.750						-.6244	-1.1164	
.760			-.1911					

AMES 11-073(OA148) -140A/B/C ORB LEFT WING BOT (XE8L74)

ALPHA (2) = .084 BETA (2) = .180

SECTION (1)LEFT WING BOT SURF DEPENDENT VARIABLE CP

2Y/BW	.2990	.3640	.4270	.5340	.6730	.7800	.8870	.9720
X/CW								
.775				-.5881	-.8169			
.798		-.2316						
.808			-.8952					
.834	-.2718							
.839		-.9496						
.850				-.4504	-.6098	-.5251		
.857			-.4806					
.862								-.4737
.865	-.9267							
.879		-.4928						
.900	-.6299			-.4850			-.4347	
.905			-.4758					
.919		-.4164						
.950				-.5119	-.4470	-.4942		
.953			-.4856					
.955		-.3922						
.965	-.2953							
1.000			-.3565		-.2654		-.3253	

ALPHA (2) = .055 BETA (3) = 4.248 MACH = .90127 Q = 600.67 P = 1056.4 RN/L = 3.5726

SECTION (1)LEFT WING BOT SURF DEPENDENT VARIABLE CP

2Y/BW	.2990	.3640	.4270	.5340	.6730	.7800	.8870	.9720
X/CW								
.010	-.0030	.0903	.2349	-.3038	-.5203	-.5860	-.5691	
.020	.0000	.1154	.1721	-.3611	-.4231	-.5081	-.6591	-.3028
.040		.1346	.0227					
.050	.0219			-.2548	-.3618	-.4218	-.5078	
.069								-.3246
.080				-.2138				
.081			-.0640					
.086		.1541						
.094	.0203							
.150				-.1501	-.1738	-.2087	-.3125	
.157								-.2254
.163		.1147						
.177			-.0982					
.229	.0530							
.246		-.0526						
.250				-.1209	-.1695	-.2049	-.2555	
.274			-.0899					
.345								-.1519
.310		-.0670						

AMES 11-073(OA148) -140A/B/C ORB LEFT WING BOT (XEBL74)

ALPHA (2) = .055 BETA (3) = 4.248

SECTION (1)LEFT WING BOT SURF DEPENDENT VARIABLE CP

2Y/BW	.2990	.3640	.4270	.5340	.6730	.7800	.8870	.9720
X/CW								
.400				-.1291	-.1514		-.2185	
.402			-.0863					
.503								-.1945
.550				-.2147	-.2357			
.555			-.8647					
.600								
.637		-.1917					-.2826	
.650								
.670						-.3361		
.700								-.6744
.725					-.3420			
.750				-.3051				
.760						-.6097	-1.0708	
.775			-.1954					
.798				-.5455	-.8116			
.809		-.2520						
.834			-.8436					
.839	-.2894							
.850		-.9291						
.857				-.4326	-.5444	-.4908		
.862			-.4612					
.865	-.9316							-.3540
.879		-.4778						
.900	-.6281							
.905				-.4592			-.4422	
.919			-.4737					
.920		-.4146						
.943				-.4887	-.4184	-.4747		
.945			-.4683					
.965		-.3918						
1.000	-.3331							
			-.3309		-.2952		-.3303	

ALPHA (3) = 4.001 BETA (1) = -3.875 MACH = .90140 Q = 601.01 P = 1056.6 RN/L = 3.5771

SECTION (1)LEFT WING BOT SURF DEPENDENT VARIABLE CP

2Y/BW	.2990	.3640	.4270	.5340	.6730	.7800	.8870	.9720
X/CW								
.010	.0244	.1248	.4007	.0915	.0171	.1069	.1230	
.020	.0000	.1694	.3352	-.0306	-.0085	-.0098	-.0329	-.1005
.040		.1966	.1623					
.050	.0608			-.0401	-.0545	-.0572	-.0645	
.069								-.1604
.080				-.0420				

AMES 11-073(OA148) -140A/B/C ORB LEFT WING BOT (XE8L74)

ALPHA (3) = 4.001 BETA (1) = -3.875

SECTION (1)LEFT WING BOT SURF DEPENDENT VARIABLE CP

2Y/BW	.2990	.3640	.4270	.5340	.6730	.7808	.8870	.9720
X/CW								
.081			.0613					
.086		.2312						
.094	.0607							
.150				-.0037	-.0111	-.0227	-.0855	
.157								-.1711
.163		.1952						
.177			.0200					
.229	.1019							
.246		.0362						
.250				.0046	-.0292	-.0563	-.1110	
.274			.0203					
.345								-.1875
.390		.0267						
.400				-.0215	-.0349		-.1263	
.402			.0155					
.403								-.2305
.550				-.1257	-.1463			
.565			-.9082					
.600							-.2945	
.637		-.1202						
.650						-.2842		
.670								-.7349
.700					-.3178			
.725				-.2320				
.750						-.6097	-1.0578	
.760			-.1374					
.775				-.5624	-.8520			
.798		-.1713						
.809			-.8828					
.834	-.1980							
.839		-.9176						
.850				-.4425	-.5706	-.4733		
.857			-.4512					
.862								-.2524
.865	-.9164							
.879		-.4475						
.900	-.5300			-.4733			-.4217	
.905			-.4377					
.919		-.3444						
.950				-.5048	-.4144	-.3758		
.953			-.4099					
.955		-.3572						
[illegible]	-.2431							
1.000			-.2795		-.2024		-.2055	

AMES 11-073(OA148) -140A/B/C ORB LEFT WING BOT (XEBL74)

ALPHA (3) = 4.079 BETA (2) = .183 MACH = .90140 Q = 601.01 P = 1056.6 RN/L = 3.5771

SECTION (1)LEFT WING BOT SURF DEPENDENT VARIABLE CP

2Y/BW	.2990	.3640	.4270	.5340	.6730	.7800	.8870	.9720
X/CW								
.010	-.0817	-.0004	.3784	.1753	.0831	.1437	.1463	
.020	.0000	.0977	.3474	.0538	.0483	.0308	.0015	-.2055
.040		.1347	.2093					
.050	.0185			.0246	-.0187	-.0267	-.0508	
.069								-.2310
.080				.0106				
.081			.0992					
.085		.2122						
.094	.0443							
.150				.0137	-.0037	-.0172	-.0940	
.157								-.1975
.163		.2141						
.177			.0430					
.229	.0915							
.245		.0579						
.250				.0077	-.0284	-.0522	-.1244	
.274			.0290					
.345								-.2559
.390		.0354						
.400				-.0263	-.0424		-.1449	
.402			.0121					
.533								-.2830
.550				-.1354	-.1551			
.565			-.9615					
.600							-.3085	
.637		-.1213						
.650						-.3030		
.670								-.6690
.700					-.2932			
.745				-.2316				
.750						-.7285	-1.0355	
.760			-.1558					
.775				-.5510	-.8217			
.798		-.1887						
.808			-.9063					
.834	-.2157							
.839		-.9248						
.850				-.4163	-.5552	-.4715		
.857			-.4493					
.882								
.885	-.8891							-.2816
.879		-.4628						
.900	-.5982			-.4579				
.905			-.4446				-.3860	
.919		-.3905						

AMES 11-073(OA148) -140A/B/C ORB LEFT WING BOT (XEBL74)

ALPHA (3) = 4.079 BETA (2) = .183

SECTION (1)LEFT WING BOT SURF DEPENDENT VARIABLE CP

2Y/BW	.2990	.3640	.4270	.5340	.6730	.7800	.8870	.9720
X/CW								
.950				-.4924	-.3866	-.3607		
.953			-.4391					
.955		-.3473						
.965	-.2834							
1.000			-.3269		-.2152		-.2279	

ALPHA (3) = 4.001 BETA (3) = 4.242 MACH = .90140 Q = 601.01 P = 1056.6 RN/L = 3.5771

SECTION (1)LEFT WING BOT SURF DEPENDENT VARIABLE CP

2Y/BW	.2990	.3640	.4270	.5340	.6730	.7800	.8870	.9720
X/CW								
.010	-.2022	-.1436	.3038	.2418	.1394	.1981	.1777	
.030	.0000	-.0014	.3277	.1281	.1036	.0826	.0597	-.3402
.040		.0482	.2331					
.050	-.0314			.0790	.0280	.0056	-.0080	
.069								-.3108
.080				.0478				
.081			.1247					
.096		.1757						
.094	.0088							
.150				.0282	.0089	-.0072	-.0912	
.157								-.2472
.163		.2181						
.177			.0612					
.229	.0730							
.246		.0709						
.250				.0135	-.0238	-.0502	-.1362	
.274			.0397					
.345								-.3216
.390		.0454						
.400				-.0263	-.0466		-.1616	
.402			.0146					
.503								-.3127
.550				-.1344	-.1690			
.565			-.9355					
.600							-.3227	
.637		-.1209						
.650						-.3060		
.670								-.6075
.700					-.2520			
.725				-.2151				
.750						-.7585	-.9507	
.760			-.1606					

DATE 10 FEB 76 TABULATED PRESSURE DATA - OA148 (AMES 11-073-1)

AMES 11-073(OA148) -140A/B/C ORB LEFT WING BOT (XEBL74)

ALPHA (3) = 4.001 BETA (3) = 4.242

SECTION (1)LEFT WING BOT SURF DEPENDENT VARIABLE CP

2Y/BW	.2990	.3640	.4270	.5340	.6730	.7800	.8870	.9720
X/CW								
.775				-.5737	-.7152			
.798		-.1983						
.808			-.8730					
.834	-.2353							
.839		-.9073						
.850				-.4367	-.5572	-.4850		
.857			-.4340					-.3079
.862								
.865	-.8624							
.879		-.4575						
.900	-.5980			-.4483			-.3886	
.905			-.4344					
.919		-.3766						
.950				-.4761	-.3938	-.3640		
.953			-.4290					
.955		-.3572						
.965	-.3402							
1.000			-.3248		-.2468		-.2631	

ALPHA (4) = 7.933 BETA (1) = -3.872 MACH = .90130 Q = 600.85 P = 1056.6 RN/L = 3.5771

SECTION (1)LEFT WING BOT SURF DEPENDENT VARIABLE CP

2Y/BW	.2990	.3640	.4270	.5340	.6730	.7800	.8870	.9720
X/CW								
.010	-.1620	-.1700	.4205	.4947	.4476	.5014	.4700	
.020	.0000	.0549	.4712	.3686	.3833	.3823	.3551	-.2741
.040		.1260	.3816					
.050	.0452			.2674	.2668	.2616	.2466	
.069								-.1995
.080				.2160				
.081			.2667					
.096		.2859						
.094	.0846							
.150				.1800	.1850	.1811	.1022	
.157								-.1814
.163		.3283						
.177			.1876					
.229	.1603							
.246		.1861						
.250				.1481	.1266	.1012	.0281	
.274			.1535					
.345								-.1805
.390		.1506						

AMES 11-073(OA148) -140A/B/C ORB LEFT WING BOT (XEBL74)

ALPHA (4) = 7.933 BETA (1) = -3.872

SECTION (1)LEFT WING BOT SURF DEPENDENT VARIABLE CP

2Y/BW	.2990	.3640	.4270	.5340	.6730	.7800	.8870	.9720
X/CW								
.400				.0848	.0759		-.0308	
.402			.1211					
.503								-.2206
.550				-.0345	-.0631			
.565			-.6177					
.600							-.2156	
.637		-.0347						
.650						-.1899		
.670								-.6623
.700					-.2116			
.725				-.1416				
.750						-.8153	-1.0089	
.760			-.1132					
.775				-.5720	-.7533			
.799		-.1332						
.808			-.9588					
.834	-.1786							
.839		-.9088						
.850				-.4515	-.5213	-.5430		
.857			-.4692					
.862								-.3971
.865	-.9098							
.879		-.4745						
.900	-.5992			-.4720			-.3962	
.905			-.4171					
.919		-.3446						
.950				-.4944	-.4158	-.4793		
.953			-.4041					
.955		-.3081						
.965	-.2461							
1.000			-.2980		-.2480		-.3083	

ALPHA (4) = 8.028 BETA (2) = .177 MACH = .90130 Q = 600.85 P = 1056.8 RN/L = 3.5771

SECTION (1)LEFT WING BOT SURF DEPENDENT VARIABLE CP

2Y/BW	.2990	.3640	.4270	.5340	.6730	.7800	.8870	.9720
X/CW								
.010	-.3574	-.3822	.2758	.4949	.4294	.4628	.4155	
.020	.0000	-.0959	.3848	.3871	.3744	.3728	.3285	-.4402
.040		-.0076	.3653					
.050	-.0412			.2911	.2616	.2542	.2262	
.069								-.3272
.080				.2345				

DATE 10 FEB 76 TABULATED PRESSURE DATA - OA148 (AMES 11-073-1) (XE8L74)

AMES 11-073(OA148) -140A/B/C ORB LEFT WING BOT

ALPHA (4) = 8.028 BETA (2) = .177

SECTION (1)LEFT WING BOT SURF DEPENDENT VARIABLE CP

2Y/BW	.2990	.3640	.4270	.5340	.6730	.7800	.8870	.9720
X/CW								
.081			.2703					
.086		.2186						
.094	.0320							
.150				.1823	.1824	.1636	.0791	
.157								-.2197
.163		.3155						
.177			.1944					
.229	.1275							
.246		.1845						
.250				.1403	.1238	.0926	.0036	
.274			.1516					
.345								-.2429
.390		.1491						
.400				.0754	.0590		-.0692	
.402			.1101					
.503								-.2603
.540				-.0401	-.0722			
.555			-.6535					
.600							-.2487	
.637		-.0396						
.650						-.1994		
.670								-.5656
.700					-.2044			
.725				-.1413				
.750						-.8369	-1.0003	
.760			-.1212					
.775				-.6151	-.7454			
.798		-.1420						
.808			-.9671					
.834	-.1826							
.839		-.9070						
.850				-.4484	-.5157	-.5419		
.857			-.4407					
.662								-.3965
.865	-.8873							
.879		-.4823						
.900	-.6131			-.4671			-.4253	
.905			-.4227					
.919		-.3755						
.950				-.4864	-.4113	-.4847		
.953			-.4213					
.955		-.3479						
.965	-.3205							
1.000			-.3280		-.2450		-.3474	

AMES 11-073(OA148) -140A/B/C ORB LEFT WING BOT (XEBL74)

ALPHA (4) = 8.031 BETA (3) = 4.235 MACH = .90130 Q = 600.85 P = 1056.6 RN/L = 3.5771

SECTION (1)LEFT WING BOT SURF DEPENDENT VARIABLE CP

2Y/BW	.2900	.3040	.4270	.5340	.6730	.7800	.6870	.9720
X/CW								
.010	-.5368	-.3352	.1058	.4538	.3978	.4061	.3535	
.020	.0000	-.1643	.2668	.3840	.3544	.3438	.2983	-.6473
.040		-.0915	.3164					
.050	-.1256			.2955	.2598	.2465	.2114	
.069								-.4721
.080				.2344				
.091			.2568					
.085		.1453						
.094	-.0286							
.150				.1779	.1724	.1549	.0584	
.157								-.2701
.163		.2811						
.177			.1916					
.229	.0900							
.246		.1683						
.250				.1349	.1114	.0852	-.0149	
.274			.1515					
.345								-.2907
.390		.1422						
.400				.0677	.0506		-.0918	
.402			.1029					
.503								-.3082
.550				-.0556	-.0812			
.565			-.7046					
.600							-.2668	
.637		-.0448						
.650						-.2100		
.670								-.5320
.700					-.2037			
.725				-.1492				
.750						-.8543	-.9837	
.750			-.1376					
.775				-.6433	-.7675			
.798		-.1611						
.808			-.9866					
.834	-.1874							
.839		-.9078						
.850				-.4710	-.4916	-.5209		
.857			-.4366					
.882								-.3832
.855	-.9579							
.879		-.4930						
.900	-.5955			-.4695			-.4166	
.905			-.4357					
.919		-.3681						

AMES 11-073(OA148) -140A/B/C ORB LEFT WING BOT (XEBL74)

ALPHA (4) = 8.031 BETA (3) = 4.235

SECTION (1)LEFT WING BOT SURF DEPENDENT VARIABLE CP

2Y/BW	.2990	.3640	.4270	.5340	.6730	.7800	.8870	.9720
X/CW								
.950				-.4841	-.4197	-.4616		
.953			-.4162					
.955		-.3439						
.965	-.4376							
1.000			-.3052		-.2832		-.3394	

ALPHA (5) = 11.980 BETA (1) = -3.859 MACH = .90157 Q = 601.36 P = 1056.9 RN/L = 3.5829

SECTION (1)LEFT WING BOT SURF DEPENDENT VARIABLE CP

2Y/BW	.2990	.3640	.4270	.5340	.6730	.7800	.8870	.9720
X/CW								
.010	-.4752	-.5579	.2121	.6326	.6091	.5906	.5340	
.023	.0000	-.1395	.4252	.5749	.5693	.5577	.5060	-.3512
.040		-.0267	.4864					
.060	-.0169			.4775	.4624	.4542	.4173	
.069								-.2039
.080				.4061				
.081			.4101					
.085		.2804						
.094	.0835							
.150				.3335	.3348	.3293	.2428	
.157								-.1609
.163		.4174						
.177			.3259					
.229	.2047							
.246		.3013						
.253				.2701	.2570	.2378	.1563	
.274			.2716					
.345								-.1098
.330		.2560						
.400				.1835	.1766		.0680	
.402			.2144					
.503								-.1935
.550				.0508	.0263			
.565			-.6251					
.600							-.1503	
.637		.0439						
.650						-.1292		
.670								-.5109
.700					-.1895			
.740				-.1361				
.750						-.7832	-.9377	
.760			-.1557					

AMES 11-073(OA148) -140A/B/C ORB LEFT WING BOT (XEBL74)

ALPHA (5) = 11.980 BETA (1) = -3.859

SECTION (1)LEFT WING BOT SURF DEPENDENT VARIABLE CP

2Y/BW	.2990	.3640	.4270	.5340	.6730	.7800	.8870	.9720
X/CW								
.775				-.8185	-.8837			
.798		-.1571						
.808			-.9929					
.834	-.1856							
.839		-.9024						
.850				-.5746	-.7376	-1.0110		
.857			-.7646					
.862								-.5393
.865	-.9217							
.879		-.6968						
.900	-.6213			-.4998			-.8497	
.905			-.4990					
.919		-.4083						
.950				-.4960	-.5209	-.7025		
.953			-.4127					
.955		-.3319						
.965	-.3150							
1.000			-.3136		-.3924		-.4323	

ALPHA (5) = 12.020 BETA (2) = .183 MACH = .90157 Q = 601.36 P = 1056.9 RN/L = 3.5829

SECTION (1)LEFT WING BOT SURF DEPENDENT VARIABLE CP

2Y/BW	.2990	.3640	.4270	.5340	.6730	.7800	.8870	.9720
X/CW								
.010	-.6832	-.4094	.0038	.5479	.5279	.4821	.4241	
.020	.0000	-.2061	.2653	.5304	.5184	.4979	.4362	-.5105
.040		-.1103	.4126					
.050	-.1179			.4519	.4473	.4163	.3710	
.069								-.3496
.080				.3870				
.081			.3809					
.086		.1930						
.094	.0059							
.150				.3157	.3215	.3087	.2078	
.157								-.2123
.163		.3750						
.177			.3133					
.229	.1651							
.246		.2809						
.250				.2569	.2404	.2137	.1225	
.274			.2618					
.345								-.1780
.390		.2545						

AMES 11-073(OA148) -140A/B/C ORB LEFT WING BOT (XEBL74)

ALPHA (5) = 12.020 BETA (2) = .183

SECTION (1)LEFT WING BOT SURF DEPENDENT VARIABLE CP

2Y/BW	.2990	.3640	.4270	.5340	.6730	.7800	.8870	.9720
X/CW								
.400				.1704	.1601		.0310	
.402			.2039					
.503								-.2588
.550				.0403	.0118			
.595			-.5837					
.600							-.1843	
.637		.0469						
.650						-.1474		
.670								-.5597
.700					-.1915			
.725				-.1353				
.750						-.8165	-.9266	
.760			-.1593					
.775				-.8734	-.9035			
.798		-.1571						
.808			-1.0057					
.834	-.1855							
.839		-.8980						
.850				-.6620	-.7410	-1.0066		
.857			-.8520					
.862								-.5991
.865	-.8935							
.879		-.7594						
.900	-.6032			-.5349			-.8908	
.905			-.5163					
.919		-.5604						
.950				-.5076	-.5054	-.7097		
.953			-.3666					
.955		-.3556						
.965	-.4074							
1.000			-.2853		-.4111		-.4745	

ALPHA (5) = 12.054 BETA (3) = 4.256 MACH = .90157 Q = 601.36 P = 1056.9 RN/'. = 3.5829

SECTION (1)LEFT WING BOT SURF DEPENDENT VARIABLE CP

2Y/BW	.2990	.3640	.4270	.5340	.6730	.7800	.8870	.9720
X/CW								
.010	-.7323	-.3811	-.2119	.4470	.4323	.3603	.2995	
.020	.0000	-.3027	.0988	.4638	.4526	.4248	.3546	-.6645
.040		-.2149	.3219					
.050	-.2103			.4129	.4116	.3754	.3210	
.069								-.4836
.090				.3559				

AMES 11-073(OA148) -140A/B/C ORB LEFT WING BOT (XEBL74)

ALPHA (5) = 12.054 BETA (3) = 4.256

SECTION (1)LEFT WING BOT SURF DEPENDENT VARIABLE CP

2Y/BW	.2990	.3640	.4270	.5340	.6730	.7800	.8870	.9720
X/CW								
.081			.3354					
.086		.1082						
.094	-.0632							
.150				.2871	.2971	.2800	.1764	
.157								-.2721
.163		.3172						
.177			.2933					
.229	.1122							
.246		.2462						
.250				.2332	.2184	.1927	.0964	
.274			.2438					
.345								-.2551
.399		.2334						
.400				.1526	.1379		-.0028	
.402			.1857					
.503								-.3158
.550				.0302	-.0035			
.565			-.5908					
.600							-.2141	
.637		.0334						
.650						-.1609		
.670								-.5926
.700					-.1793			
.725				-.1406				
.750						-.8482	-.9304	
.760			-.1596					
.775				-.8951	-.9302			
.798		-.1643						
.808			-1.0105					
.834	-.1911							
.839		-.8952						
.850				-.7034	-.7343	-1.0095		
.857			-.8916					
.862								-.6467
.865	-.8661							
.879		-.7504						
.900	-.5870			-.5483			-.7754	
.905			-.5716					
.919		-.5959						
.950				-.5305	-.5117	-.6768		
.953			-.3836					
.955		-.4195						
.965	-.4718							
1.000			-.2649		-.3919		-.5040	

AMES 11-073(OA148) -140A/B/C ORB LEFT WING BOT (XE8L75) (05 AUG 75)

REFERENCE DATA

SREF = 2690.0000 SQ.FT. XMRP = 1076.6800 IN. XO
LREF = 474.8000 IN. YMRP = .0000 IN. YO
BREF = 936.0680 IN. ZMRP = 375.0000 IN. ZO
SCALE = .0300

PARAMETRIC DATA

RUDDER = -5.000 SPDBRK = 55.000
BDFLAP = 16.300 L-ELVN = -10.000
R-ELVN = -10.000 MACH = .600

ALPHA (1) = -3.999 BETA (1) = -7.854 MACH = .59648 Q = 594.32 P = 2386.4 RN/L = 4.8576

SECTION (1)LEFT WING BOT SURF DEPENDENT VARIABLE CP

2Y/BW	.2990	.3640	.4270	.5340	.6730	.7800	.8870	.9720
X/CW								
.010	-.3199	-.7333	-1.2334	-2.0858	-1.7158	-1.5850	-1.4329	
.020	.0000	-.6299	-1.2701	-1.8555	-1.5702	-1.3217	-1.2995	-1.1867
.040		-.5549	-1.0781					
.050	-.2639			-1.0337	-1.2478	-1.2098	-1.1457	
.069								-1.1344
.080				-.8084				
.081			-.6772					
.086		-.3782						
.094	-.2441							
.150				-.5296	-.6191	-.7382	-.7711	
.157								-.4122
.163		-.4213						
.177			-.4283					
.223	-.2005							
.245		-.4180						
.250				-.3673	-.4377	-.4999	-.5269	
.274			-.3245					
.345								-.5297
.350		-.2905						
.400				-.2878	-.3215		-.3989	
.402			-.2420					
.503								-.6030
.550				-.3157	-.3469			
.565			-.2219					
.600							-.4934	
.637		-.2936						
.650						-.4516		
.670								-.8084
.700					-.4752			
.725				-.3711				
.750						-.7010	-.6972	
.760			-.3655					
.775				-.6329	-.5625			
.798		-.4249						
.808			-.7618					
.834	-.3360							
.839		-.5106						
.850				-.4758	-.4656	-.3614		

AMES 11-073(OA148) -140A/B/C ORB LEFT WING BOT (XE8L75)

ALPHA (1) = -3.999 BETA (1) = -7.854

SECTION (1)LEFT WING BOT SURF DEPENDENT VARIABLE CP

2Y/BW	.2990	.3640	.4270	.5340	.6730	.7800	.8870	.9720
X/CW								
.857			-.3830					
.862								-.7379
.865	-.5370							
.879		-.3334						
.900	-.3267			-.3614			-.3042	
.905			-.2814					
.919		-.2286						
.950				-.2510	-.3868	-.1482		
.953			-.1963					
.955		-.1437						
.965	-.1300							
1.000			-.0812		-.0993		-.1059	

ALPHA (1) = -3.939 BETA (2) = -3.848 MACH = .59648 Q = 594.32 P = 2386.4 RN/L = 4.8576

SECTION (1)LEFT WING BOT SURF DEPENDENT VARIABLE CP

2Y/BW	.2990	.3640	.4270	.5340	.6730	.7800	.8870	.9720
X/CW								
.010	-.2042	-.4764	-.9031	-2.1648	-1.9714	-1.6464	-1.4753	
.020	.0000	-.4101	-.9662	-1.9530	-1.7996	-1.3514	-1.3427	-.9883
.040		-.3907	-.8293					
.050	-.1801			-.9330	-1.1559	-1.1840	-1.1445	
.069								-.9416
.080				-.7074				
.081			-.5791					
.096		-.2620						
.094	-.1608							
.150				-.4594	-.5313	-.6553	-.6817	
.157								-.3783
.163		-.3133						
.177			-.3896					
.233	-.1371							
.246		-.3581						
.250				-.3371	-.3935	-.4604	-.4853	
.274			-.2976					
.345								-.5071
.330		-.2609						
.400				-.2680	-.3040		-.3799	
.402			-.2332					
.503								-.5525
.550				-.3061	-.3402			
.565			-.2009					
.600							-.4827	

DATE 10 FEB 76 TABULATED PRESSURE DATA - OA148 (AMES 11-073-1)

AMES 11-073(OA148) -140A/B/C ORB LEFT WING BOT (XE8L75)

ALPHA (1) = -3.939 BETA (2) = -3.848

SECTION (1)LEFT WING BOT SURF DEPENDENT VARIABLE CP

2Y/BW	.2990	.3640	.4270	.5340	.6730	.7800	.8870	.9720
X/CW								
.637		-.2854						
.650						-.4500		
.670								-.7652
.700					-.4793			
.725				-.3612				
.750						-.6981	-.6817	
.760			-.3593					
.775				-.5708	-.5684			
.798		-.4172						
.808			-.7719					
.834	-.3509							
.839		-.5290						
.850				-.4841	-.4548	-.3775		
.857			-.3911					
.862								-.7849
.865	-.5765							
.879		-.3562						
.900	-.3758			-.4186			-.3068	
.905			-.3171					
.919		-.2562						
.950				-.3235	-.3170	-.1514		
.953			-.2078					
.955		-.1679						
.965	-.1660							
1.000			-.1032		-.0932		-.1025	

ALPHA (1) = -3.938 BETA (3) = .187 MACH = .59648 Q = 594.32 P = 2386.4 RN/L = 4.8576

SECTION (1)LEFT WING BOT SURF DEPENDENT VARIABLE CP

2Y/BW	.2990	.3640	.4270	.5340	.6730	.7800	.8870	.9720
X/CW								
.010	-.1064	-.2732	-.6477	-1.9413	-2.0654	-1.7713	-1.5390	
.020	.0000	-.2298	-.6974	-1.5050	-1.8070	-1.4300	-1.3523	-.8957
.040		-.2070	-.6337					
.050	-.1124			-.8353	-.9420	-1.1451	-1.1259	
.069								-.6973
.080				-.6356				
.081			-.4779					
.085		-.1521						
.094	-.1049							
.150				-.4198	-.4858	-.5823	-.6373	
.157								-.3629
.163		-.2213						

AMES 11-073(OA148) -140A/B/C ORB LEFT WING BOT (XE8L75)

ALPHA (1) = -3.938 BETA (3) = .187

SECTION (1)LEFT WING BOT SURF DEPENDENT VARIABLE CP

2Y/BW	.2990	.3640	.4270	.5340	.6730	.7800	.8870	.9720
X/CW								
.177			-.3383					
.229	-.0886							
.246		-.2996						
.250				-.3105	-.3755	-.4275	-.4454	
.274			-.2691					
.345								-.5046
.390		-.2378						
.400				-.2584	-.2935		-.3551	
.402			-.2216					
.503								-.5714
.550				-.2978	-.3358			
.565			-.1676					
.600							-.4648	
.637		-.2729						
.650						-.4398		
.670								-.7531
.700					-.4696			
.725				-.3476				
.750						-.7158	-.6732	
.760			-.3515					
.775				-.5311	-.5690			
.798		-.4211						
.808			-.7400					
.834	-.3482							
.839		-.5355						
.850				-.4803	-.4329	-.3695		
.857			-.3920					
.862								-.7824
.865	-.6022							
.879		-.3714						
.900	-.3961			-.4355			-.2825	
.905			-.3215					
.919		-.2767						
.950				-.3426	-.2676	-.1539		
.953			-.2225					
.955		-.1905						
.965	-.2266							
1.000			-.1200		-.1040		-.0975	

AMES 11-073(OA148) -140A/B/C ORB LEFT WING BOT (XEBL75)

ALPHA (1) = -3.926 BETA (4) = 4.266 MACH = .59648 Q = 594.32 P = 2386.4 RN/L = 4.8576

SECTION (1)LEFT WING BOT SURF DEPENDENT VARIABLE CP

2Y/BW	.2990	.3640	.4270	.5340	.6730	.7800	.8870	.9720
X/CW								
.010	-.0505	-.1164	-.4183	-1.5990	-1.8174	-2.1944	-2.0024	
.020	.0000	-.1055	-.4727	-1.2265	-1.3602	-1.5842	-1.8397	-.8150
.040		-.0905	-.4701					
.050	-.0645			-.7134	-.8154	-.9487	-1.0744	
.069								-.6022
.080				-.5549				
.081			-.3901					
.086		-.0737						
.094	-.0543							
.150				-.3677	-.4222	-.4718	-.4878	
.157								-.3232
.163		-.1444						
.177			-.2925					
.229	-.0525							
.246		-.2474						
.250				-.2809	-.3378	-.3692	-.3752	
.274			-.2451					
.345								-.4130
.393		-.2071						
.400				-.2425	-.2678		-.3128	
.402			-.2061					
.503								-.4910
.550				-.2819	-.3134			
.565			-.1963					
.600							-.4203	
.637		-.2627						
.650						-.4173		
.670								-.6660
.700					-.4529			
.725				-.3352				
.750						-.6779	-.6320	
.760			-.3553					
.775				-.4843	-.5478			
.798		-.4082						
.808			-.7392					
.834	-.3564							
.839		-.5285						
.850				-.4656	-.4050	-.3777		
.857			-.3749					
.862								-.6850
.865	-.6131							
.879		-.3716						
.900	-.4111			-.4428			-.2562	
.905			-.3157					
.919		-.2782						

AMES 11-073(OA148) -140A/B/C ORB LEFT WING BOT (XE8L75)

ALPHA (1) = -3.926 BETA (4) = 4.266

SECTION (1)LEFT WING BOT SURF DEPENDENT VARIABLE CP

2Y/BW	.2990	.3640	.4270	.5340	.6730	.7800	.8870	.9720
X/CW								
.850				-.3388	-.2490	-.1673		
.953			-.2196					
.955		-.1931						
.965	-.2882							
1.000			-.1298		-.1160		-.1373	

ALPHA (1) = -3.941 BETA (5) = 8.332 MACH = .59648 Q = 594.32 P = 2386.4 RN/L = 4.8576

SECTION (1)LEFT WING BOT SURF DEPENDENT VARIABLE CP

2Y/BW	.2990	.3640	.4270	.5340	.6730	.7800	.8870	.9720
X/CW								
.010	-.0274	-.0022	-.1762	-1.1950	-1.4[illegible]9	-1.9917	-1.9169	
.020	.0000	-.0050	-.2373	-.9485	-1.1060	-1.3013	-1.7209	-.7017
.040		.0070	-.3029					
.050	-.0343			-.5547	-.6879	-.8153	-.8824	
.069								-.5114
.080				-.4497				
.081			-.2847					
.086		-.0027						
.094	-.0366							
.150				-.3149	-.3696	-.4090	-.4422	
.157								-.2825
.163		-.0755						
.177			-.2425					
.229	-.0283							
.246		-.1889						
.250				-.2483	-.3004	-.3322	-.3361	
.274			-.2134					
.345								-.3329
.390		-.1854						
.400				-.2275	-.2418		-.2825	
.402			-.1890					
.503								-.3863
.560				-.2689	-.2955			
.565			-.2229					
.600							-.3938	
.637		-.2488						
.650						-.3944		
.670								-.5071
.700					-.4287			
.745				-.3149				
.750						-.6676	-.5947	
.760			-.3420					

DATE 10 FEB 76 TABULATED PRESSURE DATA - OA148 (AMES 11-073-1)

AMES 11-073(OA148) -140A/B/C ORB LEFT WING BOT (XEBL75)

ALPHA (1) = -3.941 BETA (5) = 8.332

SECTION (1)LEFT WING BOT SURF DEPENDENT VARIABLE CF

2Y/BW	.2990	.3640	.4270	.5340	.6730	.7800	.8870	.9720
X/CW								
.775				-.4036	-.5207			
.798		-.3988						
.808			-.6830					
.834	-.3557							
.839		-.5231						
.850				-.4349	-.3631	-.3737		
.857			-.3731					
.862								-.5402
.865	-.6243							
.879		-.3815						
.900	-.4248			-.4190			-.2261	
.905			-.3191					
.919		-.2903						
.950				-.3312	-.2418	-.1494		
.953			-.2252					
.955		-.19						
.965	-.3251							
1.000			-.1267		-.1302		-.1193	

ALPHA (2) = .043 BETA (1) = -7.890 MACH = .59624 Q = 593.85 P = 2386.3 RN/L = 4.6579

SECTION (1)LEFT WING BOT SURF DEPENDENT VARIABLE CP

2Y/BW	.2990	.3640	.4270	.5340	.6730	.7800	.8870	.9720
X/CW								
.010	-.0201	-.0735	-.2277	-1.0974	-1.1453	-1.2188	-1.1024	
.020	.0000	-.1067	-.3573	-.9639	-.9254	-1.0297	-1.0921	-.4033
.040		-.0973	-.4366					
.050	-.0637			-.5844	-.6018	-.6557	-.6603	
.060								-.3478
.080				-.4511				
.081			-.3407					
.086		-.0666						
.094	-.0739							
.150				-.2895	-.3030	-.3157	-.3308	
.157								-.2417
.163		-.1497						
.177			-.2424					
.229	-.0680							
.246		-.2234						
.250				-.2108	-.2552	-.2680	-.2772	
.274			-.1833					
.345								-.2911
.390		-.1665						

AMES 11-073(OA148) -148A/B/C ORB LEFT WING BOT (XEBL75)

ALPHA (2) = .043 BETA (1) = -7.890

SECTION (1)LEFT WING BOT SURF DEPENDENT VARIABLE CP

2Y/BW	.2990	.3640	.4270	.5340	.6730	.7800	.8870	.9720
X/CW								
.400				-.1866	-.2084		-.2471	
.402			-.1449					
.503								-.3790
.550				-.2517	-.2788			
.565			-.2690					
.600							-.3834	
.637		-.2418						
.650						-.3743		
.670								-.4878
.700					-.4305			
.725				-.3467				
.750						-.6065	-.6476	
.760			-.3309					
.775				-.6569	-.5618			
.799		-.3983						
.808			-.7475					
.834	-.3246							
.839		-.5107						
.850				-.4961	-.4354	-.4209		
.857			-.3960					
.862								-.3607
.855	-.5419							
.879		-.3267						
.900	-.3218			-.3750			-.2460	
.905			-.2628					
.919		-.2056						
.950				-.2206	-.4098	-.1400		
.953			-.1638					
.955		-.1217						
.965	-.1117							
1.000			-.0673		-.1136		-.0891	

ALPHA (2) = .091 BETA (2) = -3.863 MACH = .59624 Q = 593.85 P = 2386.3 RN/L = 4.8579

SECTION (1)LEFT WING BOT SURF DEPENDENT VARIABLE CP

2Y/BW	.2990	.3640	.4270	.5340	.6730	.7800	.8870	.9720
X/CW								
.010	.0075	.0137	-.0845	-.8563	-.9554	-1.0274	-.9245	
.020	.0003	-.0141	-.1949	-.7797	-.7687	-.8472	-.9713	-.3562
.040		-.0081	-.2955					
.050	-.0279			-.4814	-.5338	-.5724	-.5896	
.063								-.2995
.080				-.3849				

AMES 11-073(OA148) -140A/B/C ORB LEFT WING BOT (XEBL75)

ALPHA (2) = .091 BETA (2) = -3.863

SECTION (1)LEFT WING BOT SURF DEPENDENT VARIABLE CP

2Y/BW	.2930	.3640	.4270	.5340	.6730	.7800	.8870	.9720
X/CW								
.081			-.2667					
.086		-.0007						
.094	-.0406							
.150				-.2525	-.2701	-.2842	-.3099	
.157								-.2260
.163		-.0915						
.177			-.2094					
.229	-.0345							
.246		-.1815						
.250				-.1939	-.2299	-.2528	-.2598	
.274			-.1674					
.345								-.2634
.370		-.1447						
.410				-.1759	-.1980		-.2366	
.402			-.1445					
.503								-.3503
.550				-.2432	-.2717			
.565			-.2217					
.600							-.3756	
.637		-.2289						
.650						-.3718		
.670								-.4411
.700					-.4349			
.725				-.3363				
.750						-.5912	-.6407	
.760			-.3377					
.775				-.5898	-.5637			
.798		-.3939						
.808			-.7609					
.834	-.3298							
.839		-.5246						
.850				-.5038	-.4386	-.4220		
.857			-.3962					
.862								-.3046
.865	-.5776							
.873		-.3480						
.900	-.3722			-.4117			-.2446	
.905			-.2920					
.919		-.2384						
.950				-.2769	-.3649	-.1548		
.953			-.1812					
.955		-.1479						
.985	-.1541							
1.000			-.0758		-.0959		-.1005	

AMES 11-073(OA148) -140A/B/C ORB LEFT WING BOT (XEBL75)

ALPHA (2) = .032 BETA (3) = .181 MACH = .59624 Q = 593.85 P = 2386.3 RN/L = 4.8579

SECTION (1)LEFT WING BOT SURF DEPENDENT VARIABLE CP

2Y/BW	.2990	.3640	.4270	.5340	.6730	.7800	.8870	.9720
X/CW								
.010	.0054	.0545	.0391	-.6313	-.7964	-.8872	-.8356	
.020	.0000	.0395	-.0488	-.6190	-.6355	-.7189	-.8517	-.3114
.040		.0507	-.1857					
.050	-.0145			-.3925	-.4470	-.5128	-.5457	
.069								-.2738
.080				-.3242				
.081			-.2019					
.086		.0464						
.094	-.0240							
.150				-.2211	-.2444	-.2666	-.2968	
.152								-.2197
.163		-.0325						
.177			-.1673					
.229	-.0169							
.246		.1483						
.250				-.1703	-.2115	-.2374	-.2528	
.274			-.1488					
.345								-.2412
.390		-.1294						
.400				-.1665	-.1911		-.2336	
.402			-.1322					
.503								-.3280
.550				-.2400	-.2641			
.565			-.2237					
.600							-.3637	
.637		-.2247						
.650						-.3680		
.670								-.4032
.700					-.4276			
.725				-.3277				
.750						-.6086	-.6109	
.760			-.3348					
.775				-.5914	-.5577			
.788		-.3936						
.808			-.7693					
.834	-.3366							
.839		-.5465						
.850				-.5008	-.4274	-.4074		
.857			-.3924					
.862								-.2668
.865	-.5962							
.879		-.3566						
.900	-.4003			-.4055			-.2301	
.905			-.3099					
.919		-.2617						

AMES 11-073(OA148) -140A/B/C ORB LEFT WING BOT. (XEBL75)

ALPHA (2) = .092 BETA (3) = .181

SECTION (1)LEFT WING BOT SURF DEPENDENT VARIABLE CP

2Y/BW	.2990	.3640	.4270	.5340	.6730	.7800	.8870	.9720
X/CW								
.950				-.2789	-.2848	-.1447		
.953			-.1891					
.955		-.1740						
.965	-.2142							
1.000			-.1009		-.0816		-.0878	

ALPHA (2) = .077 BETA (4) = 4.247 MACH = .59624 Q = 593.85 P = 2386.3 RN/L = 4.8579

SECTION (1)LEFT WING BOT SURF DEPENDENT VARIABLE CP

2Y/BW	.2990	.3640	.4270	.5340	.6730	.7800	.8870	.9720
X/CW								
.010	-.0291	.0433	.1197	-.4512	-.6038	-.6513	-.6219	
.020	.0000	.0492	.0469	-.4572	-.4799	-.5625	-.6612	-.2474
.040		.0095	-.0903					
.060	-.0198			-.3025	-.3523	-.4222	-.4493	
.069								-.2275
.080				-.2620				
.081			-.1396					
.086		.0719						
.094	-.0178							
.150				-.1875	-.2099	-.2240	-.2682	
.157								-.2088
.163		.0101						
.177			-.1356					
.229	-.0005							
.246		-.1190						
.250				-.1525	-.1955	-.2148	-.2320	
.274			-.1309					
.345								-.2213
.390		-.1096						
.400				-.1601	-.1800		-.2197	
.402			-.1321					
.503								-.2990
.550				-.2333	-.2545			
.565			-.2418					
.600							-.3536	
.637		-.2184						
.650						-.3690		
.670								-.3644
.700					-.4229			
.725				-.3177				
.750						-.6316	-.5846	
.760			-.3309					

AMES 11-073(OA148) -140A/B/C ORB LEFT WING BOT (XEBL75)

ALPHA (2) = .077 BETA (4) = 4.247

SECTION (1)LEFT WING BOT SURF DEPENDENT VARIABLE CP

2Y/BW	.2990	.3640	.4270	.5340	.6730	.7800	.8870	.9720
X/CW								
.775				-.5191	-.5371			
.798		-.3991						
.808			-.7432					
.834	-.3368							
.839		-.5268						
.850				-.4812	-.4018	-.3739		
.857			-.3826					
.862							-.2195	
.865	-.5989							
.879		-.3769						
.900	-.4102			-.4171		-.2140		
.905			-.3224					
.919		-.2795						
.950				-.2947	-.2317	-.1365		
.953			-.2105					
.955		-.1833						
.965	-.2825							
1.000			-.1093		-.0929		-.0574	

ALPHA (2) = .073 BETA (5) = 8.305 MACH = .59624 Q = 593.85 P = 2386.3 RN/L = 4.8579

SECTION (1)LEFT WING BOT SURF DEPENDENT VARIABLE CP

2Y/BW	.2990	.3640	.4270	.5340	.6730	.7800	.8870	.9720
X/CW								
.010	-.1115	-.0222	.1797	-.2459	-.4230	-.4646	-.4875	
.020	.0000	.0157	.1366	-.2880	-.3491	-.4503	-.5289	-.2120
.040		.0460	.0067					
.040	-.0467			-.2079	-.2658	-.3348	-.3723	
.059								-.2217
.080				-.1871				
.081			-.0765					
.086		.0756						
.094	-.0333							
.150				-.1475	-.1753	-.1997	-.2442	
.157								-.1988
.163		.0457						
.177			-.1021					
.229	-.0032							
.246		-.0859						
.250				-.1372	-.1711	-.1924	-.2184	
.274			-.1087					
.345								-.2048
.390		-.0970						

AMES 11-073(OA148) -140A/B/C ORB LEFT WING BOT (XEBL75)

ALPHA (2) = .073 BETA (5) = 8.305

SECTION : 1 LEFT WING BOT SURF DEPENDENT VARIABLE CP

2Y/BW	.2990	.3640	.4270	.5340	.6730	.7800	.8870	.9720
X/CW								
.400				-.1529	-.1692		-.2111	
.402			-.1187					
.503								-.2726
.550				-.2210	-.2378			
.565			-.2547					
.600							-.3356	
.637		-.2111						
.650						-.3623		
.675								-.3234
.700					-.4064			
.725				-.2978				
.750						-.6523	-.5489	
.760			-.3280					
.775				-.4400	-.5112			
.784		-.3834						
.808			-.7150					
.834	-.3421							
.839		-.5284						
.850				-.4438	-.3511	-.3579		
.857			-.3784					
.872								-.1797
.866	-.6256							
.879		-.3793						
.900	-.4272			-.4078			-.1903	
.905			-.3137					
.919		-.2251						
.950				-.2934	-.2141	-.1184		
.953			-.1997					
.955		-.1826						
.965	-.3303							
[illegible]			-.1045		-.0[illegible]41		-.0408	

ALPHA (3 = 4.023 BETA (11 = -7.904 MACH = .59640 Q = 594.21 P = 2386.5 RN/L = 4.8659

SECTION : 11 LEFT WING BOT SURF DEPENDENT VARIABLE CP

2Y/BW	.2990	.3640	.4270	.5340	.6730	.7800	.8870	.9720
X/CW								
.010	.0772	.1434	.2863	-.0979	-.1129	-.0049	.0294	
.020	.0000	.1337	.1883	-.1995	-.1197	-.1099	-.1183	-.0119
.040		.1457	-.0012					
.050	.0545			-.1614	-.1491	-.1287	-.1164	
.069								-.0528
.080				-.1362				

DATE 10 FEB 76 TABULATED PRESSURE DATA - (11-073-1)

AMES 11-073(OA14 ORB LEFT WING BOT (XEBL75)

ALPHA (3) = 4.023 BETA (1) = -7.904

SECTION (1)LEFT WING BOT SURF DEPENDENT VARIABLE CP

2Y/BW	.2990	.3640	.4270	.5340	.6730	.7800	.8870	.9720
X/CW								
.081			-.0606					
.086		.1399						
.094	.0351							
.150				-.0793	-.0800	-.0795	-.0986	
.157								-.1487
.163		.0574						
.177			-.0585					
.229	.0382							
.246		-.0562						
.250				-.0585	-.0861	-.1026	-.1100	
.274			-.0538					
.345								-.1479
.390		-.0472						
.400				-.0884	-.1016		-.1499	
.402			-.0542					
.503								-.2703
.550				-.1814	-.2078			
.565			-.2814					
.600							-.3353	
.637		-.1759						
.650						-.3402		
.670								-.3791
.700					-.4061			
.725				-.3146				
.750						-.7265	-.6708	
.760			-.3093					
.775				-.7173	-.5639			
.798		-.3746						
.808			-.7586					
.834	-.3003							
.839		-.5054						
.850				-.4926	-.4343	-.3430		
.857			-.3915					
.862								-.2000
.865	-.5318							
.879		-.3155						
.900	-.3257			-.3345			-.1964	
.905			-.2383					
.919		-.1919						
.950				-.1693	-.3409	-.0920		
.953			-.1284					
.955		-.1066						
.965	-.0972							
1.000			-.0339		-.0483		.0001	

C-6

AMES 11-073(OA148) -140A/B/C ORB LEFT WING BOT (XE8L75)

ALPHA (3) = 4.026 BETA (2) = -3.864 MACH = .59640 Q = 594.21 P = 2386.5 RN/L = 4.8659

SECTION (1)LEFT WING BOT SURF DEPENDENT VARIABLE CP

2Y/BW	.2990	.3640	.4270	.5340	.6730	.7800	.8870	.9720
X/CW								
.010	.0183	.0776	.3090	.0233	-.0286	.0711	.0934	
.020	.0000	.1099	.2403	-.0905	-.0491	-.0639	-.0486	-.0555
.040		.1335	.0714					
.050	.0414			-.0950	-.0923	-.0929	-.0885	
.069								-.0803
.080				-.0770				
.081			-.0187					
.086		.1581						
.094	.0342							
.150				-.0541	-.0541	-.0574	-.0945	
.157								-.1481
.163		.1007						
.177			-.0377					
.229	.0472							
.246		-.0337						
.250				-.0501	-.0771	-.0943	-.1158	
.274			-.0384					
.345								-.1650
.300		-.0318						
.400				-.0847	-.0980		-.1465	
.402			-.0512					
.503								-.2705
.550				-.1783	-.2042			
.565			-.2578					
.600							-.3310	
.637		-.1701						
.650						-.3466		
.670								-.3581
.700					-.4091			
.725				-.3155				
.750						-.7333	-.6601	
.760			-.3116					
.775				-.6256	-.5647			
.798		-.3774						
.808			-.7628					
.834	-.3097							
.839		-.5295						
.850				-.5066	-.4410	-.3586		
.857			-.3782					
.862								-.1796
.865	-.5617							
.879		-.3437						
.900	-.3689			-.3896			-.2105	
.905			-.2623					
.919		-.2334						

DATE 10 FEB 76 TABULATED PRESSURE DATA - OA148 (AMES 11-073-1)

AMES 11-073(OA148) -140A/B/C ORB LEFT WING BOT (XE8L75)

ALPHA (3) = 4.026 BETA (2) = -3.884

SECTION (1)LEFT WING BOT SURF DEPENDENT VARIABLE CP

2Y/BW	.2990	.3640	.4270	.5340	.6730	.7800	.8870	.9720
X/CW								
.950				-.2271	-.2875	-.1056		
.953			-.1578					
.955		-.1339						
.965	-.1413							
1.000			-.0606		-.0332		-.0260	

ALPHA (3) = 4.153 BETA (3) = .177 MACH = .59640 Q = 594.21 P = 2386.5 RN/L = 4.8659

SECTION (1)LEFT WING BOT SURF DEPENDENT VARIABLE CP

2Y/BW	.2990	.3640	.4270	.5340	.6730	.7800	.8870	.9720
X/CW								
.010	-.0827	-.0441	.2924	.0995	.0356	.1268	.1096	
.020	.0000	.0425	.2654	-.0042	.0055	.0015	-.0196	-.1201
.040		.0834	.1310					
.050	-.0004			-.0297	-.0376	-.0584	-.0800	
.069								-.1357
.080				-.0479				
.081			.0294					
.086		.1468						
.094	.0142							
.150				-.0381	-.0406	-.0499	-.0975	
.157								-.1653
.163		.1195						
.177			-.0148					
.229	.0454							
.246		-.0107						
.250				-.0419	-.0720	-.0913	-.1190	
.274			-.0316					
.345								-.1866
.390		-.0269						
.400				-.0838	-.1025		-.1556	
.402			-.0501					
.503								-.2784
.550				-.1766	-.2045			
.565			-.2567					
.600							-.3318	
.637		-.1654						
.650						-.3425		
.670								-.3472
.700					-.4032			
.725				-.3139				
.750						-.7175	-.6202	
.760			-.3145					

AMES 11-073(OA148) -140A/B/C OMB LEFT WING BOT (XEBL75)

ALPHA (3) = 4.153 BETA (3) = .177

SECTION (1)LEFT WING BOT SURF DEPENDENT VARIABLE CP

2Y/BW	.2990	.3640	.4270	.5340	.6730	.7800	.8870	.9720
X/CW								
.775				-.6701	-.5526			
.798		-.3763						
.808			-.7746					
.834	-.3182							
.839		-.5389						
.850				-.5013	-.4264	-.3778		
.857			-.3807					
.862								-.1562
.865	-.5826							
.879		-.3617						
.900	-.3925			-.3755			-.2090	
.905			-.2787					
.919		-.2612						
.950				-.2457	-.2338	-.1133		
.953			-.1756					
.955		-.1584						
.965	-.2196							
1.000			.0738		-.0427		-.0165	

ALPHA (3) = 4.012 BETA (4) = 4.240 MACH = .59640 Q = 594.21 P = 2386.5 RN/L = 4.8659

SECTION (1)LEFT WING BOT SURF DEPENDENT VARIABLE CP

2Y/BW	.2990	.3640	.4270	.5340	.6730	.7800	.8870	.9720
X/CW								
.010	-.2012	-.1904	.2283	.1549	.0997	.1662	.1512	
.020	.0000	-.0594	.2489	.0536	.0480	.0482	.0282	-.1972
.040		-.0071	.1478					
.050	-.0559			.0096	-.0211	-.0301	-.0460	
.069								-.1990
.080				-.0145				
.081			.0498					
.086		.1123						
.094	-.0236							
.150				-.0239	-.0284	-.0449	-.0887	
.157								-.1920
.163		.1281						
.177			-.0033					
.229	.0221							
.246		-.0015						
.250				-.0438	-.0627	-.0862	-.1242	
.274			-.0222					
.345								-.2080
.330		-.0213						

AMES 11-073(OA148) -140A/B/C ORB LEFT WING BOT (XEBL75)

ALPHA (3) = 4.012 BETA (4) = 4.240

SECTION (1)LEFT WING BOT SURF DEPENDENT VARIABLE CP

2Y/BW	.2990	.3640	.4270	.5340	.6730	.7800	.8870	.9720
X/CW								
.400				-.0832	-.1009		-.1584	
.402			-.0504					
.503								-.2827
.550				-.1748	-.2003			
.565			-.2739					
.600							-.3309	
.637		-.1624						
.650						-.3415		
.670								-.3229
.700					-.3989			
.725				-.2981				
.750						-.7083	-.6158	
.760			-.3149					
.775				-.5760	-.5240			
.798		-.3795						
.808			-.7489					
.834	-.3231							
.839		-.5243						
.850				-.4859	-.3961	-.3790		
.857			-.3696					
.862								-.1334
.865	-.5948							
.879		-.3727						
.900	-.4007			-.3895			-.1865	
.905			-.3014					
.919		-.2732						
.950				-.2455	-.2000	-.1126		
.953			-.1723					
.965		-.1710						
.965	-.2946							
1.000			-.0835		-.0657		-.0068	

ALPHA (3) = 4.017 BETA (5) = 8.208 MACH = .59640 Q = 594.21 P = 2386.5 RN/L = 4.8659

SECTION (1)LEFT WING BOT SURF DEPENDENT VARIABLE CP

2Y/BW	.2990	.3640	.4270	.5340	.6730	.7800	.8870	.9720
X/CW								
.010	-.3783	-.3386	.1189	.2126	.1473	.1772	.1611	
.020	.0000	-.1752	.1878	.1187	.0903	.0772	.0465	-.3022
.040		-.1145	.1566					
.050	-.1316			.0536	.0325	-.0037	-.0323	
.069								-.2751
.080				.0172				

AMES 11-073(OA148) -140A/B/C ORB LEFT WING BOT (XEBL75)

ALPHA (3) = 4.017 BETA (5) = 8.288

SECTION (1)LEFT WING BOT SURF DEPENDENT VARIABLE CP

2Y/BW	.2990	.3640	.4270	.5340	.6730	.7800	.8870	.9720
X/CW								
.081			.0735					
.085		.0592						
.094	-.0719							
.150				-.0115	-.0179	-.0294	-.0971	
.157								-.2222
.163		.1226						
.177			.0181					
.229	-.0033							
.246		.0020						
.250				-.0366	-.0580	-.0840	-.1259	
.274			-.0155					
.345								-.2295
.390		-.0185						
.400				-.0839	-.0981		-.1627	
.402			-.0524					
.403								-.2970
.550				-.1739	-.2012			
.565			-.3022					
.600							-.3260	
.637		-.1618						
.650						-.3303		
.670								-.3066
.700					-.3771			
.725				-.3067				
.750						-.6764	-.5859	
.760			-.3249					
.775				-.6676	-.5070			
.798		-.3735						
.808			-.7434					
.834	-.3321							
.839		-.5339						
.850				-.4643	-.3693	-.3588		
.857			-.3860					
.862								-.1137
.865	-.6240							
.879		-.3798						
.900	-.4206			-.3374			-.1675	
.905			-.2820					
.919		-.2849						
.950				-.2002	-.1769	-.1113		
.953			-.1720					
.955		-.1778						
.965	-.3496							
1.000			-.0787		-.0505		-.0091	

DATE 10 FEB 76 TABULATED PRESSURE DATA - OA148 (AMES 11-073-1) (XEBL75)

AMES 11-073(OA148) -140A/B/C ORB LEFT WING BOT

ALPHA (4) = 7.959 BETA (1) = -7.893 MACH = .59636 Q = 593.97 P = 2386.7 RN/L = 4.8657

SECTION (1) LEFT WING BOT SURF DEPENDENT VARIABLE CP

2Y/BW	.2990	.3640	.4270	.5340	.6730	.7800	.8870	.9720
X/CW								
.010	-.0157	-.0471	.4049	.4303	.4404	.5225	.5084	
.020	.0000	.1088	.4195	.2946	.3580	.3796	.3867	-.1310
.040		.1630	.2899					
.050	.0913			.1860	.2223	.2274	.2422	
.069								-.0740
.060				.1388				
.081			.1723					
.085		.2504						
.094	.1019							
.150				.1019	.1236	.1365	.0385	
.157								-.1393
.163		.2238						
.177			.1065					
.229	.1255							
.246		.0963						
.250				.0782	.0632	.0508	.0256	
.274			.0736					
.345								-.1145
.390		.0648						
.400				.0123	-.0003		-.0556	
.402			.0405					
.503								-.2557
.550				-.1065	-.1331			
.565			-.3192					
.600							-.2814	
.637		-.1043						
.650						-.2930		
.670								-.3363
.700					-.3618			
.725				-.2846				
.750						-.7130	-.6565	
.760			-.2910					
.775				-.8067	-.5303			
.798		-.3478						
.808			-.7725					
.834	-.2761							
.839		-.4889						
.850				-.4786	-.4182	-.3383		
.857			-.3684					
.862								-.1978
.865	-.5136							
.879		-.3040						
.900	-.3234			-.2704			-.1849	
.905			-.2061					
.919		-.1891						

AMES 11-073(OA148) -140A/B/C ORB LEFT WING BOT (XEBL75)

ALPHA (4) = 7.959 BETA (1) = -7.893

SECTION (1)LEFT WING BOT SURF DEPENDENT VARIABLE CP

2Y/BW	.2990	.3640	.4270	.5340	.6730	.7800	.8870	.9720
X/CW								
.950								
.953				-.1086	-.2826	-.0896		
.955			-.0930					
.965		-.0916						
1.000	-.0813							
			-.0059		.0044		-.0071	

ALPHA (4) = 7.971 BETA (2) = -3.863 MACH = .59626 Q = 593.97 P = 2388.7 RN/L = 4.8657

SECTION (1)LEFT WING BOT SURF DEPENDENT VARIABLE CP

2Y/BW	.2990	.3640	.4270	.5340	.6730	.7800	.8870	.9720
X/CW								
.010	-.1628	-.2664	.2939	.4358	.4322	.4842	.4540	
.020	.0000	-.0234	.3712	.3176	.3525	.3681	.3610	-.2893
.040		.0493	.2904					
.050	.0243			.2114	.2265	.2378	.2338	
.069								-.1900
.080				.1544				
.081			.1856					
.086		.2064						
.094	.0542							
.150				.1148	.1210	.1263	.0702	
.157								-.1780
.163		.2347						
.177			.1145					
.229	.1053							
.245		.1026						
.250				.0774	.0618	.0506	.0049	
.274			.0773					
.345								-.1682
.390		.0691						
.407				.0038	-.0058		-.0735	
.402			.0367					
.503								-.2898
.550				-.1126	-.1355			
.565			-.2857					
.600							-.2917	
.637		-.1071						
.650						-.2988		
.670								-.3483
.700					-.3641			
.725				-.2945				
.750						-.7154	-.6448	
.760			-.3063					

AMES 11-073(OA148) -140A/B/C ORB LEFT WING BOT (XEBL75)

ALPHA (4) = 7.971 BETA (2) = -3.863

SECTION (1)LEFT WING BOT SURF DEPENDENT VARIABLE CP

2Y/BW	.2990	.3640	.4270	.5340	.6730	.7800	.8870	.9720
X/CW								
.775				-.8021	-.5266			
.798		-.3571						
.808			-.7958					
.834	-.2835							
.839		-.5224						
.850				-.4751	-.4228	-.3632		
.857			-.3720					
.862								-.1957
.865	-.5405							
.879		-.3295						
.900	-.3653			-.2742			-.1903	
.905			-.2259					
.919		-.2297						
.950				-.1168	-.2374	-.1003		
.953			-.1098					
.955		-.1274						
.965	-.1464							
1.000			-.0268		.0069		-.0272	

ALPHA (4) = 8.077 BETA (3) = .178 MACH = .59626 Q = 593.97 P = 2386.7 RN/L = 4.8657

SECTION (1)LEFT WING BOT SURF DEPENDENT VARIABLE CP

2Y/BW	.2990	.3640	.4270	.5340	.6730	.7800	.8870	.9720
X/CW								
.010	-.3629	-.5044	.1479	.4177	.3964	.4270	.3798	
.020	.0000	-.1282	.2870	.3232	.3370	.3457	.3204	-.4511
.040		-.0949	.2818					
.050	-.0578			.2212	.2222	.2230	.2086	
.069								-.3184
.080				.1611				
.081			.1901					
.086		.1428						
.094	-.0022							
.150				.1106	.1245	.1132	.0510	
.157								-.2313
.163		.2232						
.177			.1192					
.229	.0742							
.246		.1022						
.250				.0707	.0527	.0372	-.0172	
.274			.0754					
.345								-.2252
.390		.0662						

AMES 11-073(OA148) -140A/B/C ORB LEFT WING BOT (XEBL75)

ALPHA (4) = 8.077 BETA (3) = .178

SECTION (1)LEFT WING BOT SURF DEPENDENT VARIABLE CP

2Y/BW	.2990	.3640	.4270	.5340	.6730	.7800	.8870	.9720
X/CW								
.400				.0012	-.0153		-.0937	
.402			.0339					
.503								-.3155
.550				-.1118	.1434			
.565			-.2775					
.600							.3045	
.637		-.1107						
.650						-.3055		
.670								-.3529
.700					.3616			
.725				-.2999				
.750						-.7046	-.6432	
.760			.3173					
.775				-.8353	-.4960			
.798		-.3591						
.808			-.8034					
.834	-.2948							
.839		-.5411						
.850				-.4751	-.4322	-.3782		
.857			-.3867					
.862								-.1826
.865	-.5684							
.879		-.3607						
.900	-.3835			-.2608			-.1886	
.905			-.2509					
.919		-.2550						
.950				-.1324	-.2128	-.1121		
.953			-.1336					
.965		-.1565						
.965	-.2335							
1.000			-.0419		-.0003		-.0398	

ALPHA (4) = 8.079 BETA (4) = 5.235 MACH = .59626 Q = 593.97 P = 2388.7 RN/L = 4.8657

SECTION (1)LEFT WING BOT SURF DEPENDENT VARIABLE CP

2Y/BW	.2990	.3640	.4270	.5340	.6730	.7800	.8870	.9720
X/CW								
.010	-.5500	-.6391	-.0255	.3687	.3552	.3453	.2978	
.020	.0000	-.3213	.1741	.3082	.3209	.3172	.2776	-.6745
.040		-.2169	.2430					
.050	-.1540			.2214	.2377	.2154	.1953	
.069								-.4744
.080				.1629				

AMES 11-073(OA148) -140A/B/C ORB LEFT WING BOT (XEBL75)

ALPHA (4) = 8.079 BETA (4) = 4.235

SECTION (1)LEFT WING BOT SURF DEPENDENT VARIABLE CP

2Y/BW	.2990	.3640	.4270	.5340	.6730	.7800	.8870	.9720
X/CW								
.081			.1845					
.086		.0698						
.094	-.0639							
.150				.1083	.1177	.1136	.1319	
.157								-.2899
.163		.1932						
.177			.1172					
.229	.0334							
.246		.0910						
.250				.0697	.0473	.0291	-.0286	
.274			.0730					
.345								-.2811
.390		.0628						
.400				-.0041	-.0213		-.1079	
.402			.0276					
.503								-.3571
.550				-.1166	-.1419			
.565			-.2768					
.600							-.3100	
.637		-.1034						
.650						-.3079		
.670								-.3671
.700					-.3419			
.725				-.2998				
.750						-.6877	-.6478	
.760			-.3186					
.775				-.8494	-.4508			
.798		-.3657						
.808			-.7963					
.834	-.2999							
.839		-.5447						
.850				-.4545	-.4102	-.3790		
.857			-.3894					
.862								-.1810
.865	-.5921							
.879		-.3743						
.900	-.3941			-.2498			-.1899	
.905			-.2598					
.919		-.2721						
.950				-.1360	-.2170	-.1161		
.953			-.1410					
.955		-.1657						
.965	-.3059							
1.000			-.0390		-.0358		-.0354	

AMES 11-073(OA148) -140A/B/C OP3 LEFT WING BOT (XEBL75)

ALPHA (4) = 8.076 BETA (5) = 8.290 MACH = .59626 Q = 593.97 P = 2386.7 RN/L = 4.8657

SECTION (1)LEFT WING BOT SURF DEPENDENT VARIABLE CP

2Y/BW	.2990	.3640	.4270	.5340	.6730	.7800	.8870	.9720
X/CW								
.010	-.7393	-.6160	-.2386	.2918	.2844	.2392	.1975	
.020	.0000	-.4147	.0241	.2747	.2742	.2632	.2205	-.9047
.040		-.3180	.1812					
.050	-.2662			.2041	.2160	.1883	.1554	
.069								-.6231
.080				.1528				
.081			.1640					
.086		-.0113						
.094	-.1480							
.150				.0963	.1017	.0968	.0071	
.157								-.3508
.163		.1543						
.177			.1098					
.229	-.0091							
.246		.0731						
.250				.0537	.0324	.0173	-.0565	
.274			.0667					
.345								-.3454
.390		.0557						
.400				-.0114	-.0324		-.1310	
.402			.0208					
.503								-.3944
.550				-.1272	-.1547			
.565			-.3192					
.600							-.3158	
.637		-.1118						
.650						-.3114		
.670								-.3606
.700					-.3567			
.725				-.3195				
.750						-.6702	-.6294	
.760			-.3284					
.775				-.8386	-.4771			
.798		-.3603						
.808			-.7805					
.834	-.3110							
.839		-.5524						
.850				-.4563	-.3480	-.3896		
.857			-.3989					
.862								-.1757
.865	-.6051							
.879		-.3848						
.900	-.4064			-.2538			-.1837	
.905			-.2678					
.919		-.2862						

DATE 10 FEB 76 TABULATED PRESSURE DATA - OA148 (AMES 11-073-1)

AMES 11-073(OA148) -140A/B/C ORB LEFT WING BOT (XEBL75)

ALPHA (4) = 8.076 BETA (5) = 8.290

SECTION (1)LEFT WING BOT SURF DEPENDENT VARIABLE CP

2Y/BW	.2990	.3640	.4270	.5340	.6730	.7800	.8870	.9720
X/CW								
.950				-.1343	-.1744	-.1034		
.953			-.1394					
.955		-.1839						
.965	-.3424							
1.000			-.0428		-.0343		-.0265	

ALPHA (5) = 11.984 BETA (1) = -7.850 MACH = .59636 Q = 594.09 P = 2386.3 RN/L = 4.8671

SECTION (1)LEFT WING BOT SURF DEPENDENT VARIABLE CP

2Y/BW	.2990	.3640	.4270	.5340	.6730	.7800	.8870	.9720
X/CW								
.010	-.3061	-.5960	.1741	.5909	.5944	.5429	.4905	
.020	.0000	-.1444	.3925	.5411	.5706	.5678	.5277	-.6103
.040		-.0240	.4386					
.050	.0556			.4202	.4527	.4538	.4396	
.069								-.3267
.080				.3423				
.081			.3504					
.086		.2635						
.094	.1179							
.150				.2642	.2946	.2950	.2367	
.157								-.1921
.163		.3485						
.177			.2538					
.229	.1868							
.246		.2256						
.250				.2048	.1986	.1899	.1329	
.274			.1940					
.345								-.1279
.390		.1712						
.400				.1089	.0996		.0305	
.402			.1370					
.503								-.2601
.550				-.0229	-.0485			
.565			-.3308					
.600							-.2328	
.637		-.0306						
.650						-.2313		
.670								-.3497
.700					-.2717			
.725				-.2421				
.750						-.6749	-.6103	
.760			-.2674					

AMES 11-073(OA148) -140A/B/C ORB LEFT WING BOT (XEBL75)

ALPHA (5) = 11.984 BETA (1) = -7.850

SECTION (1)LEFT WING BOT SURF DEPENDENT VARIABLE CP

2Y/BW	.2990	.3640	.4270	.5340	.6730	.7800	.8870	.9720
X/CW								
.775				-.8532	-.4053			
.798		-.3122						
.808			-.7774					
.834	-.2458							
.839		-.4644						
.850				-.4171	-.4125	-.3451		
.857			-.3369					
.852								-.2717
.865	-.4838							
.879		-.2894						
.900	-.2971			-.2262			-.2432	
.905			-.1959					
.919		-.1922						
.950				-.0968	-.2375	-.0998		
.953			-.0880					
.955		-.0928						
.965	-.0870							
1.000			.0040		-.0563		-.0354	

ALPHA (5) = 12.003 BETA (2) = -3.840 MACH = .59636 Q = 594.09 P = 2386.3 RN/L = 4.8371

SECTION (1)LEFT WING BOT SURF DEPENDENT VARIABLE CP

2Y/BW	.2990	.3640	.4270	.5340	.6730	.7800	.8870	.9720
X/CW								
.010	-.5223	-.8420	-.0499	.5078	.5082	.4308	.3698	
.020	.0000	-.3213	.2533	.5000	.5205	.5034	.4508	-.8392
.040		-.1806	.3914					
.050	-.0422			.4080	.4418	.4332	.3994	
.069								-.4838
.080				.3344				
.081			.3290					
.086		.1801						
.094	.0463							
.150				.2538	.2782	.2826	.1982	
.157								-.2541
.163		.3230						
.177			.2462					
.229	.1467							
.246		.2184						
.250				.1939	.1871	.1722	.1117	
.274			.1904					
.345								-.1997
.390		.1737						

AMES 11-073(OA148) -140A/B/C ORB LEFT WING BOT (XEBL75)

ALPHA (5) = 12.003 BETA (2) = -3.840

SECTION (1)LEFT WING BOT SURF DEPENDENT VARIABLE CP

2Y/BW	.2990	.3640	.4270	.5340	.6730	.7800	.8870	.9720
X/CW								
.400				.1057	.0925		-.0002	
.402			.1278					
.503								-.3084
.550				-.0327	-.0632			
.565			-.2941					
.600							-.2536	
.637		-.0318						
.650						-.2455		
.670								-.3840
.700					-.3001			
.725				-.2558				
.750						-.6878	-.6346	
.760			-.2742					
.775				-.8728	-.4392			
.798		-.3127						
.808			-.8001					
.834	-.2487							
.839		-.4970						
.850				-.4348	-.3987	-.3609		
.857			-.3542					
.862								-.2717
.865	-.5108							
.879		-.3203						
.900	-.3304			-.2268			-.2292	
.905			-.2206					
.919		-.2289						
.950				-.0983	-.2358	-.0985		
.953			-.1048					
.955		-.1304						
.965	-.1631							
1.000			-.0189		-.0288		-.0396	

ALPHA (5) = 12.008 BETA (3) = .180 MACH = .59636 Q = 594.09 P = 2386.3 RN/L = 4.8671

SECTION (1)LEFT WING BOT SURF DEPENDENT VARIABLE CP

2Y/BW	.2990	.3640	.4270	.5340	.6730	.7800	.8870	.9720
X/CW								
.010	-.7679	-1.0557	-.2843	.4050	.4039	.2867	.2315	
.020	.0000	-.5034	.0903	.4379	.4474	.4258	.3549	-1.0696
.040		-.3539	.3188					
.050	-.1625			.3764	.3991	.3809	.3345	
.069								-.6536
.080				.3120				

AMES 11-073(OA148) -140A/B/C ORB LEFT WING BOT (XESL75)

ALPHA (5) = 12.008 BETA (3) = .180

SECTION (1)LEFT WING BOT SURF DEPENDENT VARIABLE CP

2Y/BW	.2990	.3640	.4270	.5340	.6730	.7800	.8870	.9720
X/CW								
.081			.2998					
.086		.0847						
.094	-.0398							
.150				.2318	.2579	.2492	.1629	
.157								-.3201
.163		.2847						
.177			.2317					
.229	.0966							
.246		.1938						
.250				.1778	.1684	.1481	.0740	
.274			.1769					
.345								-.2653
.390		.1572						
.400				0853	.0704		-.0366	
.402			.1155					
.503								-.3457
.550				-.0417	-.0785			
.565			-.2698					
.600							-.2718	
.637		-.0393						
.650						-.2696		
.670								-.3804
.700					-.3231			
.725				-.2713				
.750						-.6871	-.6527	
.760			-.2942					
.775				-.9187	-.4682			
.798		-.3299						
.808			-.8145					
.834	-.2678							
.839		-.5266						
.850				-.4400	-.3690	-.3730		
.857			-.3818					
.862								-.2655
.865	-.5407							
.879		-.3529						
.900	-.3618			-.2321			-.2251	
.905			-.2530					
.919		-.2599						
.950				-.1087	.2083	-.1174		
.953			-.1315					
.955		-.1555						
.965	-.2579							
1.000			-.0174		-.0347		-.0295	

AMES 11-073(OA148) -140A/B/C ORB LEFT WING BOT (XEBL75)

ALPHA (5) = 12.057 BETA (4) = 4.244 MACH = .59636 Q = 594.09 P = 2386.3 RN/L = 4.8671

SECTION (1)LEFT WING BOT SURF DEPENDENT VARIABLE CP

2Y/BW	.2990	.3640	.4270	.5340	.6730	.7800	.8870	.9720
X/CW								
.010	-.9663	-.9609	-.4904	.2755	.2801	.1106	.0644	
.020	.0000	-.5904	-.0788	.3591	.3585	.3246	.2469	-1.2561
.040		-.4538	.2285					
.050	-.2884			.3343	.3478	.3281	.2749	
.069								-.8045
.080				.2778				
.081			.2536					
.086		-.0087						
.094	-.1333							
.150				.2087	.2277	.2243	.1265	
.157								-.3558
.163		.2291						
.177			.2067					
.229	.0405							
.246		.1636						
.250				.1509	.1490	.1215	.0513	
.274			.1579					
.345								-.3083
.390		.1416						
.400				.0716	.0559		-.0511	
.402			.1000					
.503								-.3685
.550				-.0561	-.0968			
.565			-.2922					
.600							-.2872	
.637		-.0485						
.650						-.2807		
.670								-.3656
.700					-.3315			
.725				-.2807				
.750						-.6765	-.6340	
.760			-.3090					
.775				-.8958	-.4744			
.798		-.3377						
.808			-.7939					
.834	-.2798							
.839		-.5387						
.850				-.4470	-.3607	-.3913		
.857			-.3906					
.862								-.2446
.865	-.5766							
.879		-.3727						
.900	-.3898			-.2556			-.2385	
.905			-.2621					
.919		-.2783						

AMES 11-073(OA148) -140A/B/C ORB LEFT WING BOT (XEBL75)

ALPHA (5) = 12.057 BETA (4) = 4.244

SECTION (1)LEFT WING BOT SURF DEPENDENT VARIABLE CP

2Y/BW	.2990	.3640	.4270	.5340	.6730	.7800	.8870	.9720
X/CW								
.950				-.1370	-.2025	-.1358		
.953			-.1321					
.955		-.1726						
.965	-.3291							
1.000			-.0062		-.0371		-.0684	

ALPHA (5) = 12.114 BETA (5) = 8.307 MACH = .59636 Q = 594.09 P = 2386.3 RN/L = 4.8671

SECTION (1)LEFT WING BOT SURF DEPENDENT VARIABLE CP

2Y/BW	.2990	.3640	.4270	.5340	.6730	.7800	.8870	.9720
X/CW								
.010	-1.2324	-.7357	-.7272	.1057	.1276	-.0940	-.1251	
.020	.0000	-.6344	-.2829	.2542	.2495	.2062	.1193	-1.3828
.040		-.5252	.1220					
.050	-.4289			.2786	.2958	.2590	.1999	
.069								-.9046
.080				.2424				
.081			.2069					
.086		-.0942						
.094	-.2351							
.150				.1847	.2035	.1932	.0893	
.157								-.3908
.163		.1687						
.177			.1894					
.229	-.0175							
.246		.1245						
.250				.1328	.1236	.1015	.0176	
.274			.1417					
.345								-.3379
.390		.1222						
.400				.0540	.0402		-.0753	
.402			.0784					
.503								-.3788
.550				-.0641	-.1000			
.565			-.3277					
.600							-.2899	
.637		-.0544						
.650						-.2809		
.670								-.3526
.700					-.3260			
.725				-.2822				
.750						-.6522	-.6208	
.760			-.3168					

AMES 11-073(OA148) -140A/B/C ORB LEFT WING BOT (XEBL75)

ALPHA (5) = 12.114 BETA (5) = 8.307

SECTION (1)LEFT WING BOT SURF DEPENDENT VARIABLE CP

2Y/BW	.2990	.3640	.4270	.5340	.6730	.7800	.8870	.9720
X/CW								
.775				-.9145	-.4578			
.798		-.3346						
.808			-.7740					
.834	-.2822							
.833		-.5338						
.850				-.4316	-.3502	-.3884		
.857			-.4010					
.862								-.2369
.865	-.5868							
.879		-.3770						
.900	-.4048			-.2561			-.2391	
.905			-.2661					
.919		-.2963						
.950				-.1561	-.2001	-.1489		
.953			-.1374					
.955		-.1951						
.965	-.3481							
1.000			-.0245		-.0704		-.0653	

AMES 11-073(OA148) -140A/B/C QRB LEFT WING BOT (XEBL76) (05 AUG 75)

REFERENCE DATA

SREF = 2690.0000 SQ.FT. XMRP = 1076.6800 IN. XO
LREF = 474.8000 IN. YMRP = .0000 IN. YO
BREF = 936.0680 IN. ZMRP = 375.0000 IN. ZO
SCALE = .0300

PARAMETRIC DATA

RUDDER = -10.000 SPDBRK = .000
BDFLAP = -11.700 L-ELVN = 10.000
R-ELVN = -10.000 MACH = 1.400

ALPHA (1) = -4.004 BETA (1) = -3.853 MACH = 1.3930 Q = 598.57 P = 440.65 RN/L = 2.9057

SECTION (1)LEFT WING BOT SURF DEPENDENT VARIABLE CP

2Y/BW	.2990	.3640	.4270	.5340	.6730	.7800	.8870	.9720
X/CW								
.010	-.1834	-.2388	-.1361	-.2782	-.3598	-.2211	-.1927	
.020	.0000	-.2268	-.2434	-.4171	-.4003	-.4153	-.4091	-.4599
.040		-.2299	-.3041					
.050	-.1521			-.4492	-.4328	-.4471	-.4397	
.069								-.4963
.080				-.4441				
.081			-.1899					
.086		-.1239						
.094	-.1402							
.150				-.4014	-.3940	-.3985	-.4019	
.157								-.3077
.163		-.0356						
.177			-.1782					
.229	-.1014							
.246		-.1157						
.250				-.2166	-.3636	-.3606	-.3724	
.274			-.1651					
.345								-.4397
.390		-.1428						
.400				-.1771	-.3119		-.3348	
.402			-.1565					
.503								-.4198
.550				-.1431	-.1598			
.565			-.2953					
.600							-.3233	
.637		-.1011						
.650						-.3245		
.670								-.3149
.700					-.2141			
.725				-.1814				
.750						-.0001	-.0905	
.760			-.1890					
.775				.0309	-.0014			
.798		-.1701						
.808			.0634					
.834	-.1903							
.839		.0381						
.850				-.0309	-.0599	-.0408		

AMES 11-073(OA148) -140A/B/C ORB LEFT WING BOT (XEBL76)

ALPHA (1) = -4.004 BETA (1) = -3.853

SECTION (1)LEFT WING BOT SURF DEPENDENT VARIABLE CP

2Y/BW	.2990	.3640	.4270	.5340	.6730	.7800	.8870	.9720
X/CW								
.857			-.0033					
.862								-.3463
.865	.0566							
.879		-.0288						
.900	-.0701			-.1137			-.2312	
.905			-.0872					
.919		-.1075						
.950				-.1592	-.1246	-.1347		
.953			-.1490					
.955		-.1526						
.965	-.1438							
1.000			-.2148		-.1090		-.3642	

ALPHA (1) = -4.001 BETA (2) = .191 MACH = 1.3930 Q = 598.57 P = 440.65 RN/L = 2.9057

SECTION (1)LEFT WING BOT SURF DEPENDENT VARIABLE CP

2Y/BW	.2990	.3640	.4270	.5340	.6730	.7800	.8870	.9720
X/CW								
.010	-.0963	-.1196	-.0627	-.2789	-.3799	-.2649	-.2421	
.020	.0000	-.1216	-.1279	-.4145	-.4225	-.4412	-.4433	-.5055
.040		-.1180	-.1800					
.050	-.0956			-.4326	-.4474	-.4709	-.4728	
.069								-.5218
.080				-.3904				
.081			-.1583					
.086		-.0560						
.094	-.1008							
.150				-.3097	-.3993	-.4146	-.4269	
.157								-.3196
.163		.0115						
.177			-.1327					
.229	-.0754							
.245		-.0770						
.250				-.1652	-.3557	-.3736	-.3967	
.274			-.1299					
.345								-.4694
.390		-.1024						
.400				-.1470	-.1598		-.3493	
.402			-.1186					
.503								-.4546
.550				-.1092	-.1438			
.565			-.3179					
.600							-.3249	

AMES 11-073(OA148) -140A/B/C ORB LEFT WING BOT (XEBL76)

ALPHA (1) = -4.001 BETA (2) = .191

SECTION (1)LEFT WING BOT SURF DEPENDENT VARIABLE CP

2Y/BW	.2990	.3640	.4270	.5340	.6730	.7800	.8870	.9720
X/CW								
.637		-.0854						
.650						-.1963		
.670								-.3402
.700					-.1809			
.725				-.1628				
.750						.0859	-.0413	
.760			-.1717					
.775				.0622	.0235			
.798		-.1584						
.808			.0819					
.834	-.1762							
.839		.0478						
.850				-.0097	-.0532	-.0097		
.857			-.0003					
.862								-.3515
.865	.0340							
.879		-.0322						
.900	-.0852			-.1001			-.0882	
.905			-.0876					
.919		-.1136						
.950				-.1530	-.1090	-.1245		
.953			-.1444					
.955		-.1521						
.965	-.1525							
1.000			-.2448		-.1419		-.2113	

ALPHA (1) = -3.983 BETA (3) = 4.275 MACH = 1.3930 Q = 598.57 P = 440.65 RN/L = 2.9057

SECTION (1)LEFT WING BOT SURF DEPENDENT VARIABLE CP

2Y/BW	.2990	.3640	.4270	.5340	.6730	.7800	.8870	.9720
X/CW								
.010	-.0767	-.0363	.0429	-.2755	-.3952	-.2985	-.2828	
.020	.0000	-.0485	.0142	-.4036	-.4332	-.4626	-.4654	-.5339
.040		-.0439	-.0711					
.050	-.0830			-.3621	-.4527	-.4878	-.4908	
.069								-.5327
.080				-.3474				
.081			-.0965					
.086		-.0048						
.094	-.0859							
.150				-.1824	-.3926	-.4256	-.4456	
.157								-.3270
.163		.0530						

DATE 10 FEB 76 TABULATED PRESSURE DATA - OA148 (AMES 11-073-1)

AMES 11-073(OA148) -140A/B/C ORB LEFT WING BOT (XEBL76)

ALPHA (1) = -3.983 BETA (3) = 4.275

SECTION (1)LEFT WING BOT SURF DEPENDENT VARIABLE CP

2Y/BW	.2990	.3640	.4270	.5340	.6730	.7800	.8870	.9720
X/CW								
.177			-.0996					
.229	-.0547							
.246		-.0458						
.250				-.1322	-.1833	-.3699	-.4117	
.274			-.0867					
.345								-.4721
.390		-.0612						
.400				-.1090	-.1286		-.3592	
.402			-.0843					
.503								-.4314
.550				-.0897	-.1084			
.565			-.3077					
.600							-.1676	
.637		-.0648						
.650						-.1638		
.670								-.2193
.700					-.1567			
.725				-.1479				
.750						.1065	.1141	
.760			-.1554					
.775				.0898	.0483			
.798		-.1503						
.808			.0872					
.834	-.1751							
.839		.0404						
.850				.0081	-.0426	.0066		
.857			-.0016					
.862								-.1424
.865	.0595							
.879		-.0334						
.900	-.0753			-.0821			-.0302	
.905			-.0857					
.919		-.1064						
.950				-.1538	-.0998	-.1014		
.953			-.1413					
.955		-.1433						
.965	-.1468							
1.000			-.2335		-.1725		-.1858	

AMES 11-073(OA148) -140A/B/C ORB LEFT WING BOT (XEBL76)

ALPHA (2) = .029 BETA (1) = -3.866 MACH = 1.3913 Q = 598.64 P = 441.83 RN/L = 2.9093

SECTION (1)LEFT WING BOT SURF DEPENDENT VARIABLE CP

2Y/BW	.2990	.3640	.4270	.5340	.6730	.7800	.8870	.9720
X/CW								
.010	-.0038	.0183	.2145	-.0867	-.1813	-.1073	-.0184	
.020	.0000	-.0098	.1570	-.2193	-.2305	-.2418	-.2602	-.2179
.040		-.0103	.0203					
.050	-.0324			-.2210	-.2345	-.2672	-.2779	
.069								-.2486
.080				-.1735				
.081			-.0323					
.086		.0312						
.094	-.0457							
.150				-.1260	-.1792	-.2010	-.2224	
.157								-.1919
.163		.1038						
.177			-.0422					
.229	-.0390							
.246		-.0107						
.250				-.0648	-.1286	-.1571	-.1857	
.274			-.0404					
.345								-.1665
.390		-.0361						
.400				-.0624	-.0483		-.1495	
.402			-.0486					
.503								-.1623
.550				-.0359	-.0497			
.565			-.3668					
.600							-.1138	
.637		-.0239						
.650						-.1079		
.670								.0073
.700					-.1265			
.725				-.1064				
.750						.2041	.2010	
.760			-.1288					
.775				.1518	.1225			
.798		-.1293						
.808			.1592					
.834	-.1421							
.839		.1366						
.850				.0605	.0376	.0809		
.857			.0821					
.862								-.0843
.865	.1590							
.879		.0294						
.900	-.0050			-.0405			.0095	
.905			-.0118					
.919		-.0411						

AMES 11-073(OA148) -140A/B/C ORB LEFT WING BOT (XEBL76)

ALPHA (2) = .029 BETA (1) = -3.866

SECTION (1)LEFT WING BOT SURF DEPENDENT VARIABLE CP

2Y/BW	.2990	.3640	.4270	.5340	.6730	.7800	.8870	.9720
X/CW								
.950				-.0870	-.0519	-.0781		
.953			-.0857					
.955		-.1043						
.965	-.0999							
1.000			-.1521		-.1114		-.3415	

ALPHA (2) = .033 BETA (2) = .181 MACH = 1.3913 Q = 598.64 P = 441.83 RN/L = 2.9093

SECTION (1)LEFT WING BOT SURF DEPENDENT VARIABLE CP

2Y/BW	.2990	.3640	.4270	.5340	.6730	.7800	.8870	.9720
X/CW								
.010	-.0206	.0002	.2495	-.0800	-.1989	-.1423	-.0671	
.020	.0000	-.0072	.2265	-.1848	-.2298	-.2571	-.2893	-.2453
.040		.0016	.0703					
.050	-.0196			-.1055	-.1890	-.2607	-.3015	
.069								-.2580
.080				-.1041				
.081			.0113					
.086		.0452						
.094	-.0341							
.150				-.0740	-.1314	-.1732	-.2175	
.157								-.1849
.163		.1190						
.177			-.0105					
.229	-.0413							
.246		.0114						
.250				-.0408	-.0530	-.1064	-.1825	
.274			-.0186					
.345								-.1185
.390		-.0130						
.400				-.0384	-.0381		-.0702	
.402			-.0265					
.503								-.1061
.550				-.0205	-.0309			
.565			-.3628					
.600							-.0904	
.637		-.0118						
.650						-.0901		
.670								.0374
.700					-.1062			
.725				-.0936				
.750						.2069	.1946	
.760			-.1102					

AMES 11-073(OA148) -140A/B/C ORB LEFT WING BOT (XEBL76)

ALPHA (2) = .033 BETA (2) = .181

SECTION (1)LEFT WING BOT SURF DEPENDENT VARIABLE CP

2Y/BW	.2990	.3640	.4270	.5340	.6730	.7800	.8870	.9720
X/CW								
.775				.1795	.1431			
.799		-.1147						
.808			.1799					
.834	-.1285							
.839		.1438						
.850				.0771	.0357	.0770		
.857			.0864					
.862								-.1061
.865	.1411							
.879		.0441						
.930	-.0163			-.0274			.0128	
.935			-.0155					
.919		-.0494						
.950				-.0848	-.0477	-.0683		
.953			-.0851					
.955		-.1016						
.965	-.1060							
1.000			-.1705		-.0966		-.3338	

ALPHA (2) = .029 BETA (3) = 4.255 MACH = 1.3913 Q = 598.64 P = 441.83 RN/L = 2.9093

SECTION (1)LEFT WING BOT SURF DEPENDENT VARIABLE CP

2Y/BW	.2990	.3640	.4270	.5340	.6730	.7800	.8870	.9720
X/CW								
.010	-.0731	-.0583	.2704	-.0257	-.1842	-.1632	-.0984	
.020	.0000	-.0401	.2556	-.0190	-.1237	-.2509	-.3001	-.1928
.040		-.0228	.1194					
.050	-.0554			-.0837	-.1919	-.2330	-.2934	
.069								-.1871
.080				-.0649				
.081			.0477					
.086		.0422						
.094	-.0576							
.150				-.0488	-.0790	-.1348	-.2012	
.157								-.1648
.163		.1195						
.177			.0033					
.229	-.0538							
.246		.0279						
.250				-.0171	-.0414	-.0412	-.0688	
.274			.0066					
.345								
.390		.0102						-.0636

AMES 11-073(OA148) -140A/B/C ORB LEFT WING BOT (XE9L76)

ALPHA (2) = .029 BETA (3) = 4.255

SECTION (1)LEFT WING BOT SURF DEPENDENT VARIABLE CP

2Y/BW	.2990	.3640	.4270	.5340	.6730	.7800	.8870	.9720
X/CW								
.400				-.0126	-.0136		-.0561	
.402			-.0027					
.503								-.1093
.550				-.0087	-.0136			
.565			-.3530					
.600							-.0719	
.637		.0016						
.650						-.0728		
.670								.0548
.700					-.0903			
.725				-.0820				
.750						.2258	.2078	
.760			-.1035					
.775				.2076	.1619			
.798		-.1023						
.809			.1911					
.834	-.1242							
.839		.1220						
.850				.0949	.0429	.0812		
.857			.0807					
.862								-.1077
.865	.1356							
.879		.0356						
.900	-.0179			-.0159			.0203	
.905			-.0204					
.919		-.0483						
.950				-.0908	-.0352	-.0395		
.953			-.0899					
.955		-.0953						
.965	-.1052							
1.000			-.1473		-.1082		-.2922	

ALPHA (3) = 3.961 BETA (1) = -3.871 MACH = 1.3919 Q = 599.88 P = 442.29 RN/L = 2.9174

SECTION (1)LEFT WING BOT SURF DEPENDENT VARIABLE CP

2Y/BW	.2990	.3640	.4270	.5340	.6730	.7800	.8870	.9720
X/CW								
.010	.0510	.0109	.4041	.2628	.1870	.1841	.2136	
.020	.0000	.0369	.3809	.1826	.1733	.0908	.0440	.0903
.040		.0551	.2210					
.050	.0432			.0568	.0246	.0344	.0325	
.060								.0547
.080				.0554				

AMES 11-073(OA14B) -140A/B/C ORB LEFT WING BOT (XEBL78)

ALPHA (3) = 3.961 BETA (1) = -3.871

SECTION (1)LEFT WING BOT SURF DEPENDENT VARIABLE CP

2Y/BW	.2990	.3640	.4270	.5340	.6730	.7800	.8870	.9720
X/CW								
.081			.1314					
.086		.1112						
.094	.0332							
.150				.0523	.0625	.0724	.0834	
.157								-.0698
.163		.2047						
.177			.0872					
.229	.0242							
.246		.0821						
.250				.0768	.0738	.0868	.0666	
.274			.0717					
.345								.0344
.390		.0709						
.400				.0694	.0795		.0587	
.402			.0653					
.503								-.0124
.550				.0708	.0793			
.555			-.4011					
.600							.0022	
.637		.0589						
.650						.0123		
.670								.1425
.700					-.0226			
.725				-.0208				
.750						.3813	.3074	
.760			-.0527					
.775				.2927	.2719			
.798		-.0622						
.808			.2721					
.834	-.0765							
.839		.2360						
.850				.1581	.1303	.1676		
.857			.1773					
.862								-.0135
.865	.2558							
.879		.1043						
.900	.0588			.0526			.1099	
.905			.0641					
.919		.0250						
.950				-.0053	.0341	-.0011		
.953			-.0207					
.955		-.0521						
.955	-.0578							
1.000			-.0983		-.2146		-.4000	

AMES 11-073(OA148) -140A/B/C ORB LEFT WING BOT (XEBL76)

ALPHA (3) = 3.962 BETA (2) = .187 MACH = 1.3919 Q = 599.88 P = 442.29 RN/L = 2.9174

SECTION (1)LEFT WING BOT SURF DEPENDENT VARIABLE CP

2Y/BW	.2990	.3640	.4270	.5340	.6730	.7800	.8870	.9720
X/CW								
.010	-.0343	-.1502	.3522	.3026	.2073	.1933	.2051	
.020	.0000	-.0590	.3560	.2231	.1794	.1155	.0587	.0565
.040		-.0299	.2302					
.050	.0149			.1096	.0628	.0914	.0542	
.069								.0321
.080				.0971				
.081			.1475					
.086		.0660						
.094	.0108							
.150				.0741	.0830	.0962	.1064	
.157								-.0793
.163		.1827						
.177			.1017					
.229	.0051							
.246		.0939						
.250				.0886	.0849	.0938	.0665	
.274			.0931					
.345								.0093
.390		.0822						
.400				.0833	.0921		.0591	
.402			.0774					
.503								-.0343
.550				.0782	.0839			
.565			-.3996					
.600							.0134	
.637		.0712						
.650						.0164		
.670								.1377
.700					-.0243			
.725				-.0164				
.750						.3803	.3045	
.760			-.0401					
.775				.3110	.2622			
.798		-.0471						
.808			.2886					
.834	-.0599							
.839		.2328						
.850				.1712	.1246	.1538		
.857			.1835					
.862								-.0334
.865	.2380							
.870		.1212						
.900	.0646			.0608			.0928	
.905			.0702					
.919		.0292						

AMES 11-073(OA148) -140A/B/C ORB LEFT WING BOT (XEBL76)

ALPHA (3) = 3.962 BETA (2) = .187

SECTION (1)LEFT WING BOT SURF DEPENDENT VARIABLE CP

2Y/BW	.2990	.3640	.4270	.5340	.6730	.7800	.8870	.9720
X/CW								
.950				-.0001	.0292	.0013		
.953			-.0199					
.955		-.0409						
.965	-.0565							
1.000			-.1324		-.1593		-.4215	

ALPHA (3) = 3.963 BETA (3) = 4.246 MACH = 1.3919 Q = 599.88 P = 442.29 RN/L = 2.9174

SECTION (1)LEFT WING BOT SURF DEPENDENT VARIABLE CP

2Y/BW	.2990	.3640	.4270	.5340	.6730	.7800	.8870	.9720
X/CW								
.010	-.1674	-.3851	.2626	.3416	.2352	.2192	.2458	
.020	.0000	-.1948	.3005	.2709	.2058	.1565	.1247	-.0032
.040		-.1498	.2327					
.050	-.0502			.1582	.1027	.1141	.1154	
.069								-.0044
.080				.1347				
.081			.1558					
.086		-.0138						
.094	-.0337							
.150				.0907	.1140	.1198	.1256	
.157								-.0937
.163		.1478						
.177			.1001					
.229	-.0232							
.246		.0892						
.250				.1039	.0982	.1059	.0794	
.274			.1097					
.345								-.0074
.390		.0892						
.400				.0943	.1198		.0743	
.402			.0891					
.503								-.0378
.550				.0837	.0910			
.555			-.3996					
.600							.0248	
.637		.0811						
.650						.0236		
.670								.1308
.700					-.0124			
.725				-.0053				
.750						.3564	.3054	
.760			-.0315					

AMES 11-073(OA148) -140A/B/C ORB LEFT WING BOT (XEBL76)

ALPHA (3) = 3.963 BETA (3) = 4.246

SECTION (1)LEFT WING BOT SURF DEPENDENT VARIABLE CP

2Y/BW	.2990	.3640	.4270	.5340	.6730	.7800	.8870	.9720
X/CW								
.775				.3494	.2771			
.799		-.0274						
.808			.2898					
.834	-.0562							
.839		.2136						
.850				.1831	.1356	.1581		
.857			.1646					
.862								-.0464
.865	.2253							
.879		.1148						
.900	.0595			.0562			.0818	
.905			.0552					
.919		.0200						
.950				-.0149	.0297	.0269		
.953			-.0148					
.955		-.0304						
.965	-.0443							
1.000			-.1488		-.1540		-.3815	

ALPHA (4) = 7.887 BETA (1) = -3.866 MACH = 1.3932 Q = 600.00 P = 441.59 RN/L = 2.9153

SECTION (1)LEFT WING BOT SURF DEPENDENT VARIABLE CP

2Y/BW	.2990	.3640	.4270	.5340	.6730	.7800	.8870	.9720
X/CW								
.010	.0060	-.1273	.4346	.5236	.4658	.5278	.5434	
.020	.0000	.0035	.4635	.3917	.4112	.4176	.3997	.1357
.040		.0424	.3588					
.050	.0833			.2876	.2804	.3201	.3563	
.069								.1544
.080				.2494				
.081			.2622					
.086		.1537						
.094	.0856							
.150				.1942	.2595	.2864	.2933	
.157								-.0281
.163		.2919						
.177			.2025					
.229	.0884							
.246		.1769						
.250				.2081	.2265	.2452	.2224	
.274			.1943					
.345								.1334
.390		.1778						

AMES 11-073(OA148) -140A/B/C ORB LEFT WING BOT (XEBL76)

ALPHA (4) = 7.887 BETA (1) = -3.866

SECTION (1)LEFT WING BOT SURF DEPENDENT VARIABLE CP

2Y/BW	.2990	.3640	.4270	.5340	.6730	.7800	.8870	.9720
X/CW								
.400				.1949	.2435		.2040	
.402			.1790					
.503								.0837
.550				.1742	.1968			
.565			-.4243					
.600							.1199	
.637		.1522						
.650						.1072		
.670								.2773
.700					.0663			
.725				.0703				
.750						.4842	.4423	
.760			.0289					
.775				.4615	.3886			
.798		.0191						
.808			.4207					
.834	.0008							
.839		.3599						
.850				.2648	.2375	.2440		
.857			.2830					
.862								.0545
.865	.3635							
.879		.2180						
.900	.1430			.1539			.1779	
.905			.1365					
.919		.1034						
.950				.0739	.1120	.0945		
.953			.0504					
.955		.0126						
.965	-.0064							
1.000			-.1466		-.2925		-.4858	

ALPHA (4) = 7.964 BETA (2) = .189 MACH = 1.3932 Q = 600.00 P = 441.59 RN/L = 2.9153

SECTION (1)LEFT WING BOT SURF DEPENDENT VARIABLE CP

2Y/BW	.2990	.3640	.4270	.5340	.6730	.7800	.8870	.9720
X/CW								
.010	-.1405	-.3490	.2797	.5270	.4683	.5340	.5270	
.020	.0000	-.1316	.3577	.4216	.4186	.4381	.4141	.0177
.040		-.0771	.3252					
.050	.0228			.3197	.2963	.3334	.3645	
.069								.0606
.080				.2707				

AMES 11-073(OA148) -140A/B/C ORB LEFT WING BOT (XEBL76)

ALPHA (4) = 7.964 BETA (2) = .189

SECTION (1)LEFT WING BOT SURF DEPENDENT VARIABLE CP

2Y/BW	.2990	.3640	.4270	.5340	.6730	.7800	.8870	.9720
X/CW								
.081			.2477					
.086		.0700						
.094	.0421							
.150				.2013	.2630	.2812	.2858	
.157								-.0534
.163		.2374						
.177			.1942					
.229	.0529							
.246		.1633						
.250				.2058	.2305	.2443	.2163	
.274			.1961					
.345								.0849
.390		.1736						
.400				.1945	.2374		.2072	
.402			.1767					
.503								.0386
.550				.1742	.'926			
.565			-.4546					
.600							.1018	
.637		.1556						
.650						.0997		
.670								.2331
.700					.0628			
.725				.0647				
.750						.4568	.4156	
.760			.0371					
.775				.4738	.3849			
.798		.0324						
.808			.4294					
.834	.0156							
.840		.3452						
.840				.2752	.2374	.2477		
.857			.2769					
.862								.0135
.865	.3496							
.879		.2150						
.900	.1551			.1459			.1507	
.905			.1344					
.919		.1000						
.950				.0666	.1045	.0939		
.953			.0469					
.955		.0276						
.965	.0184							
1.000			-.1757		-.2621		-.4882	

AMES 11+073(OA148) -140A/B/C ORB LEFT WING BOT (XEBL76)

ALPHA (4) = 7.961 BETA (3) = 4.247 MACH = 1.3932 Q = 600.00 P = 441.59 RN/L = 2.9153

SECTION (1)LEFT WING BOT SURF DEPENDENT VARIABLE CP

2Y/BW	.2990	.3640	.4270	.5340	.6730	.7800	.8870	.9720
X/CW								
.010	-.2876	-.4358	.0966	.4845	.4550	.5091	.5004	
.020	.0000	-.2268	.2155	.4211	.4146	.4331	.4177	-.1062
.040		-.1715	.2566					
.050	-.0557			.3179	.3090	.3297	.3660	
.069								-.0272
.080				.2636				
.081			.1997					
.086		-.0020						
.094	-.0183							
.150				.2098	.2600	.2732	.2830	
.157								-.0809
.163		.1765						
.177			.1710					
.229	.0188							
.246		.1336						
.250				.2008	.2241	.2377	.2246	
.274			.1892					
.345								.0392
.390		.1578						
.400				.1926	.2306		.2159	
.402			.1712					
.503								.0038
.550				.1745	.1898			
.565			-.4291					
.600							.0940	
.637		.1590						
.650						.1096		
.670								.2136
.700					.0682			
.725				.0658				
.750						.4470	.4224	
.760			.0378					
.775				.4808	.3958			
.798		.0574						
.808			.3969					
.834	.0152							
.839		.3180						
.850				.2727	.2368	.2638		
.857			.2544					
.862								-.0007
.865	.3166							
.879		.2076						
.900	.1565			.1415			.1453	
.905			.1306					
.919		.1054						

AMES 11-073(OA148) -140A/B/C ORB LEFT WING BOT (XEBL76)

ALPHA (4) = 7.961 BETA (3) = 4.247

SECTION (1)LEFT WING BOT SURF DEPENDENT VARIABLE CP

2Y/BW	.2990	.3640	.4270	.5340	.6730	.7800	.8670	.9720
X/CW								
.950				.0588	.0957	.1123		
.953			.0510					
.955		.0363						
.965	.0332							
1.000			-.1599		-.1816		-.4454	

ALPHA (5) = 11.871 BETA (1) = -3.849 MACH = 1.3930 Q = 600.10 P = 441.82 RN/L = 2.9227

SECTION (1)LEFT WING BOT SURF DEPENDENT VARIABLE CP

2Y/BW	.2990	.3640	.4270	.5340	.6730	.7800	.8870	.9720
X/CW								
.010	-.1132	-.2875	.3670	.6839	.6614	.7257	.7306	
.020	.0000	-.0397	.4745	.5781	.6078	.6289	.6473	.0725
.040		.0215	.4604					
.050	.1027			.4787	.4927	.5154	.5623	
.069								.1541
.080				.4092				
.081			.3806					
.086		.1842						
.094	.1309							
.150				.3506	.4129	.4450	.4459	
.157								.0014
.163		.3723						
.177			.3178					
.229	.1557							
.246		.2755						
.250				.3411	.3691	.4014	.3841	
.274			.3178					
.345								.1816
.390		.2949						
.400				.3176	.3846		.3604	
.402			.2934					
.503								.1524
.550				.2977	.3193			
.565			-.4535					
.600							.1967	
.637		.2631						
.650						.2065		
.670								.3609
.700					.1601			
.725				.1651				
.750						.6296	.5600	
.760			.1400					

AMES 11-073(OA148) -140A/B/C ORB LEFT WING BOT (XEBL76)

ALPHA (5) = 11.871 BETA (1) = -3.849

SECTION (1)LEFT WING BOT SURF DEPENDENT VARIABLE CP

2Y/BW	.2990	.3640	.4270	.5340	.6730	.7800	.8870	.9720
X/CW								
.775				.6739	.5408			
.798		.1332						
.808			.5713					
.834	.1148							
.839		.4797						
.850				.3705	.3332	.3442		
.857			.3684					
.862								.1041
.865	.5110							
.879		.2901						
.900	.2504			.2295			.2400	
.905			.2036					
.919		.1752						
.950				.1325	.1752	.1728		
.953			.1159					
.955		.0823						
.965	.0599							
1.000			-.1393		-.3279		-.5378	

ALPHA (5) = 11.913 BETA (2) = .191 MACH = 1.3930 Q = 600.10 P = 441.82 RN/L = 2.9227

SECTION (1)LEFT WING BOT SURF DEPENDENT VARIABLE CP

2Y/BW	.2990	.3640	.4270	.5340	.6730	.7800	.8870	.9720
X/CW								
.010	-.2518	-.3870	.1861	.6213	.6204	.6651	.6648	
.020	.0000	-.1462	.3268	.5464	.5764	.5991	.6085	-.0811
.040		-.0835	.3818					
.050	.0289			.4566	.4796	.4949	.5318	
.069								.0414
.080				.3949				
.091			.3168					
.086		.1045						
.094	.0715							
.150				.3449	.4008	.4201	.4308	
.157								-.0356
.163		.3017						
.177			.2933					
.179	.1175							
.246		.2366						
.250				.3219	.3522	.3868	.3608	
.274			.3031					
.345								.1215
.390		.2739						

AMES 11-073(OA148) -140A/B/C ORB LEFT WING BOT (XEBL76)

ALPHA (5) = 11.913 BETA (2) = .191

SECTION (1)LEFT WING BOT SURF DEPENDENT VARIABLE CP

2Y/BW	.2990	.3640	.4270	.5340	.6730	.7800	.8870	.9720
X/CW								
.400				.3085	.3668		.3347	
.402			.2813					
.503								.0960
.550				.2760	.3035			
.565			-.4626					
.600							.1739	
.637		.2545						
.650						.1998		
.670								.3232
.700					.1564			
.725				.1665				
.750						.5965	.5416	
.760			.1488					
.775				.6798	.5378			
.798		.1738						
.808			.5635					
.834	.1199							
.833		.4569						
.850				.3697	.3306	.3477		
.857			.3594					
.862								.0725
.865	.4696							
.879		.3026						
.900	.2565			.2230			.2209	
.905			.2053					
.919		.1775						
.950				.1231	.1691	.1772		
.953			.1153					
.955		.0923						
.965	.0640							
1.000			-.1546		-.3146		-.5379	

ALPHA (5) = 11.908 BETA (3) = 4.262 MACH = 1.3930 Q = 600.10 P = 441.82 RN/L = 2.9227

SECTION (1)LEFT WING BOT SURF DEPENDENT VARIABLE CP

2Y/BW	.2990	.3640	.4270	.5340	.6730	.7800	.8870	.9720
X/CW								
.010	-.3535	-.4450	-.0074	.5302	.5400	.5788	.5788	
.020	.0000	-.2423	.1701	.4981	.5270	.5480	.5577	-.2051
.040		-.1789	.2858					
.050	-.0439			.4218	.4451	.4618	.5021	
.059								-.0564
.080				.3633				

AMES 11-073(OA148) -140A/B/C ORB LEFT WING BOT (XEBL76)

ALPHA (5) = 11.908 BETA (3) = 4.262

SECTION (1)LEFT WING BOT SURF DEPENDENT VARIABLE CP

2Y/BW	.2930	.3640	.4270	.5340	.6730	.7800	.8870	.9720
X/CW								
.081			.2552					
.086		.0279						
.094	.0169							
.150				.3180	.3727	.4055	.4178	
.157								-.0671
.163		.2349						
.177			.2564					
.229	.0713							
.246		.1981						
.250				.2995	.3394	.3763	.3524	
.274			.2805					
.345								.0768
.390		.2435						
.400				.3005	.3497		.3114	
.402			.2741					
.503								.0652
.550				.2635	.2892			
.565			-.4562					
.600							.1747	
.637		.2480						
.650						.1958		
.670								.3033
.700					.1631			
.725				.1718				
.750						.5939	.5360	
.760			.1948					
.775				.6360	.5294			
.798		.2081						
.808			.5073					
.834	.1168							
.833		.4182						
.850				.3493	.3.12	.3476		
.857			.3343					
.862								.0526
.865	.4312							
.879		.3004						
.900	.2557			.2142			.2044	
.905			.2060					
.919		.1804						
.950				.1181	.1566	.1788		
.953			.1214					
.955		.1099						
.965	.1098							
1.000			-.2258		-.1908		-.4797	

DATE 10 FEB 75 TABULATED PRESSURE DATA - OA148 (AMES 11-073-1) PAGE 3001

AMES 11-073(OA148) -140A/B/C ORB LEFT WING BOT (XEBL76)

ALPHA (6) = 15.905 BETA (1) = -3.830 MACH = 1.3921 Q = 600.28 P = 442.53 RN/L = 2.9208

SECTION (1)LEFT WING BOT SURF DEPENDENT VARIABLE CP

2Y/BW	.2990	.3640	.4270	.5340	.6730	.7800	.8870	.9720
X/CW								
.010	-.2077	-.3248	.2900	.7658	.7787	.8111	.8013	
.020	.0000	-.0482	.4553	.7042	.7438	.7788	.7835	-.0274
.040		.0228	.5203					
.050	.1177			.6122	.6541	.6953	.7154	
.069								.1299
.080				.5451				
.081			.4682					
.085		.2269						
.094	.1779							
.150				.4906	.5641	.6216	5882	
.157								.0030
.163		.4499						
.177			.4360					
.229	.2281							
.246		.3581						
.250				.4580	.5351	.5718	.5147	
.274			.4310					
.345								.2207
.390		.4024						
.400				.4735	.5246		.4616	
.402			.4331					
.503								.2014
.550				.4190	.4205			
.565			-.4774					
.600							.2670	
.637		.3933						
.650						.2838		
.670								.4270
.700					.2426			
.725				.2617				
.750						.7628	.6428	
.760			.3082					
.775				.8386	.6783			
.798		.2962						
.808			.6694					
.834	.2271							
.839		.5570						
.850				.4503	.4054	.4205		
.857			.4377					
.862								.1603
.865	.6155							
.879		.3500						
.900	.3293			.2955			.3067	
.905			.2723					
.919		.2470						

AMES 11-073(OA148) -140A/B/C ORB LEFT WING BOT (XEBL76)

ALPHA (6) = 15.905 BETA (1) = -3.830

SECTION (1)LEFT WING BOT SURF DEPENDENT VARIABLE CP

2Y/BW	.2990	.3640	.4270	.5340	.6730	.7800	.8870	.9720
X/CW								
.950				.1947	.2385	.2469		
.953			.1810					
.955		.1507						
.965	.1312							
1.000			-.1847		-.3399		-.5781	

ALPHA (6) = 15.917 BETA (2) = .190 MACH = 1.3921 Q = 600.28 P = 442.53 RN/L = 2.9208

SECTION (1)LEFT WING BOT SURF DEPENDENT VARIABLE CP

2Y/BW	.2990	.3640	.4270	.5340	.6730	.7800	.8870	.9720
X/CW								
.010	-.3101	-.4035	.0880	.6606	.6872	.6953	.6808	
.020	.0000	-.1594	.2904	.6380	.6809	.7108	.6989	-.1605
.040		-.0877	.4257					
.050	.0452			.5700	.6175	.6389	.6627	
.069								.0145
.080				.5105				
.081			.3927					
.086		.1388						
.094	.1098							
.150				.4614	.5418	.5824	.5512	
.157								-.0458
.163		.3682						
.177			.3975					
.229	.1739							
.246		.3198						
.250				.4354	.5035	.5446	.4825	
.274			.4121					
.345								.1580
.390		.3804						
.400				.4529	.4999		.4279	
.402			.4137					
.503								.1680
.550				.4150	.4077			
.565			-.4864					
.600							.2507	
.637		.3959						
.650						.2679		
.670								.3994
.700					.2480			
.725				.2672				
.750						.7388	.6195	
.760			.3119					

AMES 11-073(OA148) -140A/B/C ORB LEFT WING BOT (XEBL76)

ALPHA (6) = 15.917 BETA (2) = .190

SECTION (1)LEFT WING BOT SURF DEPENDENT VARIABLE CP

2Y/BW	.2990	.3640	.4270	.5340	.6730	.7800	.8870	.9720
X/CW								
.775				.7947	.6543			
.798		.3402						
.808			.6461					
.834	.2258							
.839		.5408						
.850				.4356	.3895	.4137		
.857			.4243					
.862								.1239
.865	.5666							
.879		.3782						
.900	.3431			.2854			.2957	
.905			.2742					
.919		.2514						
.950				.1857	.2265	.2466		
.953			.1843					
.955		.1644						
.965	.1629							
1.000	-		-.3117		-.3453		-.5703	

ALPHA (6) = 15.907 BETA (3) = 4.290 MACH = 1.3921 Q = 600.28 P = 442.53 RN/L = 2.9208

SECTION (1)LEFT WING BOT SURF DEPENDENT VARIABLE CP

2Y/BW	.2990	.3640	.4270	.5340	.6730	.7800	.8870	.9720
X/CW								
.010	-.3833	-.4764	-.0917	.5279	.5778	.5645	.5498	
.020	.0000	-.2479	.1368	.5507	.5925	.6150	.6021	-.2560
.040		-.1769	.3199					
.050	-.0271			.5106	.5585	.5755	.5988	
.069								-.0640
.080				.4679				
.081			.3175					
.086		.0510						
.094	.0520							
.150				.4240	.4904	.5467	.5154	
.157								-.0786
.163		.2998						
.177			.3386					
.223	.1265							
.246		.2706						
.250				.4060	.4729	.5141	.4566	
.274			.3833					
.345								.1189
.390		.3452						

AMES 11-073(OA148) -140A/B/C ORB LEFT WING BOT (XEBL76)

ALPHA (6) = 15.907 BETA (3) = 4.290

SECTION (1)LEFT WING BOT SURF DEPENDENT VARIABLE CP

2Y/BW	.2990	.3640	.4270	.5340	.6730	.7800	.8870	.9720
X/CW								
.400				.4214	.4758		.4049	
.402			.3804					
.503								.1635
.550				.3881	.3895			
.565			-.4572					
.600							.2541	
.637		.3816						
.650						.2668		
.670								.3574
.700					.2963			
.725				.2989				
.750						.7094	.6031	
.760			.3489					
.775				.7449	.6162			
.798		.3374						
.808			.5934					
.834	.2131							
.839		.5059						
.850				.4195	.3734	.4053		
.857			.4104					
.862								.0928
.865	.5359							
.879		.3832						
.900	.3434			.2790			.2685	
.905			.2756					
.919		.2584						
.950				.1848	.2174	.2433		
.953			.1919					
.955		.1814						
.965	.1851							
1.000			-.3057		-.3601		-.5086	

AMES 11-073(OA148) -140A/B/C ORB LEFT WING BOT (XE8L77) (05 AUG 75)

REFERENCE DATA

SREF = 2690.0000 SQ.FT. XMRP = 1076.6800 IN. XO
LREF = 474.8000 IN. YMRP = .0000 IN. YO
BREF = 936.0680 IN. ZMRP = 375.0000 IN. ZO
SCALE = .0300

PARAMETRIC DATA

RUDDER = -10.000 SPDBRK = .000
BDFLAP = -11.700 L-ELVN = 10.000
R-ELVN = -10.000 MACH = 1.250

ALPHA (1) = -4.016 BETA (1) = -3.849 MACH = 1.2454 Q = 599.83 P = 552.28 RN/L = 3.0204

SECTION (1)LEFT WING BOT SURF DEPENDENT VARIABLE CP

2Y/BW	.2990	.3640	.4270	.5340	.6730	.7800	.8870	.9720
X/CW								
.010	-.1516	-.2839	-.1995	-.4080	-.5140	-.3602	-.3274	
.020	.0000	-.2722	-.3088	-.5588	-.5521	-.5707	-.5662	-.6091
.040		-.2614	-.3361					
.050	-.1556			-.5828	-.5806	-.6033	-.5947	
.069								-.6620
.080				-.5437				
.081			-.2368					
.086		-.1440						
.094	-.1512							
.150				-.5044	-.5178	-.5327	-.5446	
.157								-.3873
.163		-.0459						
.177			-.2196					
.229	-.1273							
.246		-.1404						
.250				-.2394	-.4651	-.4809	-.5018	
.274			-.2036					
.345								-.5969
.390		-.1720						
.400				-.2030	-.2648		-.4459	
.402			-.1644					
.503								-.5612
.550				-.1464	-.1769			
.565			-.3718					
.600							-.4220	
.637		-.1124						
.650						-.2431		
.670								-.4570
.700					-.2229			
.725				-.1984				
.750						.1175	-.1625	
.760			-.1938					
.775				.0887	.0166			
.798		-.1782						
.808			.1026					
.834	-.2091							
.839		.0667						
.850				-.0232	-.0286	-.0068		

AMES 11-073(OA148) -140A/B/C ORB LEFT WING BOT (XEBL77)

ALPHA (1) = -4.016 BETA (1) = -3.849

SECTION (1)LEFT WING BOT SURF DEPENDENT VARIABLE CP

2Y/BW	.2990	.3640	.4270	.5340	.6730	.7800	.8870	.9720
X/CW								
.857			.0036					
.862								-.4299
.865	.0828							
.879		-.0227						
.900	-.0813			-.1063			-.1693	
.905			-.1124					
.919		-.1403						
.950				-.1605	-.1178	-.1596		
.953			-.1907					
.955		-.2004						
.965	-.2041							
1.000			-.2165		-.1681		-.1820	

ALPHA (1) = -4.011 BETA (2) = .186 MACH = 1.2454 Q = 599.63 P = 552.28 RN/L = 3.0204

SECTION (1)LEFT WING BOT SURF DEPENDENT VARIABLE CP

2Y/BW	.2990	.3640	.4270	.5340	.6730	.7800	.8870	.9720
X/CW								
.010	-.1014	-.1392	-.0908	-.4102	-.5385	-.4044	-.3850	
.020	.0000	-.1469	-.1505	-.5600	-.5802	-.6037	-.6045	-.6720
.040		-.1373	-.2147					
.050	-.1151			-.5319	-.5989	-.6351	-.6342	
.069								-.6987
.080				-.5033				
.091			-.1970					
.096		-.0690						
.094	-.1187							
.150				-.2907	-.5180	-.5538	-.5780	
.157								-.4023
.163		.0029						
.177			-.1663					
.229	-.0909							
.246		-.0975						
.250				-.1896	-.4093	-.5006	-.5350	
.274			-.1486					
.345								-.6330
.390		-.1138						
.400				-.1484	-.1718		-.4714	
.402			-.1196					
.503								-.6234
.550				-.1157	-.1398			
.565			-.4126					
.600							-.3260	

AMES 11-073(OA148) -140A/B/C ORB LEFT WING BOT (XEBL77)

ALPHA (1) = -4.011 BETA (2) = .186

SECTION (1)LEFT WING BOT SURF DEPENDENT VARIABLE CP

2Y/BW	.2990	.3640	.4270	.5340	.6730	.7800	.8870	.9720
X/CW								
.637		-.0927						
.650						-.1962		
.670								-.4712
.700					-.2013			
.725				-.1900				
.750						.1429	.1191	
.760			-.1917					
.775				.1153	.0333			
.798		-.1711						
.808			.1078					
.834	-.2062							
.839		.0614						
.850				-.0152	-.0428	.0054		
.857			.0000					
.862								-.3589
.865	.0573							
.879		-.0366						
.900	-.0995			-.1231			-.0714	
.905			-.1160					
.919		-.1508						
.950				-.1763	-.1171	-.1322		
.953			-.2070					
.955		-.2027						
.965	-.2081							
1.000			-.2631		-.2301		-.1400	

ALPHA (1) = -4.020 BETA (3) = 4.275 MACH = 1.2454 Q = 599.63 P = 552.28 RN/L = 3.0204

SECTION (1)LEFT WING BOT SURF DEPENDENT VARIABLE CP

2Y/BW	.2990	.3640	.4270	.5340	.6730	.7800	.8870	.9720
X/CW								
.010	-.0968	-.0520	.0151	-.4045	-.5556	-.4365	-.4256	
.020	.0000	-.0659	.0029	-.5432	-.5915	-.6234	-.6282	-.7022
.040		-.0544	-.1015					
.050	-.1065			-.4652	-.6035	-.6481	-.6539	
.059								-.6742
.080				-.3891				
.091			-.1159					
.096		-.0055						
.094	-.1003							
.150				-.2139	-.4843	-.5560	-.5826	
.157								-.3931
.163		.0582						

AMES 11-073(OA148) -140A/B/C ORB LEFT WING BOT (XEBL77)

ALPHA (1) = -4.020 BETA (3) = 4.275

SECTION (1)LEFT WING BOT SURF DEPENDENT VARIABLE CP

2Y/BW	.2990	.3640	.4270	.5340	.6730	.7800	.8870	.9720
X/CW								
.177			-.1118					
.229	-.0653							
.246		-.0477						
.250				-.1469	-.1887	-.4314	-.5427	
.274			-.0922					
.345								-.6165
.390		-.0637						
.400				-.1083	-.1335		-.3693	
.402			-.0871					
.503								-.5551
.550				-.0969	-.1146			
.565			-.3724					
.600							-.1693	
.637		-.0812						
.650						-.1822		
.670								-.0218
.700					-.1872			
.725				-.1842				
.750						.1382	.1516	
.760			-.1781					
.775				.1183	.0578			
.798		-.1408						
.808			.1071					
.834	-.2094							
.839		.0345						
.850				-.0026	-.0472	.0020		
.857			-.0129					
.862								-.1098
.865	.0841							
.879		-.0483						
.900	-.1058			-.1250			-.0671	
.905			-.1231					
.919		-.1544						
.950				-.1962	-.1333	-.1191		
.953			-.2081					
.955		-.1978						
.965	-.2075							
1.000			-.2773		-.2712		-.1321	

AMES 11-073(OA148) -140A/B/C ORB LEFT WING BOT (XEBL77)

ALPHA (2) = .012 BETA (1) = -3.863 MACH = 1.2451 Q = 599.58 P = 552.51 RN/L = 3.0183

SECTION (1)LEFT WING BOT SURF DEPENDENT VARIABLE CP

2Y/BW	.2990	.3640	.4270	.5340	.6730	.7800	.8870	.9720
X/CW								
.010	.0018	.0071	.2150	-.1854	-.2999	-.2223	-.1328	
.020	.0000	-.0230	.1767	-.3311	-.3560	-.3668	-.3975	-.3272
.040		-.0194	-.0096					
.050	-.0383			-.2438	-.3392	-.3842	-.4085	
.069								
.080				-.2180				-.3626
.081			-.0493					
.086		.0272						
.094	-.0626							
.150				-.1502	-.2308	-.2782	-.3224	
.157								
.163		.0994						-.2349
.177			-.0673					
.229	-.0606							
.246		-.0326						
.250				-.0939	-.0960	-.2034	-.2687	
.274			-.0708					
.345								
.390		-.0517						-.2233
.400				-.0670	-.0727		-.1248	
.402			-.0543					
.503								-.1493
.550				-.0376	-.0512			
.565			-.4339					
.600							-.1279	
.637		-.0271						
.650						-.1175		
.670								
.700					-.1348			.0051
.725				-.1179				
.750								
.760			-.1302			.2616	.2152	
.775				.2431	.1617			
.798		-.1319						
.808			.2286					
.834	-.1542							
.839		.1896						
.850				.0810	.0736	.0647		
.857			.1023					
.862								
.865	.2134							-.1285
.879		.0456						
.900	-.0090			-.0177			-.0275	
.905			-.0364					
.919		-.0734						

AMES 11-073(OA148) -140A/B/C ORB LEFT WING BOT (XEBL77)

ALPHA (2) = .012 BETA (1) = -3.863

SECTION (1)LEFT WING BOT SURF DEPENDENT VARIABLE CP

2Y/BW	.2990	.3640	.4270	.5340	.6730	.7800	.8870	.9720
X/CW								
.950				-.0877	-.0538	-.0916		
.953			-.1168					
.955		-.1447						
.965	-.1480							
1.000			-.1381		-.0957		-.3542	

ALPHA (2) = .014 BETA (2) = .176 MACH = 1.2451 Q = 599.58 P = 552.51 RN/L = 3.0183

SECTION (1)LEFT WING BOT SURF DEPENDENT VARIABLE CP

2Y/BW	.2990	.3540	.4270	.5340	.6730	.7800	.8870	.9720
X/CW								
.010	-.0410	.0013	.2647	-.1711	-.3184	-.2645	-.1868	
.020	.0000	-.0082	.2263	-.1977	-.3036	-.3893	-.4330	-.3368
.040		.0030	.0488					
.050	-.0514			-.1786	-.2933	-.3756	-.4299	
.069								-.3282
.090				-.1493				
.081			-.0090					
.086		.0464						
.094	-.0685							
.150				-.1044	-.1543	-.2451	-.3306	
.157								-.2202
.163		.1180						
.177			-.0360					
.229	-.0529							
.246		-.0078						
.250				-.0583	-.0869	-.0850	-.1224	
.274			-.0250					
.345								-.0991
.390		-.0058						
.400				-.0300	-.0279		-.0874	
.402			-.0207					
.503								-.1552
.550				-.0157	-.0276			
.565			-.4723					
.600							-.1070	
.637		-.0058						
.650						-.1004		
.670								.0422
.700					-.1217			
.725				-.1120				
.750						.2656	.2223	
.760			-.1247					

AMES 11-073(OA148) -140A/B/C ORB LEFT WING BOT (XEBL77)

ALPHA (2) = .014 BETA (2) = .176

SECTION (1)LEFT WING BOT SURF DEPENDENT VARIABLE CP

2Y/BW	.2990	.3640	.4270	.5340	.6730	.7800	.8870	.9720
X/CW								
.775				.2563	.1655			
.798		-.1249						
.808			.2359					
.834	-.1519							
.879		.1784						
.850				.0818	.0662	.0681		
.857			.0981					
.862								-.1398
.865	.1710							
.879		.0476						
.900	-.0164			-.0277			-.0190	
.905			-.0468					
.919		-.0804						
.950				-.1033	-.0456	-.0761		
.953			-.1357					
.955		-.1482						
.955	-.1598							
1.000			-.1621		-.1265		-.3143	

ALPHA (2) = .026 BETA (3) = 4.255 MACH = 1.2451 Q = 599.58 P = 552.51 RN/L = 3.0183

SECTION (1)LEFT WING BOT SURF DEPENDENT VARIABLE CP

2Y/BW	.2990	.3640	.4270	.5340	.6730	.7800	.8870	.9720
X/CW								
.010	-.1257	-.0630	.2946	-.0566	-.2772	-.2752	-.2049	
.020	.0000	-.0343	.2656	-.0633	-.1901	-.3578	-.4306	-.1921
.040		-.0190	.1213					
.050	-.0891			-.1110	- 2318	-.2813	-.3555	
.069								-.1859
.090				-.0784				
.081			.0459					
.086		.0483						
.094	-.0929							
.150				-.0626	-.0903	-.1015	-.1161	
.157								-.1425
.163		.1376						
.177			.0002					
.229	-.0560							
.245		.0282						
.250				-.0203	-.0481	-.0559	-.0919	
.274			.0121					
.345								-.0910
.390		.0215						

AMES 11-073(OA148) -140A/B/C ORB LEFT WING BOT (XEBL77)

ALPHA (2) = .026 BETA (3) = 4.255

SECTION (1)LEFT WING BOT SURF DEPENDENT VARIABLE CP

2Y/BW	.2990	.3640	.4270	.5340	.6730	.7800	.8870	.9720
X/CW								
.400				.0005	.0104		-.0591	
.402			.0078					
.503								-.1290
.550				-.0055	-.0103			
.565			-.4160					
.600							-.0970	
.637		-.0001						
.650						-.0912		
.670								.0547
.700					-.1133			
.725				-.1095				
.750						.2576	.2225	
.760			-.1190					
.775				.2660	.1695			
.799		-.0852						
.808			.2352					
.834	-.1329							
.839		.1445						
.850				.0878	.0569	.0681		
.857			.0825					
.862								-.1595
.865	.1561							
.879		.0354						
.900	-.0229			-.0431			-.0251	
.905			-.0529					
.919		-.0819						
.950				-.1223	-.0582	-.0758		
.953			-.1446					
.955		-.1334						
.965	-.1518							
1.000			-.1650		-.1666		-.2863	

ALPHA (3) = 3.987 BETA (1) = -3.868 MACH = 1.2451 Q = 599.58 P = 552.51 RN/L = 3.0187

SECTION (1)LEFT WING BOT SURF DEPENDENT VARIABLE CP

2Y/BW	.2990	.3640	.4270	.5340	.6730	.7800	.8870	.9720
X/CW								
.010	.0369	-.0516	.4417	.2462	.1321	.1464	.1723	
.020	.0000	-.0044	.3999	.1359	.1162	.0585	.0087	.0762
.040		.0193	.2232					
.050	.0353			.0530	.0075	.0367	.0221	
.069								.0329
.080				.0521				

DATE 10 FEB 75 TABULATED PRESSURE DATA - OA148 (AMES 11-073-1) PAGE 3013

AMES 11-073(OA148) -140A/B/C ORB LEFT WING BOT (XEBL77)

ALPHA (3) = 3.937 BETA (1) = -3.868

SECTION (1)LEFT WING BOT SURF DEPENDENT VARIABLE CP

2Y/BW	.2990	.3640	.4270	.5340	.6730	.7800	.8870	.9720
X/CW								
.081			.1339					
.086		.1033						
.094	.0104							
.150				.0341	.0568	.0774	.0861	
.157								-.0778
.163		.2141						
.177			.0789					
.229	-.0078							
.246		.0770						
.250				.0729	.0679	.0820	.0413	
.274			.0753					
.345								
.390		.0662						.0156
.400								
.402				.0767	.0973		.0518	
.503			.0679					
.560								-.0365
.565				.0717	.0839			
.600			-.4666					
.637		.0676					-.0112	
.650								
.670						-.0071		
.700								.1634
.725					-.0462			
.750				-.0319				
.760			-.0439			.4298	.3523	
.775								
.799		-.0444		.4468	.3290			
.808								
.834	-.0706		.3740					
.839		.3010						
.850								
.857				.1901	.1579	.1378		
.862			.1945					
.865	.3448							-.0742
.879		.1093						
.900	.0719							
.905				.0580			.0487	
.919			.0324					
.950		-.0029						
.953				-.0346	.0067	-.0239		
.955			-.0568					
.955		-.0851						
.955	-.1055							
1.000			-.0851		-.1497		-.4584	

AMES 11-073(OA148) -140A/B/C ORB LEFT WING BOT (XEBL77)

ALPHA (3) = 3.988 BETA (2) = .182 MACH = 1.2451 Q = 599.58 P = 552.51 RN/L = 3.0187

SECTION (1)LEFT WING BOT SURF DEPENDENT VARIABLE CP

2Y/BW	.2990	.3640	.4270	.5340	.6730	.7800	.8870	.9720
X/CW								
.010	-.0930	-.2389	.3707	.2924	.1669	.1646	.1951	
.020	.0000	-.1157	.3733	.1821	.1466	.0987	.0577	.0241
.040		-.0750	.2508					
.050	-.0214			.1179	.0412	.0721	.0604	
.069								.0035
.080				.1023				
.081			.1551					
.095		.0650						
.094	-.0201							
.150				.0640	.0959	.0982	.0855	
.157								-.0925
.163		.2054						
.177			.1024					
.229	-.0304							
.246		.0873						
.250				.0906	.0793	.0896	.0450	
.274			.0981					
.345								-.0059
.390		.0889						
.400				.0995	.1148		.0714	
.402			.0885					
.503								-.0511
.550				.0925	.1021			
.565			-.5278					
.600							-.0143	
.637		.0890						
.650						-.0046		
.670								.1597
.700					-.0447			
.725				-.0251				
.750						.4176	.3454	
.760			-.0391					
.775				.4486	.3365			
.798		-.0292						
.809			.3729					
.834	-.0599							
.839		.2830						
.850				.1888	.1530	.1548		
.857			.1791					
.862								-.0910
.885	.2894							
.879		.1244						
.900	.0717			.0493			.0488	
.905			.0218					
.919		-.0050						

AMES 11-073(OA148) -140A/B/C ORB LEFT WING BOT (XE8L77)

ALPHA (3) = 3.988 BETA (2) = .182

SECTION (1)LEFT WING BOT SURF DEPENDENT VARIABLE CP

2Y/BW	.2990	.3640	.4270	.5340	.6730	.7800	.8870	.9720
X/CW								
.950				-.0455	.0045	-.0147		
.953			-.0688					
.955		-.0836						
.965	-.1009							
1.000			-.1122		-.1520		-.4314	

ALPHA (3) = 3.988 BETA (3) = 4.246 MACH = 1.2451 Q = 539.58 P = 552.51 RN/L = 3.0187

SECTION (1)LEFT WING BOT SURF DEPENDENT VARIABLE CP

2Y/BW	.2990	.3640	.4270	.5340	.6730	.7800	.8870	.9720
X/CW								
.010	-.2582	-.3625	.2762	.3460	.2089	.2355	.2530	
.020	.0000	-.2149	.3230	.2423	.1791	.1724	.1301	-.0469
.040		-.1662	.2606					
.050	-.0991			.1709	.0924	.1151	.1272	
.069								-.0325
.080				.1397				
.081			.1715					
.086		.0116						
.094	-.0795							
.150				.1026	.1244	.1189	.1124	
.157								-.1047
.163		.1856						
.177			.1120					
.229	-.0649							
.246		.0965						
.250				.1119	.1043	.1139	.0781	
.274			.1219					
.345								-.0420
.390		.1159						
.400				.1246	.1479		.0913	
.402			.1173					
.503								-.0854
.550				.0995	.1004			
.565			-.4694					
.600							-.0245	
.637		.0946						
.650						-.0003		
.670								.1419
.700					-.0438			
.725				-.0244				
.750						.3981	.3343	
.760			-.0210					

AMES 11-073(OA148) -140A/B/C ORB LEFT WING BOT (XEBL77)

ALPHA (3) = 3.980 BETA (3) = 4.246

SECTION (1)LEFT WING BOT SURF DEPENDENT VARIABLE CP

2Y/BW	.2990	.3640	.4270	.5340	.6730	.7800	.8870	.9720
X/CW								
.775				.4605	.3283			
.798		.0232						
.808			.3428					
.834	-.0462							
.839		.2436						
.850				.1741	.1417	.1597		
.857			.1597					
.862								-.1178
.865	.2564							
.879		.1185						
.900	.0689			.0325			.0349	
.905			.0191					
.919		-.0071						
.950				-.0628	-.0042	-.0198		
.953			-.0677					
.955		-.0732						
.965	-.0819							
1.000			-.1652		-.1601		-.4045	

ALPHA (4) = 7.974 BETA (1) = -3.859 MACH = 1.2449 Q = 599.64 P = 552.75 RN/L = 3.0238

SECTION (1)LEFT WING BOT SURF DEPENDENT VARIABLE CP

2Y/BW	.2990	.3640	.4270	.5340	.6730	.7800	.8870	.9720
X/CW								
.010	-.0353	-.2431	.4026	.5497	.4923	.5726	.5866	
.020	.0000	-.0506	.4567	.4123	.4311	.4515	.4680	.0827
.040		-.0144	.3784					
.050	.0667			.3147	.3183	.3473	.3831	
.069								.1254
.080				.2579				
.081			.2795					
.086		.1302						
.094	.0508							
.150				.2223	.2790	.3053	.2957	
.157								-.0328
.163		.2969						
.177			.2057					
.229	.0598							
.246		.1771						
.250				.2253	.2370	.2785	.2387	
.274			.2083					
.345								.0785
.390		.1858						

AMES 11-073(OA148) -140A/B/C ORB LEFT WING BOT (XEBL77)

ALPHA (4) = 7.974 BETA (1) = -3.859

SECTION (1)LEFT WING BOT SURF DEPENDENT VARIABLE CP

2Y/BW	.2990	.3640	.4270	.5340	.6730	.7800	.8870	.9720
X/CW								
.400				.2224	.2957		.2236	
.402			.1995					
.503								.0398
.550				.2026	.1896			
.565			-.5237					
.600							.0628	
.637		.1750						
.650						.0738		
.670								.2601
.700					.0300			
.725				.0530				
.750						.5538	.4510	
.760			.0850					
.775				.6273	.4853			
.799		.0869						
.808			.4915					
.834	.032							
.839		.4009						
.850				.2702	.2272	.2241		
.857			.2634					
.862								-.0108
.865	.4439							
.879		.1832						
.900	.1473			.1153			.1117	
.905			.0898					
.919		.0608						
.950				.0122	.0597	.0470		
.953			-.0034					
.955		-.0326						
.965	-.0480							
1.000			-.1335		-.2377		-.5648	

ALPHA (4) = 7.979 BETA (2) = .184 MACH = 1.2449 Q = 599.64 P = 552.75 RN/L = 3.0238

SECTION (1)LEFT WING BOT SURF DEPENDENT VARIABLE CP

2Y/BW	.2990	.3640	.4270	.5340	.6730	.7800	.8870	.9720
X/CW								
.010	-.2251	-.4722	.2201	.5583	.5119	.5666	.5743	
.020	.0000	-.2057	.3354	.4519	.4543	.4619	.4780	-.0497
.040		-.1444	.3316					
.050	-.0214			.3520	.3489	.3633	.4012	
.069								.0165
.080				.2899				

AMES 11-073(OA148) -140A/B/C ORB LEFT WING BOT (XEBL77)

ALPHA (4) = 7.979 BETA (2) = .184

SECTION (1)LEFT WING BOT SURF DEPENDENT VARIABLE CP

2Y/BW	.2990	.3640	.4270	.5340	.6730	.7800	.8870	.9720
X/CW								
.081			.2656					
.086		.0413						
.094	.0053							
.150				.2499	.2891	.3161	.3059	
.157								-.0644
.163		.2435						
.177			.2151					
.229	.0260							
.245		.1661						
.250				.2373	.2567	.2916	.2406	
.274			.2191					
.345								.0309
.390		.2006						
.400				.2457	.2965		.2157	
.402			.2237					
.503								-.0001
.550				.2160	.2027			
.565			-.5402					
.600							.0515	
.637		.1959						
.650						.0755		
.670								.2293
.700					.0364			
.725				.0623				
.750						.5422	.4350	
.760			.1192					
.775				.6225	.4791			
.798		.1388						
.808			.4747					
.814	.0593							
.839		.3725						
.850				.2606	.2197	.2292		
.857			.2513					
.862								-.0370
.855	.4011							
.879		.2004						
.900	.1607			.1067			.1060	
.905			.0964					
.919		.0679						
.950				.0042	.0549	.0515		
.953			.0015					
.955		-.0167						
.965	-.0244							
1.000			-.1768		-.16 2		-.5573	

DATE 10 FEB 76 TABULATED PRESSURE DATA - OA148 (AMES 11-073-1) PAGE 3019

AMES 11-073(OA148) -140A/B/C ORB LEFT WING BOT (XEBL77)

ALPHA (4) = 7.978 BETA (3) = 4.242 MACH = 1.2449 Q = 599.64 P = 552.75 RN/L = 3.0238

SECTION (1)LEFT WING BOT SURF DEPENDENT VARIABLE CP

2Y/BW	.2990	.3640	.4270	.5340	.6730	.7800	.8870	.9720
X/CW								
.010	-.4070	-.5318	.0542	.5165	.4843	.5306	.5363	
.020	.0000	-.3125	.1944	.4356	.4430	.4574	.4728	-.2073
.040		-.2432	.2588					
.050	-.1109							
.069				.3527	.3499	.3649	.3991	
.080								-.0951
.081				.2924				
.086			.2099					
.094		-.0358						
.150	-.0630							
.157				.2503	.2928	.3296	.3060	
.163								-.1051
.177		.1838						
.229			.2080					
.246	-.0194							
.250		.1313						
.274				.2375	.2782	.3016	.2352	
.345			.2243					
.390								-.0253
.400		.1969						
.402				.2536	.2899		.2081	
.503			.2363					
.550								-.0491
.565				.2056	.1990			
.600			-.4887					
.637		.1900					.0359	
.650								
.670						.0635		
.700								.1990
.725					.0371			
.750				.0762				
.760						.5308	.4329	
.775			.1649					
.798				.5825	.4604			
.809		.1663						
.834			.4291					
.839	.0539							
.850		.3386						
.857				.2445	.2038	.2289		
.862			.2327					
.865	.3634							-.0673
.879		.2006						
.900	.1618							
.905				.0961				
.919			.0904				.0930	
		.0659						

AMES 11-073(OA148) -140A/B/C ORB LEFT WING BOT (XEBL77)

ALPHA (4) = 7.978 BETA (3) = 4.242

SECTION (1)LEFT WING BOT SURF DEPENDENT VARIABLE CP

2Y/BW	.2990	.3640	.4270	.5340	.6730	.7800	.8870	.9720
X/CW								
.950				-.0040	.0472	.0539		
.953			-.0002					
.955		-.0050						
.965	-.0067							
1.000			-.1480		-.1488		-.5674	

ALPHA (5) = 11.961 BETA (1) = -3.847 MACH = 1.2454 Q = 599.63 P = 552.28 RN/L = 3.0229

SECTION (1)LEFT WING BOT SURF DEPENDENT VARIABLE CP

2Y/BW	.2990	.3640	.4270	.5340	.6730	.7800	.8870	.9720
X/CW								
.010	-.1806	-.4101	.2962	.7046	.7047	.7566	.7397	
.020	.0000	-.1081	.4484	.6134	.6526	.5851	.6842	-.0399
.040		-.0390	.4709					
.050	.0717			.5084	.5532	.5821	.5980	
.069								.0758
.080				.4452				
.081			.4065					
.086		.1602						
.094	.1050							
.150				.4029	.4699	.5028	.4556	
.157								-.0289
.163		.3828						
.177			.3524					
.229	.1393							
.246		.2836						
.250				.3843	.4310	.4449	.3844	
.274			.3498					
.345								.1204
.390		.3288						
.400				.3807	.4049		.3343	
.402			.3716					
.503								.1067
.550				.3080	.3035			
.565			-.5545					
.600							.1309	
.637		.2924						
.650						.1520		
.670								.3218
.700					.1367			
.725				.2154				
.750						.6645	.5198	
.760			.3209					

AMES 11-073(OA148) -140A/B/C ORB LEFT WING BOT (XEBL77)

ALPHA (5) = 11.961 BETA (1) = -3.847

SECTION (1)LEFT WING BOT SURF DEPENDENT VARIABLE CP

2Y/BW	.2990	.3640	.4270	.5340	.6730	.7800	.8870	.9720
X/CW								
.775				.7339	.5801			
.798		.3191						
.808			.5700					
.834	.1826							
.839		.4675						
.850				.3250	.2817	.2902		
.857			.3201					
.862								
.865	.5439							.0382
.879		.2572						
.900	.2180			.1636			.1695	
.905			.1488					
919		.1230						
.950				.0617	.1096	.1^98		
.953			.0550					
.955		.0222						
.965	.0066							
1.000			-.0436		-.2996		-.6475	

ALPHA (5) = 11.970 BETA (2) = .192 MACH = 1.2454 Q = 599.63 P = 552.28 RN/L = 3.0229

SECTION (1)LEFT WING BOT SURF DEPENDENT VARIABLE CP

2Y/BW	.2990	.3640	.4270	.5340	.6730	.7800	.8870	.9720
X/CW								
.010	-.3591	-.5015	.1025	.6324	.6506	.6729	.6517	
.020	.0000	-.2241	.2887	.5771	.6272	.6491	.6323	-.2028
.040		-.1505	.3814					
.050	-.0136			.4996	.5420	.5681	.5722	
.069								
.080								-.0423
.081				.4397				
.086			.3486					
.094		.0711						
.150	.0423							
.157				.3945	.4702	.4919	.4423	
.163								-.0708
.177		.3126						
.229			.3397					
.246	.0908							
.250		.2364						
.274				.3924	.4273	.4409	.3694	
.345			.3553					
.390								.0560
		.3289						

AMES 11-073(OA148) -140A/B/C ORB LEFT WING BOT (XEBL77)

ALPHA (5) = 11.970 BETA (2) = .192

SECTION (1)LEFT WING BOT SURF DEPENDENT VARIABLE CP

2Y/BW	.2990	.3640	.4270	.5340	.6730	.7800	.8870	.9720
X/CW								
.400				.3758	.3990		.3134	
.402			.3778					
.503								.0844
.550				.3054	.2974			
.565			-.5905					
.600							.1227	
.637		.2901						
.650						.1476		
.670								.2814
.700					.2159			
.725				.2538				
.750						.6412	.5041	
.760			.3203					
.775				.7123	.5570			
.798		.3140						
.809			.5473					
.834	.1743							
.839		.4472						
.850				.3169	.2682	.2852		
.857			.3084					
.862								-.0033
.865	.4979							
.879		.2686						
.900	.2340			.1605			.1656	
.905			.1504					
.919		.1282						
.950				.0582	.0985	.1100		
.953			.0529					
.955		.0390						
.965	.0303							
1.000			-.1589		-.2027		-.6108	

ALPHA (5) = 11.962 BETA (3) = 4.260 MACH = 1.2454 Q = 599.63 P = 552.28 RN/L = 3.0229

SECTION (1)LEFT WING BOT SURF DEPENDENT VARIABLE CP

2Y/BW	.2990	.3640	.4270	.5340	.6730	.7800	.8870	.9720
X/CW								
.010	-.4740	-.5534	-.0995	.5247	.5642	.5629	.5428	
.020	.0000	-.3304	.1235	.5156	.5701	.5948	.5649	-.3300
.040		-.2548	.2870					
.050	-.1025			.4641	.5212	.5368	.5308	
.069								-.1502
.080				.4186				

AMES 11-073(OA148) -140A/B/C ORB LEFT WING BOT (XEBL77)

ALPHA (5) = 11.962 BETA (3) = 4.260

SECTION (1)LEFT WING BOT SURF DEPENDENT VARIABLE CP

2Y/BW	.2990	.3640	.4270	.5340	.6730	.7800	.8870	.9720
X/CW								
.081			.2611					
.086		-.0125						
.094	-.0315							
.150				.3799	.4560	.4720	.4207	
.157								-.1212
.163		.2351						
.177			.3095					
.229	.0409							
.246		.1999						
.250				.3783	.4121	.4212	.3521	
.274			.3500					
.345								.0101
.390		.3311						
.400				.3584	.3790		.2885	
.402			.3603					
.503								.1561
.550				.2928	.2819			
.565			-.5143					
.600							.1656	
.637		.2782						
.650						.1785		
.670								.2459
.700					.2776			
.725				.2851				
.750						.5972	.4752	
.760			.3150					
.775				.6564	.5162			
.798		.2987						
.808			.5024					
.834	.1590							
.839		.4180						
.850				.2992	.2452	.2703		
.857			.2970					
.862								-.0388
.865	.4695							
.879		.2723						
.900	.2401			.1501			.1423	
.905			.1506					
.919		.1312						
.950				.0480	.0869	.1049		
.953			.0603					
.955		.0521						
.965	.0533							
1.000			-.2594		-.1323		-.5818	

AMES 11-073(OA148) -140A/B/C ORB LEFT WING BOT (XE8L78) (05 AUG 75)

REFERENCE DATA

SPEF = 2690.0000 SQ.FT. XMRP = 1076.6800 IN. XO
LPEF = 474.8000 IN. YMRP = .0000 IN. YO
BREF = 936.0680 IN. ZMRP = 375.0000 IN. ZO
SCALE = .0300

PARAMETRIC DATA

RUDDER = -10.000 SPDBRK = .000
BDFLAP = -11.700 L-ELVN = 10.000
R-ELVN = -10.000 MACH = 1.100

ALPHA (1) = -4.062 BETA (1) = -3.838 MACH = 1.0993 Q = 599.81 P = 709.06 RN/L = 3.1886

SECTION (1)LEFT WING BOT SURF DEPENDENT VARIABLE CP

2Y/BW	.2990	.3640	.4270	.5340	.6730	.7800	.8870	.9720
X/CW								
.010	-.1791	-.3399	-.2996	-.6233	-.7451	-.5628	-.5505	
.020	.0000	-.3163	-.3763	-.7807	-.7886	-.8083	-.8142	-.8463
.040		-.2967	-.4122					
.050	-.1835			-.7265	-.8085	-.8430	-.8418	
.069								-.9291
.080				-.7050				
.081			-.2939					
.085		-.1435						
.094	-.1882							
.150				-.4798	-.7041	-.7373	-.7699	
.157								-.5054
.163		-.0666						
.177			-.2453					
.229	-.1529							
.245		-.1339						
.250				-.2763	-.5866	-.6720	-.7041	
.274			-.1937					
.345								-.8449
.390		-.1514						
.400				-.1597	-.1683		-.6249	
.402			-.1282					
.503								-.7804
.550				-.1238	-.1528			
.565			-.4354					
.600							-.2768	
.637		-.1067						
.650						-.1803		
.670								-.5227
.700					-.1925			
.725				-.2474				
.750						.3341	.2195	
.760			-.1337					
.775				.2219	.1668			
.799		-.1301						
.808			.1912					
.834	-.2023							
.839		.1035						
.850				.0406	.0356	.0106		

AMES 11-073(OA148) -140A/B/C ORB LEFT WING BOT (XEBL78)

ALPHA (1) = -4.062 BETA (1) = -3.838

SECTION (1)LEFT WING BOT SURF DEPENDENT VARIABLE CP

2Y/BW	.2990	.3640	.4270	.5340	.6730	.7800	.8870	.9720
X/CW								
.857			.0248					
.862								
.865	.1484							-.3145
.879		-.0084						
.900	-.0987			-.0943			-.0932	
.905			-.1279					
.919		-.1731						
.950				-.1906	-.1415	-.1671		
.953			-.2264					
.955		-.2351						
.965	-.2671							
1.000			-.0388		-.0661		-.0070	

ALPHA (1) = -4.058 BETA (2) = .195 MACH = 1.0993 Q = 599.81 P = 709.08 RN/L = 3.1886

SECTION (1)LEFT WING BOT SURF DEPENDENT VARIABLE CP

2Y/BW	.2990	.3640	.4270	.5340	.6730	.7800	.8870	.9720
X/CW								
.010	-.1365	-.1685	-.1254	-.6212	-.7726	-.6084	-.6177	
.020	.0000	-.1687	-.1469	-.7757	-.8174	-.8449	-.8610	-.9093
.040		-.1522	-.2573					
.050	-.1311			-.6874	-.8234	-.8758	-.8886	
.069								-.8659
.080				-.6489				
.081			-.1859					
.086		-.0438						
.094	-.1368							
.150				-.2812	-.6935	-.7683	-.7986	
.157								-.5035
.163		.0273						
.177			-.1809					
.229	-.1107							
.246		-.0814						
.250				-.1888	-.2322	-.6016	-.7390	
[illegible]			-.1402					
.345								
[illegible]		-.1[illegible]						-.7723
[illegible]				-.1183	-.1230		-.4061	
.402			-.1009					
[illegible]								-.5940
[illegible]				-.1212	-.1428			
.565			-.5407					
.600							-.1124	

AMES 11-073(OA148) -140A/B/C ORB LEFT WING BOT (XE8L78)

ALPHA (1) = -4.058 BETA (2) = .195

SECTION (1)LEFT WING BOT SURF DEPENDENT VARIABLE CP

2Y/BW	.2990	.3540	.4270	.5340	.6730	.7800	.8870	.9720
X/CW								
.637		-.1139						
.650						-.1860		
.670								-.3951
.700					-.2171			
.725				-.2370				
.750						.2743	.2107	
.760			-.1213					
.775				.2540	.1561			
.794		-.1269						
.809			.1882					
.835	-.1605							
.879		.1144						
.890				.0368	.0212	-.0032		
.907			.0142					
.942								-.1441
.951	.1052							
.979		-.0330						
.990	-.1006			-.1030			-.1352	
.994			-.1388					
1.019		-.1833						
.980				-.2035	-.1512	-.1730		
.983			-.2345					
.985		-.2391						
.986	-.2712							
1.000			-.1443		-.1891		-.0612	

ALPHA (1) = -4.055 BETA (3) = 4.277 MACH = 1.0993 Q = 599.81 P = 709.06 RN/L = 3.1886

SECTION (1)LEFT WING BOT SURF DEPENDENT VARIABLE CP

2Y/BW	.2990	.3640	.4270	.5340	.6730	.7800	.8870	.9720
X/CW								
.010	-.1199	-.0632	.0383	-.5957	-.7871	-.6429	-.6631	
.020	.0000	-.0556	.0125	-.7228	-.8265	-.8684	-.8855	-.7987
.040		-.0355	-.1041					
.050	-.1007			-.5979	-.7501	-.8490	-.8478	
.069								-.7213
.080				-.2324				
.091			-.0756					
.046		.0516						
.094	-.0993							
.150				-.2224	-.3270	-.6346	-.8037	
.157								-.3869
.163		.1220						

AMES 11-073(OA148) -140A/B/C ORB LEFT WING BOT (XEBL78)

ALPHA (1) = -4.055 BETA (3) = 4.277

SECTION (1) LEFT WING BOT SURF DEPENDENT VARIABLE CP

2Y/BW	.2990	.3640	.4270	.5340	.6730	.7000	.8870	.9720
X/CW								
.177			-.1048					
.229	-.0648							
.246		.0081						
.250				-.1390	-.1942	-.2792	-.4909	
.274			-.0725					
.345								-.4971
.390		-.0369						
.400				-.1071	-.1175		-.2314	
.402			-.0830					
.503								-.4106
.550				-.1294	-.1520			
.565			-.4143					
.600							-.1626	
.637		-.1051						
.650						-.1947		
.670								-.1220
.700					-.2330			
.725				-.2244				
.750						.2441	.1565	
.760			-.1549					
.775				.2348	.12[illegible]			
.799		-.1085						
.808			.1549					
.834	-.1766							
.839		.0625						
.850				.0076	-.0089	-.0182		
.857			-.0211					
.862								-.1889
.865	.0846							
.879		-.0701						
.900	-.1254			-.1338			-.1544	
.905			-.1702					
.919		-.2078						
.940				-.2328	-.1765	-.1887		
.943			-.2578					
.955		-.2533						
.965	-.2818							
1.000			-.2497		-.3045		-.1187	

AMES 11-073(OA148) -140A/B/C ORB LEFT WING BOT (XE8L78)

ALPHA (2) = .040 BETA (1) = -3.863 MACH = 1.0990 Q = 599.71 P = 709.30 RN/L = 3.1896

SECTION (1)LEFT WING BOT SURF DEPENDENT VARIABLE CP

2Y/BW	.2990	.3640	.4270	.5340	.6730	.7800	.8870	.9720
X/CW								
.010	-.0465	-.0107	.2165	-.3339	-.4714	-.3997	-.3116	
.020	.0000	-.0368	.1345	-.4830	-.5572	-.5636	-.6023	-.4159
.040		-.0251	-.0598					
.050	-.0877			-.3186	-.4668	-.5595	-.6020	
.069								-.4131
.080				-.2585				
.081			-.0662					
.085		.0254						
.094	-.1013							
.150				-.1781	-.2111	-.3729	-.4633	
.157								-.2159
.163		.0907						
.177			-.0870					
.229	-.0750							
.240		-.0284						
.250				-.0612	-.0939	-.0937	-.0767	
.274			-.0409					
.345								-.0832
.300		-.0085						
.400				.0036	.0172		-.0204	
.402			.0084					
.503								-.1594
.550				.0002	-.0376			
.565			-.5145					
.600							-.1327	
.637		.0043						
.650						-.1087		
.670								.0530
.700					-.1420			
.725				-.1287				
.750						.4016	.2602	
.763			.0271					
.775				.4041	.3407			
.738		.0000						
.802			.3189					
.834	-.0779							
.839		.2480						
850				.1077	.0818	.0547		
.857			.1017					
.852								-.1803
.865	.2939							
.873		.0039						
900	-.0171			-.0530			-.0891	
.905			-.0791					
.919		-.1172						

AMES 11-073(OA148) -140A/B/C OPB LEFT WING BOT (XEBL78)

ALPHA (2) = .040 BETA (1) = -3.863

SECTION (1)LEFT WING BOT SURF DEPENDENT VARIABLE CP

2Y/BW	.2990	.3640	.4270	.5340	.6730	.7800	.8870	.9720
X/CW								
.950				-.1656	-.1173	-.1444		
.953			-.1830					
.955		-.1897						
.965	-.2351							
1.000			.0032		.0031		-.2319	

ALPHA (2) = .041 BETA (2) = .186 MACH = 1.0990 Q = 599.71 P = 709.30 RN/L = 3.1896

SECTION (1)LEFT WING BOT SURF DEPENDENT VARIABLE CP

2Y/BW	.2990	.3640	.4270	.5340	.6730	.7800	.8870	.9720
X/CW								
.010	-.1022	-.0079	.2900	-.2692	-.4550	-.4194	-.3333	
.020	.0000	-.0146	.2203	-.2513	-.4040	-.5521	-.5964	-.2156
.040		.0086	.0641					
.050	-.1053			-.2363	-.3606	-.4512	-.4791	
.069								-.2144
.080				-.1616				
.091			.0042					
.086		.0667						
.094	-.1115							
.150				-.1135	-.0890	-.0700	-.1256	
.157								-.1333
.163		.1653						
.177			-.0295					
.229	-.0665							
.246		.0213						
.250				-.0265	-.0601	-.0606	-.1180	
.274			.0007					
.315								-.0985
.340		.0235						
.400				.0109	.0382		-.0220	
.402			.0090					
.503								-.1713
.550				.0002	-.0290			
.555			-.6072					
.600							-.1455	
.637		-.0155						
.650						-.1106		
.670								.0691
.700					-.1257			
.725				-.1301				
.750						.3787	.2659	
.760			.0394					

AMES 11-073(OA148) -140A/B/C CRB LEFT WING BOT (XEBL78)

ALPHA (2) = .041 BETA (2) = .186

SECTION (1)LEFT WING BOT SURF DEPENDENT VARIABLE CP

2Y/BW	.2990	.3640	.4270	.5340	.6730	.7800	.8870	.9720
X/CW								
.775				.4018	.3172			
.798		.0440						
.808			.3115					
.834	-.0558							
.839		.2298						
.850				.0997	.0655	.0472		
.857			.0890					
.862								-.2089
.865	.2545							
.879		.0337						
.900	-.0163			-.0521			-.0964	
.905			-.0860					
.919		-.1128						
.950				-.1721	-.1290	-.1441		
.953			-.1841					
.955		-.1776						
.965	-.2171							
1.000			-.0516		-.0646		-.0560	

ALPHA (2) = .035 BETA (3) = 4.252 MACH = 1.0990 Q = 599.71 P = 709.30 RN/L = 3.1896

SECTION (1)LEFT WING BOT SURF DEPENDENT VARIABLE CP

2Y/BW	.2990	.3640	4270	.5340	.6730	.7800	.8870	.9720
X/CW								
.010	-.2026	-.0377	.3633	-.0786	-.3086	-.3679	-.2933	
.020	.0000	-.0133	3160	-.1034	-.2493	-.3516	-.4534	-.1622
.040		.0137	.1756					
.050	-.1481			-.0881	-.2323	-.2646	-.3291	
.069								-.1737
.080				-.0650				
.081			.0905					
.086		.1004						
.094	-.1182							
.150				-.0161	-.0384	-.0746	-.1090	
.157								-.1481
.163		.2101						
.177			.0513					
.229	-.0570							
.246		.0863						
.250				.0105	-.0313	-.0555	-.1047	
.274			.0508					
.345								-.1277
.340		.0712						

AMES 11-073(OA148) -140A/B/C ORB LEFT WING BOT (XEGL78)

ALPHA (2) = .036 BETA (3) = 4.252

SECTION (1)LEFT WING BOT SURF DEPENDENT VARIABLE CP

2Y/BW	.2990	.3540	.4270	.5340	.6730	.7800	.8870	.9720
X/CW								
.400				.0249	.0279		-.0346	
.402			.0372					
.503								-.1775
.550				-.0217	-.0473			
.565			-.5003					
.600							-.1816	
.637		-.0162						
.650						-.1490		
.670								.0629
.700					-.1729			
.725				-.1296				
.750						.3339	.2468	
.760			-.0087					
.775				.3980	.2696			
.799		.0119						
.808			.2780					
.824	-.0713							
.839		.1723						
.850				.0701	.0386	.0347		
.857			.0587					
.862								-.2416
.865	.1970							
.879		.0256						
.900	-.0304			-.0859			-.0990	
.905			-.1010					
.919		-.1321						
.950				-.1969	-.1493	-.1502		
.953			-.1995					
.955		-.1902						
.965	-.2153							
1.000			-.1574		-.1684		-.1193	

ALPHA (3) = 4.005 BETA (1) = -3.864 MACH = 1.0989 Q = 599.58 P = 709.30 RN/L = 3.1896

SECTION (1)LEFT WING BOT SURF DEPENDENT VARIABLE CP

2Y/BW	.2990	.3540	.4270	.5340	.6730	.7800	.8870	.9720
X/CW								
.010	-.0278	-.0735	.4718	.2121	.1289	.2314	.2642	
.030	.0000	-.0068	.4217	.0734	.1150	.1200	.1340	.0756
.040		.0240	.2499					
.050	-.0217			.0570	.0594	.0913	.1266	
.069								.0518
.080				.0665				

AMES 11-073(OA148) -140A/B/C ORB LEFT WING BOT (XEBL78)

ALPHA (3) = 4.006 BETA (1) = -3.864

SECTION (1)LEFT WING BOT SURF DEPENDENT VARIABLE CP

2Y/BW	.2990	.3640	.4270	.5340	.6730	.7800	.8870	.9720
X/CW								
.081			.1456					
.086		.1234						
.094	-.0466							
.150				.1130	.1450	.1466	.1151	
.157								-.0586
.163		.2456						
.177			.1106					
.229	-.0430							
.246		.1138						
.250				.1580	.1503	.1495	.0842	
.274			.1564					
.345								-.0189
.390		.1740						
.400				.1731	.1742		.0875	
.402			1959					
.503								-.0790
.550				.1004	.0784			
.565			-.5854					
.600							-.0727	
.637		.1035						
.650						-.0473		
.670								.1615
.700					-.0931			
.725				.0150				
.750						.5080	.3603	
.760			.1664					
.775				.5573	.4250			
.799		.1562						
.808			.3941					
.834	.0404							
.839		.3007						
.850				.1443	.1000	.096:		
.857			.1360					
.862								-.1455
.865	.3820							
.879		.0793						
.900	.0272			-.0291			-.0478	
.905			-.0538					
.919		-.0793						
.950				-.1354	-.0605	-.1017		
.953			-.1554					
.955		-.1593						
.965	-.2034							
1.000			.0375		-.0193		-.4907	

AMES 11-073(OA148) -140A/B/C ORB LEFT WING BOT (XE8L78)

ALPHA (3) = 4.004 BETA (2) = .194 MACH = 1.0989 Q = 599.58 P = 709.30 RN/L = 3.1896

SECTION (1)LEFT WING BOT SURF DEPENDENT VARIABLE CP

2Y/BW	.2990	.3640	.4270	.5340	.6730	.7800	.8870	.9720
X/CW								
.010	-.1707	-.2059	.4466	.2846	.1931	.2878	.3077	
.020	.0000	-.0867	.4305	.1655	.1844	.1735	.1842	.0049
.040		-.0475	.2993					
.050	-.0808			.1319	.1220	.1397	.1619	
.069								.0030
.080				.1135				
.081			.1935					
.086		.1065						
.094	-.0852							
.150				.1393	.1627	.1713	.1212	
.157								-.0806
.163		.2720						
.177			.1490					
.229	-.0535							
.246		.1414						
.250				.1621	.1617	.1637	.0843	
.274			.1648					
.345								-.0672
.390		.1828						
.400				.1731	.1816		.0839	
.402			.1921					
.503								-.1097
.550				.1040	.0755			
.565			-.6684					
.600							-.0904	
.637		.1022						
.650						-.0536		
.670								.1387
.700					-.0911			
.725				.0297				
.750						.4922	.3491	
.760			.1576					
.775				.5394	.4176			
.798		.1525						
.808			.3853					
.834	.0408							
.839		.2822						
.850				.1390	.0894	.0921		
.857			.1293					
.862								-.1698
.865	.3299							
.873		.0841						
.900	.0427			-.0109			-.0428	
.905			-.0443					
.919		-.0724						

AMES 11-073(OA148) -140A/B/C ORB LEFT WING BOT (XE8L78)

ALPHA (3) = 4.004 BETA (2) = .194

SECTION (1)LEFT WING BOT SURF DEPENDENT VARIABLE CP

2Y/BW	.2990	.3640	.4270	.5340	.6730	.7800	.8870	.9720
X/CW								
.950				-.1404	-.0762	-.0952		
.953			-.1513					
.955		-.1484						
.965	-.1805							
1.000			-.0263		-.0454		-.4920	

ALPHA (3) = 4.004 BETA (3) = 4.242 MACH = 1.0989 Q = 599.58 P = 709.30 RN/L = 3.1896

SECTION (1)LEFT WING BOT SURF DEPENDENT VARIABLE CP

2Y/BW	.2990	.3640	.4270	.5340	.6730	.7800	.8870	.9720
X/CW								
.010	-.3665	-.3350	.3827	.3844	.2755	.3343	.3444	
.020	.0000	-.1761	.4181	.2793	.2420	.2362	.2404	-.1433
.040		-.1230	.3480					
.050	-.1716			.2275	.1768	.1696	.1867	
.069								-.1014
.080				.1976				
.081			.2597					
.086		.0754						
.094	-.1447							
.150				.1788	.1782	.1779	.1196	
.157								-.1265
.163		.3158						
.177			.2082					
.229	-.0863							
.246		.2043						
.250				.1799	.1591	.1631	.0697	
.274			.1927					
.345								-.1351
.390		.2036						
.400				.1627	.1651		.0568	
.402			.1836					
.503								-.1639
.550				.0912	.0608			
.565			-.5638					
.600							-.1148	
.637		.0962						
.650						-.0789		
.670								.0977
.700					-.0889			
.725				.0009				
.750						.4645	.3157	
.760			.1264					

AMES 11-073(OA148) -140A/B/C ORB LEFT WING BOT (XE8L78)

ALPHA (3) = 4.004 BETA (3) = 4.242

SECTION (1)LEFT WING BOT SURF DEPENDENT VARIABLE CP

2Y/BW	.2990	.3640	.4270	.5340	.6730	.7800	.8870	.9720
X/CW								
.775				.5099	.3678			
.798		.1158						
.808			.3329					
.834	.0094							
.839		.2373						
.850				.1106	.0690	.0749		
.857			.1025					
.862							-.2100	
.865	.2840							
.879		.0610						
.900	.0310			-.0547			-.0578	
.905			-.0598					
.919		-.0828						
.950				-.1639	-.1115	-.1069		
.953			-.1610					
.955		-.1476						
.965	-.1684							
1.000			-.1352		-.1117		-.4079	

ALPHA (4) = 8.022 BETA (1) = -3.857 MACH = 1.1003 Q = 600.35 P = 708.37 RN/L = 3.1925

SECTION (1)LEFT WING BOT SURF DEPENDENT VARIABLE CP

2Y/BW	.2990	.3640	.4270	.5340	.6730	.7800	.8870	.9720
X/CW								
.010	-.1284	-.4061	.4601	.6288	.5898	.6506	.6251	
.020	.0000	-.1574	.5356	.5212	.5302	.5377	.5278	-.0353
.040		-.0969	.4821					
.050	.0073			.4101	.4275	.4356	.4270	
.069								.0360
.080				.3605				
.081			.3731					
.086		.0992						
.094	.0147							
.150				.3374	.3583	.3674	.2974	
.157								-.0514
.163		.3773						
.177			.3213					
.229	.0157							
.246		.2930						
.250				.3155	.3150	.3042	.2368	
.274			.3127					
.345								.0418
.340		.3078						

AMES 11-073(OA148) -140A/B/C ORB LEFT WING BOT (XEBL78)

ALPHA (4) = 8.022 BETA (1) = -3.857

SECTION (1)LEFT WING BOT SURF DEPENDENT VARIABLE CP

2Y/BW	.2990	.3640	.4270	.5340	.6730	.7800	.8870	.9720
X/CW								
.400				.2805	.2836		.1932	
.402			.3043					
.503								.1202
.550				.1823	.1685			
.565			-.6272					
.600							.1654	
.637		.1835						
.650						.2239		
.670								.1953
.700					.2391			
.725				.2706				
.750						.5156	.3786	
.760			.2993					
.775				.6142	.4498			
.799		.2893						
.808			.4508					
.834	.2028							
.839		.3471						
.850				.1732	.1240	.1265		
.857			.1772					
.862								-.1140
.865	.4490							
.879		.1232						
.900	.0840			.0032			-.0080	
.905			-.0059					
.919		-.0348						
.950				-.1007	-.0292	-.0565		
.953			-.1079					
.975		-.1232						
.985	-.1500							
1.000			.0156		-.1444		-.6074	

ALPHA (4) = 8.002 BETA (2) = .186 MACH = 1.1003 Q = 600.35 P = 708.37 RN/L = 3.1925

SECTION (1)LEFT WING BOT SURF DEPENDENT VARIABLE CP

2Y/BW	.2990	.3640	.4270	.5340	.6730	.7800	.8870	.9720
X/CW								
.010	-.3460	-.6459	.3253	.6182	.5719	.6164	.5843	
.020	.0000	-.3178	.4492	.5240	.5230	.5321	.5098	-.1710
.040		-.2398	.4645					
.050	-.0914			.4369	.4263	.4334	.4162	
.069								-.0741
.080				.3825				

DATE 10 FEB 76 TABULATED PRESSURE DATA - OA148 (AMES 11-073-1)

AMES 11-073(OA148) -140A/B/C ORC LEFT WING BOT (XEBL78)

ALPHA (4) = 8.002 BETA (2) = .186

SECTION (1)LEFT WING BOT SURF DEPENDENT VARIABLE CP

2Y/BW	.2990	.3640	.4270	.5340	.6730	.7800	.8870	.9720
X/CW								
.081			.3905					
.086		.0190						
.094	-.0546							
.150				.3386	.3582	.3623	.2912	
.157								-.0883
.163		.3739						
.177			.3428					
.229	-.0282							
.246		.2903						
.250				.3165	.3154	.3010	.2224	
.274			.3160					
.345								-.0121
.390		.3061						
.400				.2755	.2775		.1735	
.402			.2940					
.503								.0938
.540				.1838	.1619			
.565			-.7120					
.600							.1498	
.637		.1804						
.650						.2100		
.670								.1555
.700					.2330			
.725				.2639				
.750						.5094	.3598	
.760			.2892					
.775				.6033	.4358			
.798		.2802						
.808			.4377					
.834	.1899							
.839		.3335						
.850				.1706	.1200	.1216		
.857			.1708					
.862								-.1557
.865	.4171							
.879		.1333						
.900	.0995			.0034			-.0041	
.905			-.0034					
.919		-.0302						
.950				-.1029	-.0438	-.0585		
.953			-.1095					
.955		-.1102						
.965	-.1296							
1.000			-.0302		-.0941		-.6775	

AMES 11-073(OA148) -140A/B/C ORB LEFT WING BOT (XEBL78)

ALPHA (4) = 7.997 BETA (3) = 4.238 MACH = 1.1003 Q = 600.35 P = 708.37 RN/L = 3.1925

SECTION (1)LEFT WING BOT SURF DEPENDENT VARIABLE CP

2Y/BW	.2990	.3640	.4270	.5340	.6730	.7800	.8870	.9720
X/CW								
.010	-.5602	-.4362	.1899	.5901	.5442	.5517	.5147	
.020	.0000	-.3528	.3640	.5271	.5057	.4987	.4671	-.3507
.040		-.2854	.4372					
.050	-.1966			.4470	.4245	.4091	.3933	
.069								-.2096
.080				.3924				
.081			.3970					
.086		-.0324						
.094	-.1328							
.150				.3431	.3483	.3416	.2662	
.157								-.1403
.163		.3288						
.177			.3487					
.229	-.0682							
.246		.2958						
.250				.3116	.2973	.2853	.1938	
.274			.3195					
.345								-.0812
.390		.3078						
.400				.2593	.2561		.1406	
.402			.2860					
.503								.0425
.550				.1659	.1421			
.585			-.6235					
.600							.0953	
.637		.1681						
.650						.1747		
.670								.0988
.700					.2024			
.725				.2285				
.750						.4718	.3321	
.760			.2530					
.775				.5519	.3998			
.798		.2369						
.802			.3968					
.834	.1336							
.839		.3046						
.850				.1515	.0918	.1050		
.857			.1576					
.862								-.2055
.865	.3820							
.879		.1352						
.900	.0996			-.0136			-.0231	
.905			-.0101					
.919		-.0314						

AMES 11-073(OA148) -140A/B/C ORB LEFT WING BOT (XE8L78)

ALPHA (4) = 7.997 BETA ( ) = 4.238

SECTION (1)LEFT WING BOT SURF DEPENDENT VARIABLE CP

2Y/BW	.2990	.3640	.4270	.5340	.6730	.7800	.8870	.9720
X/CW								
.950				-.1228	-.0680	-.0704		
.953			-.1118					
.955		-.1034						
.965	-.1122							
1.000			-.1300		-.1200		-.6908	

ALPHA (5) = 11.963 BETA (1) = -3.838 MACH = 1.0980 Q = 599.15 P = 710.01 RN/L = 3.1917

SECTION (1)LEFT WING BOT SURF DEPENDENT VARIABLE CP

2Y/BW	.2990	.3640	.4270	.5340	.6730	.7800	.8870	.9720
X/CW								
.010	-.2965	-.5818	.2303	.7538	.7520	.7390	.6949	
.020	.0000	-.2127	.4612	.7092	.7229	.7205	.6765	-.1997
.040		-.1297	.5665					
.050	.0128			.6175	.6326	.6287	.6017	
.069								-.0301
.080				.5550				
.081			.5244					
.086		.1970						
.094	.0609							
.150				.4939	.5184	.5227	.4534	
.157								-.0508
.163		.4769						
.177			.4662					
.229	.0860							
.246		.4111						
.250				.4473	.4529	.4462	.3774	
.274			.4324					
.345								.1381
.390		.4145						
.400				.3872	.3940		.3198	
.422			.4015					
.503								.1633
.550				.2922	.2930			
.565			-.6833					
.600							.2637	
.637		.2757						
.650						.3072		
.670								.2143
[illegible]					.3050			
[illegible]				.3282				
.750						.5424	.4095	
[illegible]			.3421					

AMES 11-073(OA148) -140A/B/C ORB LEFT WING (XE8L78)

ALPHA (5) = 11.963 BETA (1) = -3.838

SECTION (1)LEFT WING BOT SURF DEPENDENT VARIABLE CP

2Y/BW	.2990	.3640	.4270	.5340	.6730	.7800	.8870	.9720
X/CW								
.775				.6433	.4640			
.798		.3360						
.808			.4782					
.834	.2505							
.839		.3687						
.850				.2063	.1523	.1705		
.857			.2099					
.862								-.0818
.865	.4848							
.879		.1674						
.900	.1234			.0424			.0493	
.905			.0303					
.919		.0022						
.930				-.0572	.0014	.0086		
.953			-.0626					
.955		-.0813						
.965	-.1060							
1.000			-.0568		-.2450		-.6744	

ALPHA (5) = 11.967 BETA (2) = .194 MACH = 1.0980 Q = 599.15 P = 710.01 RN/L = 3.1917

SECTION (1)LEFT WING BOT SURF DEPENDENT VARIABLE CP

2Y/BW	.2990	.3640	.4270	.5340	.6730	.7800	.8870	.9720
X/CW								
.010	-.5102	-.6599	-.0092	.6790	.6065	.6451	.5984	
.040	.0000	-.3422	.2802	.6793	.6778	.6655	.6134	-.3526
.040		-.2520	.4859					
.040	-.0343			.6048	.6196	.5974	.5619	
.069								-.1451
.080				.5481				
.081			.4991					
.086		.0726						
.094	-.0240							
.150				.4920	.5073	.5076	.4269	
.157								-.0933
.163		.4083						
.177			.4633					
.229	.0379							
.246		.3773						
.250				.4364	.4401	.4330	.3550	
.274			.4254					
.345								.0832
.390		.4097						

AMES 11-073(OA148) -140A/B/C ORB LEFT WING BOT (XEBL78)

ALPHA (5) = 11.967 BETA (2) = .194

SECTION (1)LEFT WING BOT SURF DEPENDENT VARIABLE CP

2Y/BW	.2990	.3640	.4270	.5340	.6730	.7800	.8870	.9720
X/CW								
.400				.3724	.3847		.2953	
.402			.3897					
.503								.1177
.550				.2854	.2867			
.565			-.7391					
.600							.2384	
.637		.2675						
.650						.2905		
.670								.1710
.700					.2953			
.725				.3207				
.750						.5167	.3838	
.760			.3340					
.775				.6277	.4468			
.798		.3324						
.808			.4660					
.834	.2404							
.839		.3632						
.850				.2023	.1423	.1613		
.857			.2065					
.862								-.1226
.855	.4666							
.879		.1715						
.900	.1382			.0384			.0446	
.905			.0306					
.919		.0079						
.950				-.0624	-.0116	-.0059		
.953			-.0649					
.965		-.0715						
.965	-.0813							
1.000			-.1484		-.1909		-.6891	

ALPHA (3) = 11.958 BETA (3) = 4.256 MACH = 1.0980 Q = 599.15 P = 710.01 RN/L = 3.1917

SECTION (1)LEFT WING BOT SURF DEPENDENT VARIABLE CP

2Y/BW	.2990	.3640	.4270	.5340	.6730	.7800	.8870	.9720
X/CW								
.010	-.6571	-.6805	-.1517	.5752	.5848	.5169	.4724	
.020	.0000	-.4692	.1598	.6069	.6027	.5825	.5214	-.4865
.040		-.3793	.3971					
.050	-.2007			.5680	.5657	.5405	.4993	
.069								-.2662
.080				.5174				

AMES 11-073(OA148) -140A/B/C ORB LEFT WING BOT (XE8L78)

ALPHA (5) = 11.958 BETA (3) = 4.256

SECTION (1)LEFT WING BOT SURF DEPENDENT VARIABLE CP

2Y/BW	.2990	.3540	.4270	.5340	.6730	.7800	.8870	.9720
X/CW								
.081			.4641					
.086		-.0160						
.094	-.1042							
.150				.4580	.4724	.4673	.3795	
.157								-.1525
.163		.3473						
.177			.4509					
.229	-.0175							
.246		.3483						
.250				.4127	.4103	.3978	.3164	
.274			.4120					
.345								.0134
.390		.3893						
.400				.3475	.3544		.2588	
.402			.3663					
.503								.0637
.550				.2612	.2611			
.565			-.6709					
.600							.1993	
.637		.2447						
.650						.2594		
.670								.1162
.700					.2726			
.725				.2997				
.750						.4772	.3455	
.760			.3150					
.775				.5879	.4131			
.799		.3099						
.808			.4386					
.834	.2167							
.839		.3485						
.850				.1858	.1176	.1373		
.857			.1954					
.862								-.1733
.865	.4491							
.879		.1753						
.900	.1452			.0245			.0213	
.905			.0256					
.919		.0113						
.950				-.0789	-.0299	-.0234		
.953			-.0676					
.955		-.0665						
.965	-.0672							
1.000			-.2607		-.1981		-.7682	

AMES 11-073(OA148) -140A/B/C ORB LEFT WING BOT (XEBL79) (05 AUG 75)

REFERENCE DATA

SREF = 2690.0000 SQ.FT. XMRP = 1076.5800 IN. XO
LREF = 47[illegible].8000 IN. YMRP = .0000 IN. YO
BREF = 935.0000 IN. ZMRP = 375.0000 IN. ZO
SCALE = .0300

PARAMETRIC DATA

RUDDER = -10.000 SPOERK = .000
BDFLAP = -11.700 L-ELVN = 10.000
R-ELVN = -10.000 MACH = .900

ALPHA (1) = -4.051 BETA (1) = -3.840 MACH = .89997 Q = 600.24 P = 1058.8 RN/L = 3.5827

SECTION (1)LEFT WING BOT SURF DEPENDENT VARIABLE CP

2Y/BW	.2990	.3640	.4270	.5340	.6730	.7800	.8870	.9720
X/CW								
.010	-.1334	-.2958	-.4837	-1.0863	-1.2536	-1.0154	-1.0336	
.020	.0000	-.2448	-.5249	-1.2650	-1.3021	-.3280	-1.3307	-.9536
.040		-.2247	-.6375					
.050	-.1306			-1.1618	-1.3031	-1.3657	-1.3620	
.069								-.8063
.080				-1.0712				
.091			-.4770					
.086		-.1107						
.094	-.1133							
.150				-.6238	-1.1373	-1.2167	-1.2474	
.157								-.4057
.163		-.1621						
.177			-.4652					
.229	-.0490							
.246		-.3088						
.250				-.4063	-.4549	-.8670	-.8885	
.274			-.3732					
.345								-.4474
.390		-.3356						
.400				-.2674	-.2417		-.4505	
.402			-.2568					
.503								-.3358
.560				-.2568	-.1667			
.565			-.7487					
.600							-.0866	
.637		-.2835						
.650						-.0446		
.670								-.2147
.700					-.0550			
.725				-.0296				
.750						.1451	.0611	
.760			-.0022					
.775				.1754	.0845			
.793		-.0144						
.809			.0952					
.834	-.0822							
.839		-.0098						
.850				-.1567	-.1665	-.1793		

AMES 11-073(OA148) -140A/B/C ORB LEFT WING BOT (XEBL79)

ALPHA (1) = -4.051 BETA (1) = -3.840

SECTION (1)LEFT WING BOT SURF DEPENDENT VARIABLE CP

2Y/BW	.2990	.3640	.4270	.5340	.6730	.7800	.8870	.9720
X/CW								
.857			-.1684					
.862								-.1592
.865	.0649							
.879		-.2207						
.900	-.2797			-.2881			-.1199	
.905			-.3623					
.919		-.3982						
.950				-.2320	-.1784	-.1591		
.953			-.2691					
.955		-.2615						
.965	-.2602							
1.000			-.0397		-.0760		.0175	

ALPHA (1) = -4.055 BETA (2) = .202 MACH = .89997 Q = 600.24 P = 1058.8 RN/L = 3.5827

SECTION (1)LEFT WING BOT SURF DEPENDENT VARIABLE CP

2Y/BW	.2990	.3640	.4270	.5340	.6730	.7800	.8870	.9720
X/CW								
.010	-.0418	-.1204	-.32[illegible]7	-1.0762	-1.2792	-1.0690	-1.1047	
.020	.0000	-.0993	-.3739	-1.2393	-1.3319	-1.3650	-1.1345	-.5910
.040		-.0781	-.4792					
.050	-.0577			-1.1150	-1.2724	-1.2921	-1.1052	
.069								-.5420
.080				-.6959				
.081			-.3803					
.086		-.0256						
.094	-.0556							
.150				-.5173	-.6979	-1.0578	-.9002	
.157								-.3086
.163		-.0888						
.177			-.4095					
.229	-.0078							
.246		-.2389						
.250				-.3632	-.4024	-.6372	-.7407	
.274			-.3145					
.345								-.3667
.390		-.2857						
.400				-.2574	-.2736		-.5501	
.402			-.2465					
.503								-.3249
.550				-.3013	-.3058			
.645			-.7518					
.800							-.2698	

AMES 11-073(OA148) -140A/B/C ORB LEFT WING BOT (XEBL79)

ALPHA (1) = -4.055 BETA (2) = .202

SECTION (1)LEFT WING BOT SURF DEPENDENT VARIABLE CP

2Y/BW	.2990	.3640	.4270	.5340	.6730	.7800	.8870	.9720
X/CW								
.637		-.2879						
.650								
.670						-.1005		
.700								-.2420
.725					-.0855			
.750				-.0545				
.760						.1349	-.1151	
.775			-.0228					
.798				.1966	.0928			
.808		-.0358						
.834	-.1003		.0790					
.839		-.0100						
.850				-.1736	-.2065	-.2117		
.857			-.1763					
.862								
.865	.0633							-.1787
.879		-.2197						
.900	-.2714			-.3428			-.1320	
.905			-.3753					
.919		-.3943						
.950				-.4212	-.3077	-.2496		
.953			-.4530					
.955		-.4090						
.965	-.3879							
1.000			-.1186		-.1286		-.0761	

ALPHA (1) = -4.070 BETA (3) = 4.283 MACH = .89997 Q = 600.24 P = 1058.8 RN/L = 3.5827

SECTION (1)LEFT WING BOT SURF DEPENDENT VARIABLE CP

2Y/BW	.2990	.3640	.4270	.5340	.6730	.7800	.8870	.9720
X/CW								
.010	.0094	-.0048	-.1730	-1.0536	-1.2941	-1.1029	-.9243	
.020	.0000	.0059	-.2262	-1.1021	-1.3231	-1.1592	-.8828	-.5689
.040		.0190	-.3183					
.050	-.0092			-.7129	-1.2504	-1.1390	-.8876	
.059								
.080				-.5468				-.5296
.081			-.3095					
.095		.0353						
.094	-.0125							
.150				-.4481	-.5275	-.9224	-.8456	
.157								
.153		-.0252						-.3253

AMES 11-073(CA148) -140A/B/C ORB LEFT WING BOT (XEBL79)

ALPHA (1) = -4.070 BETA (3) = 4.283

SECTION (1)LEFT WING BOT SURF DEPENDENT VARIABLE CP

2Y/BW	.2990	.3640	.4270	.5340	.6730	.7800	.8870	.9720
X/CW								
.177			-.3192					
.229	.0198							
.246		-.2021						
.250				-.3347	-.3676	-.6177	-.7678	
.274			-.2895					
.345								-.3695
.390		-.2539						
.400				-.2575	-.2610		-.5529	
.402			-.2341					
.503								-.3010
.550				-.3060	-.3460			
.565			-.7428					
.600							-.2391	
.637		-.2905						
.650						-.1050		
.670								-.2585
.700					-.0983			
.725				-.0838				
.750						.1809	-.0531	
.760			-.0914					
.775				.2355	.0951			
.798		-.0916						
.808			.0661					
.834	-.1543							
.835		-.0193						
.850				-.1643	-.1928	-.2329		
.857			-.1582					
.862								-.2114
.865	.0148							
.879		-.2084						
.900	-.2456			-.3513			-.2066	
.906			-.3585					
.919		-.3739						
.950				-.4670	-.3745	-.3592		
.953			-.4589					
.955		-.4291						
.965	-.4193							
1.000			-.1620		-.1744		-.1666	

AMES 11-073(OA148) -140A/B/C ORB LEFT WING BOT (XE8L79)

ALPHA (2) = .045 BETA (1) = -3.859 MACH = .89957 Q = 599.75 P = 1058.8 RN/L = 3.5771

SECTION (1)LEFT WING BOT SURF DEPENDENT VARIABLE CP

2Y/BW	.2990	.3640	.4270	.5340	.6730	.7800	.8870	.9720
X/CW								
.010	.0427	.0928	.1128	-.6554	-.8248	-.7506	-.6198	
.020	.0000	.0776	.0009	-.6156	-.7587	-.7407	-.8832	-.2934
.040		.0883	-.1641					
.050	.0099			-.5164	-.5766	-.6754	-.7454	
.069								-.3414
.080				-.3536				
.081			-.1962					
.086		.1016						
.094	-.0034							
.150				-.2173	-.2190	-.2580	-.2693	
.157								-.2068
.163		.0254						
.177			-.1731					
.229	.0329							
.246		-.1253						
.250				-.1517	-.2010	-.2318	-.2708	
.274			-.1261					
.345								-.2500
.330		-.1046						
.400				-.1227	-.1339		-.1847	
.403			-.0829					
.503								-.1755
.550				-.1893	-.1855			
.565			-.8354					
.600							-.0869	
.637		-.1877						
.650						-.0505		
.670								-.1167
.700					-.0416			
.725				-.0124				
.750						.2170	.0891	
.760			.0271					
.775				.2777	.1538			
.798		.0296						
.808			.1380					
.834	-.0424							
.839		.0446						
.850				-.1472	-.1769	-.2047		
.857			-.1487					
.862								-.3746
.865	.1487							
.879		-.2052						
.900	-.2653			-.3037			-.3754	
.905			-.3477					
.919		-.3796						

AMES 11-073(OA148) -140A/B/C ORB LEFT WING BOT (XEBL79)

ALPHA (2) = .045 BETA (1) = -3.859

SECTION (1)LEFT WING BOT SURF DEPENDENT VARIABLE CP

2Y/BW	.2990	.3640	.4270	.5340	.6730	.7800	.8870	.9720
X/CW								
.950				-.2494	-.1584	-.1266		
.953			-.2622					
.955		-.2644						
.955	-.2399							
1.000			-.0347		-.0150		.0601	

ALPHA (2) = .042 BETA (2) = .192 MACH = .89957 Q = 599.75 P = 1058.8 RN/L = 3.1771

SECTION (1)LEFT WING BOT SURF DEPENDENT VARIABLE CP

2Y/BW	.2990	.3640	.4270	.5340	.6730	.7800	.8870	.9720
X/CW								
.010	.0352	.1155	.1882	-.4678	-.6512	-.7011	-.6170	
.020	.0000	.1143	.1027	-.4705	-.5874	-.6270	-.7739	-.3277
.040		.1288	-.0553					
.050	.0220			-.3631	-.4629	-.5480	-.6444	
.069								
.090				-.2883				-.3388
.081			-.1262					
.085		.1359						
.094	.0151							
.150				-.1914	-.2033	-.2262	-.3241	
.157								
.163		.0777						-.2274
.177			-.1403					
.229	.0510							
.245		-.0890						
.250				-.1404	-.1914	-.2224	-.2632	
.274			-.1127					
.345								
.390		-.0871						-.2645
.400				-.1283	-.1471		-.2003	
.402			-.0841					
.503								
.550				-.2080	-.1966			-.1582
.565			-.8610					
.600								
.637		-.2007					-.0794	
.650						-.0581		
.670								
.700					-.0466			-.1306
.725				-.0208				
.750						.2176	.0822	
.760			.0240					

AMES 11-073(OA148) -140A/B/C ORB LEFT WING BOT (XE8L79)

ALPHA (2) = .042 BETA (2) = .192

SECTION (1)LEFT WING BOT SURF DEPENDENT VARIABLE CP

2Y/BW	.2990	.3640	.4270	.5340	.6730	.7800	.8870	.9720
X/CW								
.775				.2843	.1514			
.798		.0171						
.808			.1396					
.834	-.0611							
.839		.0410						
.850				-.1510	-.1892	-.2096		
.857			-.1526					
.862								-.4514
.865	.1286							
.879		-.2008						
.900	-.2430			-.3408			-.3905	
.905			-.3597					
.919		-.3839						
.950				-.4545	-.3359	-.3753		
.953			-.4659					
.955		-.4420						
.965	-.4089							
1.000			-.1336		-.0764		-.0108	

ALPHA (2) = .032 BETA (3) = 4.260 MACH = .89957 Q = 599.75 P = 1058.8 RN/L = 3.5771

SECTION (1)LEFT WING BOT SURF DEPENDENT VARIABLE CP

2Y/BW	.2990	.3640	.4270	.5340	.6730	.7800	.8870	.9720
X/CW								
.010	-.0052	.0845	.2333	-.3079	-.5129	-.5878	-.5414	
.020	.0000	.1078	.1663	-.3639	-.4320	-.4952	-.6264	-.2934
.040		.1258	.0213					
.050	.0171			-.2495	-.3668	-.4134	-.4801	
.069								-.3179
.080				-.2166				
.081			-.0636					
.086		.1491						
.094	.0167							
.150				-.1551	-.1693	-.2078	-.3091	
.157								-.2385
.163		.1135						
.177			-.1013					
.229	.0533							
.246		-.0566						
.250				-.1286	-.1683	-.2033	-.2565	
.274			-.0933					
.345								-.2365
.390		-.0716						

AMES 11-073(OA148) -140A/B/C ORB LEFT WING BOT (XE8L79)

ALPHA (2) = .032 BETA (3) = 4.260

SECTION (1)LEFT WING BOT SURF DEPENDENT VARIABLE CP

2Y/BW	.2990	.3640	.4270	.5340	.6730	.7800	.8870	.9720
X/CW								
.400				-.1291	-.1486		-.1995	
.402			-.0904					
.503								-.1457
.550				-.2083	-.2092			
.565			-.8605					
.600							-.0882	
.627		-.1965						
.650						-.0663		
.670								-.1399
.700					-.0556			
.725				-.0307				
.750						.2159	.0792	
.760			.0028					
.775				.2860	.1392			
.799		-.0029						
.808			.1254					
.834	-.0853							
.839		.0169						
.850				-.1569	-.2071	-.2135		
.857			-.1510					
.862								-.4967
.865	.0918							
.879		-.1897						
.900	-.2270			-.3488			-.3928	
.906			-.3547					
.919		-.3729						
.950				-.4698	-.3774	-.4246		
.953			-.4636					
.965		-.4336						
.965	-.4326							
1.000			-.1902		-.1633		-.1690	

ALPHA (3) = 4.023 BETA (1) = -3.861 MACH = .90070 Q = 600.44 P = 1057.3 RN/L = 3.5793

SECTION (1)LEFT WING BOT SURF DEPENDENT VARIABLE CP

2Y/BW	.2990	.3640	.4270	.5340	.6730	.7800	.8870	.9720
X/CW								
.010	.0262	.1207	.4095	.1195	.0572	.1511	.1722	
.020	.0000	.1715	.3539	-.0026	.0272	.0151	.0174	-.0947
.040		.1988	.1805					
.050	.0637			-.0182	-.0311	-.0224	-.0257	
.069								-.1395
.080				-.0206				

DATE 10 FEB 75 TABULATED PRESSURE DATA - OA148 (AMES 11-073-1)

AMES 11-073(OA148) -140A/B/C ORB LEFT WING BOT (XEBL79)

ALPHA (3) = 4.023 BETA (1) = -3.861

SECTION (1)LEFT WING BOT SURF DEPENDENT VARIABLE CP

2Y/SW	.2990	.3640	.4270	.5340	.6730	.7800	.8870	.9720
X/CW								
.081			.0739					
.086		.2339						
.094	.0660							
.150				.0064	.0040	.0009	-.0541	
.157								-.1452
.163		.2068						
.177			.0330					
.229	.1066							
.246		.0521						
.250				.0217	-.0072	-.0274	-.0759	
.274			.0318					
.345								-.1421
.390		.0409						
.400				-.0040	-.0076		-.0716	
.402			.0306					
.503								-.1219
.550				-.0834	-.0786			
.565			-.9044					
.600							-.0607	
.637		-.0880						
.650						-.0423		
.670								-.0501
.700					-.0007			
.725				.0323				
.750						.2719	.1314	
.760			.0672					
.775				.3613	.1968			
.799		.0674						
.809			.1736					
.834	-.0145							
.839		.0698						
.850				-.1255	-.1817	-.1772		
.857			.1217					
.822								-.3363
.865	.1919							
.879		-.1720						
.900	-.2305			-.3170			-.3490	
.905			-.3321					
.919		-.3518						
.950				-.3105	-.2570	-.3723		
.953			-.2229					
.955		-.2445						
.965	-.2195							
1.000			.0073		.0306		-.4404	

AMES 11-073(OA148) -140A/B/C ORB LEFT WING BOT (XEBL79)

ALPHA (3) = 4.017 BETA (2) = .197 MACH = .90070 Q = 600.44 P = 1057.3 RN/L = 3.5793

SECTION (1)LEFT WING BOT SURF DEPENDENT VARIABLE CP

EY/BW	.2990	.3640	.4270	.5340	.6730	.7800	.8870	.9720
X/CW								
.010	-.0833	-.0011	.3779	.1956	.1039	.1701	.1825	
.020	.0000	.0948	.3539	.0708	.0650	.0615	.0398	-.2081
.040		.1375	.2167					
.050	.0225			.0380	-.0029	-.0126	-.0174	
.069								-.2169
.080				.0214				
.081			.1069					
.085		.2186						
.094	.0453							
.150				.0266	.0132	.0002	-.0600	
.157								-.1746
.163		.2173						
.177			.0458					
.229	.0978							
.248		.0623						
.250				.0138	-.0170	-.0359	-.0994	
.271			.0352					
.346								-.2044
.390		.0402						
.401				-.0155	-.0201		-.0935	
.409			.0261					
.517								-.1571
.551				-.0956	-.0986			
.574			-.9493					
.600							-.0842	
.631		-.1041						
.670						-.0558		
.690								-.0956
.700					-.0041			
.714				.0151				
.734						.2543	.0978	
.750			.0542					
.775				.3408	.1975			
.799		.0509						
.805			.1683					
.834	-.0303							
.837		.0604						
.850				-.1325	-.1832	-.1920		
.857			-.1298					
.882								-.4210
.895	.1592							
.899		-.1709						
.900	-.2145			-.3221			-.3614	
.905			-.3356					
.919		-.3576						

DATE .. FEB 75 TABULATED PRESSURE DATA - OA148 (AMES 11-073-1)

AMES 11-073(OA148) -140A/B/C ORB LEFT WING BOT (XEBL79)

ALPHA (3) = 4.017 BETA (2) = .197

SECTION (1)LEFT WING BOT SURF DEPENDENT VARIABLE CP

2Y/BW	.2990	.3640	.4270	.5340	.6730	.7800	.8870	.9720
X/CW								
.950				-.4290	-.3017	-.3933		
.953			-.4414					
.955		-.4084						
.965	-.4059							
1.000			-.1055		-.0800		-.3916	

ALPHA (3) = 4.017 BETA (3) = 4.251 MACH = .90070 Q = 600.44 P = 1057.3 RN/L = 3.5793

SECTION (1)LEFT WING BOT SURF DERENDENT VARIABLE CP

2Y/BW	.2990	.3540	.4270	.5340	.6730	.7800	.8870	.9720
X/CW								
.010	-.2083	-.1544	.3022	.2524	.1554	.2160	.2053	
.020	.0000	-.0067	.3239	.1378	.1069	.1063	.0852	-.3490
.040		.0468	.2351					
.050	-.0278			.0940	.0399	.0223	.0123	
.069								-.3038
.080				.0578				
.081			.1325					
.086		.1784						
.094	.0034							
.150				.0403	.0275	.0075	-.0621	
.157								-.2277
.163		.2212						
.177			.0716					
.229	.0730							
.246		.0791						
.250				.0223	-.0113	-.0339	-.1056	
.274			.0412					
.345								-.2460
.390		.0499						
.400				-.0156	-.0251		-.1123	
.402			.0188					
.503								-.1938
.550				-.0935	-.1091			
.565			-.9439					
.570							-.1028	
.667		-.1037						
.670						-.0636		
.670								-.1361
[illegible]					-.0303			
[illegible]				.0031				
[illegible]						.2341	.0624	
.760			.0436					

AMES 11-073(OA148) -140A/B/C ORB LEFT WING BOT (XEBL79)

ALPHA (3) = 4.017 BETA (3) = 4.251

SECTION : 11LEFT WING BOT SURF DEPENDENT VARIABLE CP

2Y/BW	.2930	.3640	.4270	.5340	.6730	.7800	.8870	.9720
X/CW								
.775				.3296	.1637			
.798		.0374						
.808			.1492					
.834	-.0418							
.839		.0410						
.850				-.1419	-.1912	-.2066		
.857			-.1313					
.862								-.5131
.865	.1403							
.879		-.1689						
.900	-.2023			-.3333			-.3479	
.905			-.3283					
.919		-.3570						
.950				-.4408	-.3475	-.4044		
.955			-.4371					
.955		-.4157						
.955	-.4166							
1.000			-.1853		-.1655		-.2087	

ALPHA (4) = 7.937 BETA (4) = -3.857 MACH = .90017 Q = 600.17 P = 1058.1 RN/L = 3.5825

SECTION : 1 LEFT WING BOT SURF DEPENDENT VARIABLE CP

2Y/BW	.2990	.3640	.4270	.5340	.6730	.7800	.8870	.9720
X/CW								
.010	-.1751	-.1894	-.173	.5114	.4645	.5208	.4885	
.020	.0000	.0480	.4741	.3879	.3900	.4023	.3816	-.2778
.040		.1240	.3916					
.050	.0372			.2879	.2833	.2883	.2757	
.060								-.1813
.067				.2326				
.081			.2774					
.088		.2881						
.094	.0839							
.150				.1958	.2019	.2032	.1322	
.157								-.1374
.163		.3384						
.177			.1993					
.229	.1639							
.246		.1914						
.250				.1637	.1532	.1353	.0702	
.274			.1687					
.345								-.0816
.390		.1594						

AMES 11-073(OA148) -140A/B/C ORB LEFT WING BOT (XEBL79)

ALPHA (4) = 7.937 BETA (1) = -3.857

SECTION (1)LEFT WING BOT SURF DEPENDENT VARIABLE CP

2Y/BW	.2930	.3640	.4270	.5340	.6730	.7800	.8870	.9720
X/CW								
.400								
.402				.1092	.1100		.0389	
.503			.1383					
.550								-.0727
.565				.0159	.0177			
.600			-.6444					
.637		-.0002					.0087	
.650								
.670						.0433		
.700								-.0407
.725					.0389			
.750				.0723				
.760						.2987	.1484	
.775			.1031					
.799				.3906	.2212			
.808		.0971						
.834			.2081					
.839	.0186							
.850		.0929						
.857				-.0936	-.1470	-.1361		
.862			-.0918					
.865	.2230							-.3410
.873								
.900	-.1968	-.1440						
.905				-.2760			-.2730	
.919			-.3006					
.950		-.3275						
.953				-.3793	-.2946	-.2955		
.955			-.3948					
.965	-.3431	-.3670						
1.000			.0089		-.1746		-.5680	

ALPHA (4) = 7.934 BETA (2) = .192 MACH = .90017 Q = 600.17 P = 1058.1 RN/L = 3.5825

SECTION (1)LEFT WING BOT SURF DEPENDENT VARIABLE CP

2Y/BW	.2930	.3640	.4270	.5340	.6730	.7800	.8870	.9720
X CW								
.010	-.3534	-.3866	.2766	.4958	.4435	.4692	.4299	
.020	.0000	-.0002	.3845	.3950	.3892	.3791	.3454	-.4512
.040		-.0033	.3712					
.050	-.0457			.3002	.2787	.2659	.2463	
.069								
.090				.2446				-.3165

AMES 11-073(OA148) -140A/B/C ORB LEFT WING BOT (XEBL79)

ALPHA (4) = 7.934 BETA (2) = .192

SECTION (1)LEFT WING BOT SURF DEPENDENT VARIABLE CP

2Y/SW	.2990	.3640	.4270	.5340	.6730	.7800	.8870	.9720
X/CW								
.081			.2757					
.085		.2205						
.094	.0289							
.150				.1900	.1892	.1819	.1037	
.157								-.1799
.163		.3202						
.177			.1963					
.229	.1295							
.245		.1873						
.250				.1490	.1354	.1210	.0366	
.274			.1616					
.345								-.1441
.390		.1572						
.400				.0961	.0885		.0057	
.402			.1243					
.500								-.1252
.550				.0026	.0036			
.560			-.6578					
.600							-.0228	
.637		-.0092						
.650						.0180		
.675								-.0894
.700					.0217			
.725				.0550				
.750						.2782	.1254	
.760			.0935					
.775				.3742	.2006			
.798		.0959						
.800			.1980					
.834	.0082							
.850		.0945						
.850				-.1016	-.1666	-.1516		
.857			-.0983					
.882								-.3974
.885	.2015							
.899		-.1355						
.900	-.1822			-.2897			-.2977	
.905			-.3033					
.919		-.3300						
.950				-.4051	-.3091	-.3159		
.953			-.4017					
.955		-.3928						
.985	-.3859							
1.000			-.0123		-.1302		-.6044	

AMES 11-073(OA148) -140A/B/C ORB LEFT WING BOT (XEBL79)

ALPHA (4) = 7.926 BETA (3) = 4.250 MACH = .90017 Q = 600.17 P = 1058.1 RN/L = 3.5825

SECTION (1)LEFT WING BOT SURF DEPENDENT VARIABLE CP

Y/BW	.2930	.3540	.4270	.5340	.6730	.7800	.8870	.9720
X/CW								
.010	-.5314	-.3379	.0990	.4539	.3984	.4052	.3563	
.020	.0000	-.1696	.2637	.3823	.3590	.3565	.3095	-.6495
.040		-.0941	.3207					
.050	-.1206			.2943	.2628	.2551	.2285	
.069								-.4383
.080				.2368				
.081			.2582					
.086		.1424						
.094	-.0295							
.150				.1779	.1898	.1716	.0922	
.157								-.2473
.163		.2792						
.177			.1950					
.229	.0913							
.246		.1707						
.250				.1375	.1243	.1076	.0213	
.274			.1518					
.345								-.1935
.390		.1485						
.400				.0732	.0781		-.0183	
.402			.1026					
.503								-.1712
.550				-.0038	-.0088			
.555			-.6833					
.600							-.0497	
.637		-.0136						
.650						.0010		
.670								-.1318
.700					.0093			
.725				.0465				
.740						.2466	.1008	
.750			.0767					
.775				.3411	.1703			
.799		.0761						
.809			.1750					
.834	-.0095							
.839		.0731						
.850				-.1116	-.1777	-.1575		
.857			-.1034					
.870								-.4484
.875	.1864							
.879		-.1302						
.900	-.1749			-.2957			-.3004	
.905			-.3006					
.919		-.3252						

AMES 11-073(OA148) -140A/B/C ORB LEFT WING BOT (XEBL79)

ALPHA (4) = 7.926 BETA (3) = 4.250

SECTION (1)LEFT WING BOT SURF DEPENDENT VARIABLE CP

2Y/BW	.2990	.3640	.4270	.5340	.6730	.7800	.8870	.9720
X/CW								
.950				-.4133	-.3189	-.3313		
.953			-.3989					
.955		-.3772						
.965	-.4046							
1.000			-.0865		-.1212		-.6078	

ALPHA (5) = 11.969 BETA (1) = -3.847 MACH = .89890 Q = 599.14 P = 1059.2 RN/L = 3.5769

SECTION (1)LEFT WING BOT SURF DEPENDENT VARIABLE CP

2Y/BW	.2990	.3640	.4270	.5340	.6730	.7800	.8870	.9720
X/CW								
.010	-.4792	-.5537	.2011	.6367	.6133	.5948	.5347	
.020	.0000	-.1338	.4193	.5938	.5832	.5734	.5222	-.4209
.040		-.0233	.4910					
.060	-.0135			.4959	.4800	.4753	.4404	
.080								-.2365
.080				.4196				
.085			.4191					
.086		.2827						
.094	.0827							
.150				3437	.3570	.3537	.2782	
.157								-.1484
.163		.4234						
.177			.3363					
.224	.2077							
.240		.3121						
.250				.2854	.2863	2697	.2007	
.274			2857					
.345								-.0365
.330		.2703						
.400				.2122	.2161		.1393	
.404			.2353					
.503								-.0458
.550				.1145	.1112			
.555			-.6014					
.600							.0724	
.637		.0905						
.650						.1074		
.670								-.0180
.700					.0929			
.725				.1226				
.750						.3232	.1857	
.760			.1429					

DATE 10 FEB 76 TABULATED PRESSURE DATA - OA148 (AMES 11-073-1)

AMES 11-073(OA148) -140A/B/C ORB LEFT WING BOT (XEBL79)

ALPHA (5) = 11.959 BETA (1) = -3.847

SECTION : 1)LEFT WING BOT SURF DEPENDENT VARIABLE CP

2Y/BW	.2990	.3640	.4270	.5340	.6730	.7800	.8870	.9720
X/CW								
.775				.4272	.2399			
.798		.1331						
.808			.2446					
.834	.0539							
.839		.1218						
.850				-.0504	-.1035	-.0808		
.857			-.0490					
.862								-.2692
.865	.2617							
.879		-.0973						
.900	-.1530			-.2257			-.2051	
.905			-.2555					
.919		-.2899						
.950				-.3488	-.2691	-.2430		
.953			-.3437					
.955		-.3444						
.965	-.3681							
1.000			-.1250		-.3797		-.6011	

ALPHA (5) = 11.976 BETA (2) = .196 MACH = .89890 Q = 599.14 P = 1059.2 RN/L = 3.5769

SECTION : 1)LEFT WING BOT SURF DEPENDENT VARIABLE CP

2Y/BW	.2990	.3640	.4270	.5340	.6730	.7800	.8870	.9720
X/CW								
.010	-.7019	-.4087	-.0085	.5520	.5319	.4837	.4212	
.020	.0000	-.2129	.2620	.5361	.5245	.5098	.4431	-.6063
.040		-.1137	.4170					
.060	-.1209			.4612	.4583	.4347	.3900	
.069								-.3809
.080				.3981				
.081			.3903					
.086		.1946						
.094	.0155							
.100				.3255	.3393	.3322	.2392	
.107								-.2188
.153		.3765						
.177			.3244					
.229	.1709							
.246		.2639						
.250				.2708	.2643	.2505	.1672	
.271			.2741					
.295								-.1110
.330		.2578						

AMES 11-073(OA148) -142A/P/C ORB LEFT WING BOT (XEBL79)

ALPHA (5) = 11.976 BETA (2) = 19[illegible]

SECTION (1)LEFT WING BOT SURF DEPEN VARIABLE CP

2Y/BW	.2990	.3640	.4270	.5340	.6[illegible]	[illegible]00	.8870	.9720
X/CW								
.400				.1938			.1053	
.402			.2213					
.503								-.1305
.550				.0974				
.565			-.5808					
.600							.0426	
.637		.0832						
.650						[illegible]70		
.670								-.0676
.700								
.725				.1122				
.750						.2964	.1598	
.760			.1284					
.775				.4117	.2216			
.798		.1262						
.809			.2382					
.834	.0437							
.839		.1231						
.85[illegible]				-.0575	-.1221	-.0957		
.857			-.0561					
.862								-.3392
.865	.2501							
.879		-.0921						
.900	-.1377			-.2362			-.2257	
.905			-.2587					
.919		-.2826						
.950				-.3543	-.2862	-.25[illegible]7		
.953			-.3489					
.955		-.3417						
.965	-.3805							
1.000			-.1532		-.3517		-.6268	

ALPHA (5) = 11.956 BETA (3) = 4.265 MACH = .89890 Q = 599.14 P = 1059.2 RN/L = 3.5769

SECTION (1)LEFT WING BOT SURF DEPENDENT VARIABLE CP

2Y/BW	.2990	.3640	.4270	.5340	.6730	.7800	.8870	.9720
X/CW								
.010	-.7867	-.3726	-.2168	.4380	.4290	.3555	.2975	
.020	.0000	-.3049	.0962	.4673	.4538	.4291	.3610	-.7585
.040		-.2144	.3248					
.050	-.2063			.4162	.4149	.3840	.3408	
.069								-.4935
.080				.3631				

C-7

AMES 11-073(OA148) -140A/B/C ORB LEFT WING BOT (XEBL79)

ALPHA (5) = 11.956 BETA (3) = 4.265

SECTION (1)LEFT WING BOT SURF DEPENDENT VARIABLE CP

2Y/BW	.2990	.3640	.4270	.5340	.6730	.7800	.8670	.9720
X/CW								
.081			.3424					
.086		.1096						
.094	-.0650							
.150				.2971	.3110	.2980	.2028	
.157								-.2676
.163		.3195						
.177			.3006					
.229	.1122							
.246		.2487						
.250				.2455	.2385	.2203	.1337	
.274			.2530					
.345								-.1807
.390		.2416						
.400				.1740	.1753		.0707	
.402			.1982					
.503								-.1815
.550				.0835	.0757			
.565			-.3998					
.600							.0058	
.637		.0668						
.650						.0600		
.670								-.1191
.700					.0597			
.725				.0924				
.750						.2592	.1229	
.760			.1204					
.775				.3812	.1925			
.798		.1144						
.808			.2210					
.834	.0325							
.839		.1149						
.850				-.0755	-.1480	-.1181		
.857			-.0603					
.862								-.3994
.865	.2426							
.879		-.0819						
.900	-.1247			-.2555			-.2406	
.905			-.2548					
.919		-.2768						
.950				-.3596	-.3065	-.2734		
.953			-.3458					
.955		-.3356						
.965	-.3554							
1.000			-.2325		-.3156		-.6734	

AMES 11-073(OA148) -140A/B/C ORB LEFT WING BOT (XE8LB0) (05 AUG 75)

REFERENCE DATA

SREF = 2690.0000 SQ.FT. XMRP = 1076.6800 IN. XO
LREF = 474.8000 IN. YMRP = .0000 IN. YO
BREF = 936.0680 IN. ZMRP = 375.0000 IN. ZO
SCALE = .0300

PARAMETRIC DATA

RUDDER = -10.000 SPOBRK = .000
BDFLAP = -11.700 L-ELVN = 10.000
R-ELVN = -10.000 MACH = .600

ALPHA (1) = -4.078 BETA (1) = -7.858 MACH = .59728 Q = 595.86 P = 2386.0 RN/L = 4.8298

SECTION (1)LEFT WING BOT SURF DEPENDENT VARIABLE CP

2Y/BW	.2990	.3640	.4270	.5340	.6730	.7800	.8870	.9720
X/CW								
.010	-.3062	-.6537	-1.0711	-2.1428	-2.0982	-1.8055	-1.9554	
.020	.0000	-.5776	-1.1473	-1.9848	-2.0199	-1.4842	-1.8224	-.8119
.040		-.5233	-.9707					
.050	-.2548			-.9423	-.9709	-1.1010	-1.0191	
.069								-.6957
.080				-.7085				
.081			-.6145					
.086		-.3449						
.094	-.2271							
.150				-.4466	-.4531	-.5095	-.4477	
.157								-.2758
.163		-.3821						
.177			-.3815					
.229	-.1899							
.246		-.3757						
.250				-.2936	-.3176	-.3331	-.3080	
.274			-.2697					
.345								-.2386
.390		-.2392						
.400				-.1913	-.1894		-.1900	
.402			-.1763					
.503								-.2114
.550				-.1680	-.1544			
.566			-.2094					
.600							-.1115	
.637		-.1969						
.650						-.0752		
.670								-.1367
.700					-.0812			
.725				-.0495				
.750						.0773	-.0027	
.760			-.0409					
.775				.1107	.0518			
.795		-.0353						
.809			.0149					
.83-	-.1072							
.833		-.0662						
.850				-.1043	-.0950	-.1045		

AMES 11-073(OA148) -140A/B/C ORB LEFT WING BOT (XEBL80)

ALPHA (1) = -4.078 BETA (1) = -7.858

SECTION (1)LEFT WING BOT SURF DEPENDENT VARIABLE CP

2Y/BW	.2990	.3640	.4270	.5340	.6730	.7800	.8870	.9720
X/CW								
.857			-.1229					
.862								-.1509
.865	-.0152							
.879		-.1694						
.900	-.2175			-.1373			-.1030	
.905			-.1697					
.919		-.1940						
.950				-.0832	-.0556	-.0550		
.953			-.1007					
.955		-.1473						
.965	-.1785							
1.000			.0106		-.0109		.0521	

ALPHA (1) = -4.062 BETA (2) = -3.836 MACH = .59728 Q = 595.85 P = 2386.0 RN/L = 4.8298

SECTION (1)LEFT WING BOT SURF DEPENDENT VARIABLE CP

2Y/BW	.2990	.3640	.4270	.5340	.6730	.7800	.8870	.9720
X/CW								
.010	-.2053	-.4478	-.8050	-2.0130	-2.0789	-1.9872	-1.9690	
.020	.0000	-.3863	-.8859	-1.6972	-1.8730	-1.5961	-1.8169	-.7222
.040		-.3589	-.7695					
.050	-.1828			-.8699	-.8993	-.9784	-.9371	
.069								-.6224
.090				-.6468				
.081			-.5255					
.086		-.2375						
.094	-.1700							
.150				-.4042	-.4277	-.4441	-.4138	
.157								-.2538
.163		-.2891						
.177			-.3485					
.229	-.1373							
.246		-.3270						
.250				-.2724	-.3015	-.3097	-.2945	
.274			-.2542					
.345								-.2081
.390		-.2218						
.400				-.1826	-.1809		-.1783	
.402			-.1700					
.503								-.1913
.550				-.1620	-.1509			
.565			-.1955					
.600							-.0990	

AMES 11-073(OA148) -140A/B/C ORB LEFT WING BOT (XEBL80)

ALPHA (1) = -4.062 BETA (2) = -3.836

SECTION (1)LEFT WING BOT SURF DEPENDENT VARIABLE CP

2Y/BW	.2990	.3640	.4270	.5340	.6730	.7800	.8870	.9720
X/CW								
.637		-.1887						
.650						-.0719		
.670								-.1261
.700					-.0801			
.725				-.0467				
.750						.0833	.0017	
.760			-.0324					
.775				.1328	.0541			
.798		-.0333						
.808			.0296					
.834	-.0946							
.839		-.0698						
.850				-.1065	-.1035	-.1078		
.857			-.1231					
.862								-.1410
.865	.0026							
.879		-.1686						
.900	-.2051			-.1462			-.1082	
.905			-.1771					
.919		-.1921						
.950				-.0900	-.0633	-.0665		
.953			-.1088					
.955		-.1579						
.965	-.1764							
1.000			.0115		-.0091		.0522	

ALPHA (1) = -4.061 BETA (3) = .183 MACH = .59728 Q = 595.86 P = 2386.0 RN/L = 4.8298

SECTION (1)LEFT WING BOT SURF DEPENDENT VARIABLE CP

2Y/BW	.2990	.3640	.4270	.5340	.6730	.7800	.8870	.9720
X/CW								
.010	-.1093	-.2473	-.5613	-1.7819	-1.8556	-2.1420	-1.9045	
.020	.0000	-.2189	-.6229	-1.3560	-1.5193	-1.6013	-1.7257	-.6394
.040		-.2009	-.5929					
.050	-.1123			-.7632	-.8319	-.8797	-.8796	
.069								-.5307
.080				-.5820				
.081			-.4430					
.096		-.1387						
.094	-.1103							
.150				-.3707	-.3947	-.4100	-.3970	
.157								-.2424
.163		-.2027						

DATE 10 FEB 76 TABULATED PRESSURE DATA - OA148 (AMES 11-073-1)

AMES 11-073(OA148) -140A/B/C ORB LEFT WING BOT (XEBLBO)

ALPHA (1) = -4.061 BETA (3) = .183

SECTION (1)LEFT WING BOT SURF DEPENDENT VARIABLE CP

2Y/BW	.2990	.3640	.4270	.5340	.6730	.7800	.8870	.9720
X/CW								
.177			-.3053					
.229	-.0846							
.246		-.2767						
.250				-.2499	-.2858	-.2912	-.2716	
.274			-.2291					
.345								-.1822
.390		-.2025						
.400				-.1741	-.1761		-.1657	
.402			-.1659					
.503								-.1711
.550				-.1603	-.1473			
.565			-.1723					
.600							-.0925	
.637		-.1866						
.650						-.0645		
.670								-.1134
.700					-.0727			
.725				-.0461				
.750						.1007	.0138	
.760			-.0292					
.775				.1440	.0610			
.798		-.0340						
.808			.0307					
.834	-.0945							
.839		-.0637						
.850				-.1132	-.1242	-.1128		
.857			-.1282					
.862								-.1311
.865	.0213							
.879		-.1619						
.900	-.1958			-.1487			-.1076	
.905			-.1773					
.919		-.1912						
.950				-.0953	-.0746	-.0765		
.953			-.1200					
.955		-.1560						
.965	-.1706							
1.000			.0076		.0049		.0366	

AMES 11-073(OA148) -140A/B/C ORB LEFT WING BOT (XE8L80)

ALPHA (1) = -3.963 BETA (4) = 4.258 MACH = .59728 Q = 595.86 P = 2386.0 RN/L. = 4.8298

SECTION (1)LEFT WING BOT SURF DEPENDENT VARIABLE CP

2Y/BW	.2990	.3640	.4270	.5340	.6730	.7800	.8870	.9720
X/CW								
.010	-.0535	-.1026	-.3550	-1.4081	-1.5242	-1.8353	-1.6002	
.020	.0000	-.0902	-.4060	-1.1280	-1.2091	-1.2734	-1.4466	-.4785
.040		-.0752	-.4284					
.050	-.0667			-.6507	-.7081	-.7665	-.7705	
.069								-.3547
.080				-.4922				
.081			-.3491					
.086		-.0625						
.094	-.0632							
.150				-.3216	-.3463	-.3561	-.3521	
.157								-.2102
.163		-.1298						
.177			-.2629					
.229	-.0519							
.246		-.2239						
.250				-.2251	-.2509	-.2587	-.2453	
.274			-.2065					
.345								-.1462
.390		-.1798						
.400				-.1658	-.1572		-.1481	
.402			-.1557					
.503								-.1422
.550				-.1523	-.1356			
.565			-.1886					
.600							-.0810	
.637		-.1735						
.650						-.0590		
.670								-.1003
.700					-.0676			
.725				-.0383				
.750						.1079	.0178	
.760			-.0283					
.775				.1635	.0570			
.798		-.0362						
.808			.0331					
.834	-.0896							
.839		-.0540						
.850				-.1122	-.1256	-.1132		
.857			-.1213					
.862								-.1274
.865	.0066							
.879		-.1520						
.900	-.1822			-.1512			-.1173	
.905			-.1777					
.919		-.1888						

AMES 11-073(OA148) -140A/B/C ORB LEFT WING BOT (XE8L80)

ALPHA (1) = -3.963 BETA (4) = 4.258

SECTION (1)LEFT WING BOT SURF DEPENDENT VARIABLE CP

2Y/BW	.2990	.3640	.4270	.5340	.6730	.7800	.8870	.9720
X/CW								
.950				-.1025	-.0779	-.0834		
.953			-.1163					
.955		-.1562						
.965	-.1669							
1.000			.0034		.0142		.0178	

ALPHA (1) = -3.995 BETA (5) = 8.327 MACH = .59728 Q = 595.86 P = 2386.0 RN/L = 4.8298

SECTION (1)LEFT WING BOT SURF DEPENDENT VARIABLE CP

2Y/BW	.2990	.3640	.4270	.5340	.6730	.7800	.8870	.9720
X/CW								
.010	-.0304	.0018	-.1332	-1.0333	-1.2051	-1.4707	-1.3534	
.020	.0000	.0004	-.1901	-.8565	-.9303	-1.0393	-1.2270	-.3786
.040		.0101	-.2553					
.050	-.0403			-.5010	-.5914	-.6645	-.6832	
.069								-.2830
.080				-.3973				
.081			-.2574					
.086		.0058						
.094	-.0393							
.150				-.2668	-.2970	-.3074	-.3150	
.157								-.1864
.163		-.0606						
.177			-.2114					
.229	-.0242							
.246		-.1762						
.250				-.1945	-.2237	-.2290	-.2229	
.274			-.1738					
.345								-.1256
.390		-.1558						
.400				-.1488	-.1405		-.1286	
.402			-.1412					
.503								-.1209
.550				-.1400	-.1230			
.565			-.2286					
.600							-.0704	
.637		-.1682						
.650						-.0523		
.670								-.0915
.700					-.0597			
.725				-.0399				
.750						.1112	.0236	
.760			-.0241					

AMES 11-073(OA148) -140A/B/C ORB LEFT WING BOT (XE8L80)

ALPHA (1) = -3.995 BETA (5) = 8.327

SECTION (1)LEFT WING BOT SURF DEPENDENT VARIABLE CP

2Y/BW	.2990	.3640	.4270	.5340	.6730	.7800	.8870	.9720
X/CW								
.775				.1738	.0567			
.798		-.0298						
.808			.0312					
.934	-.0832							
.839		-.0404						
.850				-.1067	-.1290	-.1098		
.857			-.1051					
.862								-.1262
.865	.0339							
.879		-.1350						
.900	-.1590			-.1455			-.1133	
.905			-.1563					
.919		-.1728						
.950				-.0969	-.0803	-.0835		
.953			-.1098					
.955		-.1399						
.965	-.1460							
1.000			-.0035		.0129		.0170	

ALPHA (2) = -.053 BETA (1) = -7.896 MACH = .59646 Q = 594.33 P = 2386.5 RN/L = 4.8222

SECTION (1)LEFT WING BOT SURF DEPENDENT VARIABLE CP

2Y/BW	.2990	.3640	.4270	.5340	.6730	.7800	.8870	.9720
X/CW								
.010	-.0142	-.0420	-.1505	-.8813	-.8684	-.7922	-.5921	
.020	.0000	-.0700	-.2856	-.8100	-.6849	-.7054	-.6580	-.1297
.040		-.0681	-.3728					
.050	-.0538			-.4854	-.4617	-.4742	-.4330	
.069								-.1261
.090				-.3792				
.081			-.2967					
.086		-.0467						
.094	-.0720							
.150				-.2263	-.2139	-.2044	-.1964	
.157								-.1445
.163		-.1235						
.177			-.1999					
.229	-.0588							
.246		-.1954						
.250				-.1435	-.1559	-.1565	-.1410	
.274			-.1434					
.345								-.0844
.390		-.1240						

AMES 11-073(OA148) -140A/B/C ORB LEFT WING BOT (XEBL80)

ALPHA (2) = -.053 BETA (1) = -7.896

SECTION (1)LEFT WING BOT SURF DEPENDENT VARIABLE CP

2Y/BW	.2990	.3640	.4270	.5340	.6730	.7800	.8870	.9720
X/CW								
.400				-.1033	-.0957		-.0868	
.402			-.0881					
.503								-.1110
.550				-.1100	-.0945			
.565			-.2743					
.600							-.0524	
.637		-.1456						
.650						-.0270		
.670								-.0767
.700					-.0423			
.725				-.0107				
.750						.1495	.0395	
.760			-.0133					
.775				.1789	.1000			
.798		-.0069						
.808			.0576					
.834	-.0744							
.839		-.0443						
.850				-.0897	-.0934	-.0935		
.857			-.1025					
.862								-.1673
.865	.0398							
.879		-.1481						
.900	-.1907			-.1315			-.1092	
.905			-.1637					
.919		-.1819						
.950				-.0852	-.0522	-.0594		
.953			-.0990					
.955		-.1422						
.965	-.1695							
1.000			.0227		.0096		.0367	

ALPHA (2) = -.008 BETA (2) = -3.854 MACH = .59646 Q = 594.33 P = 2386.5 RN/L = 4.8222

SECTION (1)LEFT WING BOT SURF DEPENDENT VARIABLE CP

2Y/BW	.2990	.3640	.4270	.5340	.6730	.7800	.8870	.9720
X/CW								
.010	.0364	.0299	-.0090	-.6820	-.7202	-.6445	-.4874	
.020	.0030	.0055	-.1314	-.6612	-.5721	-.5744	-.5600	-.1274
.040		.0123	-.2446					
.050	-.0304			-.4096	-.4082	-.4169	-.3940	
.059								-.1243
.060				-.3225				

AMES 11-073(OA148) -140A/B/C ORB LEFT WING BOT (XE8L80)

ALPHA (2) = -.008 BETA (2) = -3.854

SECTION (1)LEFT WING BOT SURF DEPENDENT VARIABLE CP

2Y/BW	.2990	.3640	.4270	.5340	.6730	.7800	.8870	.9720
X/CW								
.081			-.2307					
.086		.0172						
.094	-.0401							
.150				-.1989	-.1928	-.1777	-.1824	
.157								-.1484
.163		-.0604						
.177			-.1676					
.229	-.0287							
.246		-.1518						
.250				-.1288	-.1452	-.1487	-.1404	
.274			-.1220					
.345								-.0865
.390		-.1074						
.400				-.0953	-.0888		-.0840	
.402			-.0863					
.503								-.1140
.550				-.1110	-.0949			
.565			-.2319					
.600							-.0536	
.637		-.1351						
.650						-.0326		
.670								-.0889
.700					-.0473			
.725				-.0159				
.750						.1485	.0359	
.760			-.0050					
.775				.1875	.0955			
.799		-.0042						
.808			.0624					
.834	-.0705							
.839		-.0380						
.850				-.0951	-.1075	-.1019		
.857			-.1024					
.862								-.1772
.865	.0577							
.879		-.1457						
.900	-.1860			-.1438			-.1126	
.905			-.1704					
.919		-.1830						
.950				-.0911	-.0633	-.0695		
.953			-.1087					
.955		-.1492						
.965	-.1647							
1.000			.0154		.0028		.0347	

AMES 11-073(OA148) -140A/B/C ORB LEFT WING BOT (XEBL80)

ALPHA (2) = .029 BETA (3) = .176 MACH = .59646 Q = 594.33 P = 2386.5 RN/L = 4.8222

SECTION (1)LEFT WING BOT SURF DEPENDENT VARIABLE CP

2Y/BW	.2930	.3640	.4270	.5340	.6730	.7800	.8870	.9720
X/CW								
.010	.0002	.0536	.0893	-.4991	-.5759	-.5147	-.4137	
.020	.0000	.0419	-.0118	-.5056	-.4742	-.4739	-.4932	-.1380
.040		.0569	-.1407					
.050	-.0107			-.3224	-.3445	-.3627	-.3530	
.069								-.1371
.080				-.2672				
.081			-.1721					
.066		.0562						
.094	-.0236							
.150				-.1754	-.1690	-.1672	-.1795	
.157								-.1553
.163		-.0181						
.177			-.1369					
.229	-.0045							
.245		-.1283						
.250				-.1201	-.1353	-.1343	-.1383	
.274			-.1118					
.345								-.0929
.390		-.1004						
.400				-.0955	-.0870		-.0880	
.402			-.0841					
.503								-.1207
.550				-.1065	-.0913			
.555			-.2119					
.600							-.0557	
.637		-.1375						
.650						-.0341		
.670								-.1068
.700					-.0463			
.725				-.0173				
.750						.1428	.0280	
.760			-.0039					
.775				.1911	.0839			
.798		-.0077						
.808			.0609					
.834	-.0718							
.839		-.0339						
.850				-.0982	-.1177	-.1044		
.857			-.1099					
.862								-.1864
.865	.0557							
.879		-.1417						
.900	-.1835			-.1512			-.1162	
.905			-.1773					
.919		-.1941						

AMES 11-073(OA148) -140A/B/C ORB LEFT WING BOT (XEBLBO)

ALPHA (2) = .029 BETA (3) = .176

SECTION (1)LEFT WING BOT SURF DEPENDENT VARIABLE CP

2Y/BW	.2990	.3640	.4270	.5340	.6730	.7800	.8870	.9720
X/CW								
.950				-.1024	-.0838	-.0828		
.953			-.1220					
.955		-.1582						
.955	-.1637							
1.000			.0017		.0048		.0322	

ALPHA (2) = .052 BETA (4) = 4.239 MACH = .59646 Q = 594.33 P = 2386.5 RN/L = 4.8222

SECTION (1)LEFT WING BOT SURF DEPENDENT VARIABLE CP

2Y/BW	.2990	.3640	.4270	.5340	.6730	.7800	.8870	.9720
X/CW								
.010	-.0279	.0388	.1481	-.3581	-.4441	-.3730	-.2738	
.020	.0000	.0506	.0786	-.3785	-.3592	-.3819	-.3708	-.1425
.040		.0642	-.0570					
.050	-.0201			-.2496	-.2713	-.2780	-.2696	
.069								-.1569
.080				-.2104				
.081			-.1123					
.086		.0804						
.094	-.0191							
.150				-.1463	-.1420	-.1371	-.1580	
.157								-.1484
.163		.0226						
.177			-.1097					
.229	-.0016							
.246		-.0978						
.250				-.1081	-.1178	-.1251	-.1259	
.274			-.1005					
.345								-.0986
.390		-.0785						
.400				-.0910	-.0749		-.0837	
.402			-.0729					
.503								-.1284
.550				-.0997	-.0909			
.565			-.2350					
.600							-.0591	
.637		-.1271						
.650						-.0323		
.670								-.1265
.700					-.0458			
.775				-.0182				
.750						.1364	.0268	
.760			-.0029					

AMES 11-073(OA148) -140A/B/C ORB LEFT WING BOT (XEBLBO)

ALPHA (2) = .052 BETA (4) = 4.239

SECTION (1)LEFT WING BOT SURF DEPENDENT VARIABLE CP

2Y/BW	.2990	.3640	.4270	.5340	.6730	.7800	.8870	.9720
X/CW								
.775				.1981	.0778			
.799		-.0074						
.808			.0652					
.834	-.0675							
.839		-.0351						
.850				-.1004	-.1249	-.1072		
.857			-.1078					
.862								
.865	.0395							-.1898
.879		-.1311						
.900	-.1612			-.1532				
.905			-.1676			-.1203		
.919		-.1755						
.950				-.1061	-.0850	-.0888		
.953			-.1187					
.955		-.1520						
.965	-.1537							
1.000			-.0053		.0041		.0285	

ALPHA (2) = .006 BETA (5) = 8.284 MACH = .59646 Q = 594.33 P = 2386.5 RN/L = 4.8222

SECTION (1)LEFT WING BOT SURF DEPENDENT VARIABLE CP

2Y/BW	.2990	.3640	.4270	.5340	.6730	.7800	.8870	.9720
X/CW								
.010	-.1136	-.0401	.1827	-.1667	-.2836	-.2593	-.2139	
.020	.0000	.0033	.1441	-.2304	-.2463	-.2841	-.2750	-.1730
.040		.0308	.0256					
.050	-.0522			-.1633	-.1953	-.2315	-.2359	
.069								-.1879
.080				-.1455				
.081			-.0559					
.086		.0808						
.094	-.0387							
.150				-.1176	-.1229	-.1243	-.1456	
.157								-.1645
.163		.0568						
.177			-.0791					
.229	-.0107							
.246		-.0712						
.250				-.0937	-.1069	-.1093	-.1219	
.274			-.0791					
.345								
.390		-.0695						-.1209

DATE 10 FEB 76 TABULATED PRESSURE DATA - OA148 (AMES 11-073-1)

AMES 11-073(OA148) -140A/B/C ORB LEFT WING BOT (XE8L80)

ALPHA (2) = .006 BETA (5) = 8.284

SECTION (1)LEFT WING BOT SURF DEPENDENT VARIABLE CP

2Y/BW	.2990	.3640	.4270	.5340	.6730	.7800	.8870	.9720
X/CW								
.400				-.0865	-.0754		-.0848	
.402			-.0732					-.1484
.503				-.0986	-.0815			
.550			-.2705				-.0588	
.565								
.600		-.1270				-.0320		
.637								-.1466
.650					-.0402			
.670				-.0218				
.700						.1247	.0258	
.725			-.0028					
.750				.1926	.0678			
.760		-.0090						
.775			.0579					
.798								
.808	-.0640							
.834		-.0331		-.0960	-.1247	-.1017		
.839			-.1025					-.2017
.850								
.857								
.862	.0463							
.865		-.1253		-.1438			-.1219	
.879	-.1473		-.1625					
.900								
.905		-.1675		-.1088	-.0869	-.0918		
.919			-.1215					
.950		-.1489						
.953								
.955	-.1494		-.0225		.0021		.0299	
.965								
1.000								

ALPHA (3) = 3.903 BETA (1) = -7.902 MACH = .59628 Q = 593.97 P = 2386.5 RN/L = 4.8207

SECTION (1)LEFT WING BOT SURF DEPENDENT VARIABLE CP

2Y/BW	.2990	.3640	.4270	.5340	.6730	.7800	.8870	.9720
X/CW								
.010	.0774	.1402	.3229	.0210	.0504	.2179	.2800	
.020	.0000	.1402	.2312	-.0868	.0223	.0618	.1263	-.0022
.040		.1557	.0415					
.050	.0559			-.0693	-.0424	.0009	.0464	
.069								-.0123
.080				-.0717				

AMES 11-073(OA148) -140A/B/C ORB LEFT WING BOT (XEBL80)

ALPHA (3) = 3.903 BETA (1) = -7.902

SECTION (1)LEFT WING BOT SURF DEPENDENT VARIABLE CP

2Y/BW	.2990	.3640	.4270	.5340	.6730	.7800	.8870	.9720
X/CW								
.081			-.0233					
.086		.1579						
.094	.0434							
.150				-.0269	-.0012	.0239	.0160	
.157								-.0979
.163		.0856						
.177			-.0152					
.229	.0476							
.246		-.0255						
.250				-.0031	-.0063	-.0043	-.0022	
.274			-.0134					
.345								-.0223
.390		-.0078						
.400				-.0097	.0084		.0045	
.402			.0006					
.503								-.0585
.550				-.0435	-.0260			
.565			-.2879					
.600							-.0062	
.637		-.0803						
.650						.0228		
.670								-.0655
.700					-.0056			
.725				.0229				
.750						.1836	.0764	
.760			.0238					
.775				.2290	.1312			
.798		.0272						
.808			.0890					
.834	-.0420							
.839		-.0117						
.851				-.0658	-.0780	-.0767		
.857			-.0763					
.862								-.2117
.865	.0880							
.879		-.1233						
.900	-.1651			-.1264			-.1160	
.905			-.1463					
.919		-.1639						
.950				-.0790	-.0471	-.0654		
.953			-.0897					
.955		-.1348						
.965	-.1505							
1.000			.0264		.0059		-.0335	

AMES 11-073(OA148) -140A/B/C ORB LEFT WING BOT (XE8L80)

ALPHA (3) = 3.907 BETA (2) = -3.866 MACH = .59628 Q = 593.97 P = 2386.5 RN/L = 4.8207

SECTION (1)LEFT WING BOT SURF DEPENDENT VARIABLE CP

2Y/BW	.2990	.3640	.4270	.5340	.6730	.7800	.8870	.9720
X/CW								
.010	.0074	.0553	.3235	.1014	.1102	.2476	.2892	
.020	.0000	.1022	.2678	-.0143	.0598	.0967	.1446	-.1090
.040		.1335	.1029					
.050	.0395			-.0238	-.0055	.0371	.0517	
.069								-.0897
.080				-.0290				
.081			.0143					
.085		.1599						
.094	.0367							
.150				-.0096	.0166	.0310	.0109	
.157								-.1232
.163		.1147						
.177			-.0015					
.229	.0539							
.246		-.0099						
.250				-.0002	.0025	.0002	-.0019	
.274			-.0049					
.345								-.0670
.390		-.0039						
.400				-.0105	.0067		-.0021	
.402			-.0015					
.503								-.0895
.550				-.0397	-.0308			
.565			-.2505					
.600							-.0151	
.637		-.0797						
.650						.0162		
.670								-.0937
.700					-.0048			
.725				.0270				
.750						.1767	.0638	
.760			.0316					
.775				.2323	.1210			
.798		.0288						
.808			.0883					
.834	-.0407							
.839		-.0094						
.850				-.0767	-.0937	-.0864		
.857			-.0863					
.862								-.2275
.865	.0914							
.879		-.1232						
.900	-.1652			-.1314			-.1206	
.905			-.1567					
.919		-.1671						

AMES 11-073(OA148) -140A/B/C ORB LEFT WING BOT (XE8L80)

ALPHA (3) = 3.907 BETA (2) = -3.866

SECTION (1)LEFT WING BOT SURF DEPENDENT VARIABLE CP

2Y/BW	.2990	.3640	.4270	.5340	.6730	.7800	.8870	.9720
X/CW								
.950				-.0887	-.0662	-.0791		
.953			-.1060					
.955		-.1422						
.965	-.1529							
1.000			.0058		-.0010		-.0151	

ALPHA (3) = 3.984 BETA (3) = .180 MACH = .59628 Q = 593.97 P = 2386.5 RN/L = 4.8207

SECTION (1)LEFT WING BOT SURF DEPENDENT VARIABLE CP

2Y/BW	.2990	.3640	.4270	.5340	.6730	.7800	.8870	.9720
X/CW								
.010	-.0959	-.0676	.2936	.1687	.1525	.2605	.2772	
.020	.0000	.0316	.2827	.0523	.0970	.1192	.1550	-.2286
.040		.0735	.1526					
.050	.0005			.0189	.0197	.0428	.0553	
.063								-.1873
.080				-.0053				
.081			.0551					
.096		.1485						
.094	.0162							
.150				-.0031	.0101	.0338	-.0044	
.157								-.1592
.163		.1356						
.177			.0128					
.229	.0443							
.246		.0027						
.250				.0048	.0035	.0025	-.0196	
.274			.0029					
.345								-.1163
.390		.0006						
.400				-.0071	.0059		-.0172	
.402			-.0021					
.533								-.1361
.550				-.0471	-.0317			
.565			-.2382					
.600							-.0254	
.637		-.0905						
.650						.0053		
.670								-.1310
.700					-.0039			
.725				.0190				
.750						.1578	.0460	
.760			.0258					

AMES 11-073(OA148) -140A/B/C ORB LEFT WING BOT (XE8L80)

ALPHA (3) = 3.984 BETA (3) = .180

SECTION (1)LEFT WING BOT SURF DEPENDENT VARIABLE CP

2Y/BW	.2990	.3640	.4270	.5340	.6730	.7800	.8870	.9720
X/CW								
.775				.2332	.1109			
.798		.0271						
.808			.0918					
.834	-.0384							
.839		-.0088						
.850				-.0789	-.0992	-.0864		
.857			-.0868					
.862								-.2548
.865	.0835							
.879		-.1195						
.900	-.1532			-.1394			-.1257	
.905			-.1634					
.919		-.1672						
.950				-.1067	-.0819	-.0864		
.953			-.1194					
.955		-.1444						
.955	-.1518							
1.000			-.0220		-.0005		-.0068	

ALPHA (3) = 3.989 BETA (4) = 4.226 MACH = .59628 Q = 593.97 P = 2386.5 RN/L = 4.8207

SECTION (1)LEFT WING BOT SURF DEPENDENT VARIABLE CP

2Y/BW	.2990	.3640	.4270	.5340	.6730	.7800	.8870	.9720
X/CW								
.010	-.2244	-.2359	.2194	.2047	.1721	.2609	.2611	
.020	.0000	-.0767	.2513	.0892	.1252	.1458	.1598	-.3920
.040		-.0200	.1651					
.050	-.0594			.0489	.0392	.0601	.0719	
.069								-.3096
.080				.0154				
.081			.0682					
.086		.1113						
.094	-.0260							
.150				.0010	.0248	.0250	-.0035	
.157								-.2092
.163		.1363						
.177			.0195					
.229	.0252							
.246		.0177						
.250				-.0001	.0020	-.0042	-.0264	
.274			.0062					
.345								-.1683
.390		.0059						

AMES 11-073(OA148) -140A/B/C ORB LEFT WING BOT (XE8L80)

ALPHA (3) = 3.988 BETA (4) = 4.226

SECTION (1)LEFT WING BOT SURF DEPENDENT VARIABLE CP

2Y/BW	.2990	.3640	.4270	.5340	.6730	.7800	.8870	.9720
X/CW								
.400				-.0164	-.0008		-.0337	
.402			-.0016					
.503								-.1943
.550				-.0472	-.0397			
.565			-.2511					
.600							-.0380	
.637		-.0792						
.650						-.0028		
.670								-.1637
.700					-.0116			
.725				.0090				
.750						.1502	.0364	
.760			.0211					
.775				.2303	.0911			
.799		.0178						
.809			.0881					
.834	-.0461							
.839		-.0094						
.850				-.0864	-.1085	-.0873		
.857			-.0910					
.862								-.2702
.865	.0730							
.879		-.1142						
.900	-.1461			-.1426			-.1308	
.905			-.1570					
.919		-.1647						
.950				-.1257	-.0906	-.0934		
.953			-.1248					
.955		-.1440						
.955	-.1508							
1.000			-.0335		-.0118		-.0096	

ALPHA (3) = 4.029 BETA (5) = 8.276 MACH = .59628 Q = 593.97 P = 2386.5 RN/L = 4.8207

SECTION (1)LEFT WING BOT SURF DEPENDENT VARIABLE CP

2Y/BW	.2990	.3640	.4270	.5340	.6730	.7800	.8870	.9720
X/CW								
.010	-.3749	-.3608	.0894	.2428	.1991	.2432	.2277	
.020	.0000	-.1931	.1782	.1533	.1482	.1556	.1515	-.5519
.040		-.1336	.1644					
.050	-.1355			.0854	.0848	.0676	.0691	
.069								-.4292
.080				.0469				

AMES 11-073(OA148) -140A/B/C ORB LEFT WING BOT (XEBL80)

ALPHA (3) = 4.029 BETA (5) = 8.276

SECTION (1)LEFT WING BOT SURF DEPENDENT VARIABLE CP

2Y/BW	.2990	.3640	.4270	.5340	.6730	.7800	.8870	.9720
X/CW								
.081			.0935					
.086		.0515						
.094	-.0804							
.150				.0172	.0287	.0356	-.0232	
.157								-.2677
.163		.1278						
.177			.0386					
.229	-.0038							
.246		.0200						
.250				.0123	.0010	-.0045	-.0445	
.274			.0130					
.345								-.2247
.390		.0137						
.400				-.0173	-.0070		-.0464	
.402			-.0061					
.503								-.2467
.550				-.0516	-.0422			
.565			-.2962					
.600							-.0537	
.637		-.0734						
.650						-.0095		
.670								-.2092
.700					-.0148			
.725				.0038				
.750						.1292	.0250	
.760			.0237					
.775				.2020	.0792			
.793		.0183						
.808			.0776					
.834	-.0405							
.839		-.0050						
.850				-.0860	-.1246	-.1017		
.857			-.0890					
.862								-.2897
.865	.0824							
.879		-.1070						
.900	-.1312			-.1408			-.1391	
.905			-.1488					
.919		-.1601						
.950				-.1187	-.1061	-.1116		
.953			-.1114					
.955		-.1394						
.965	-.1432							
1.000			-.0158		-.0523		-.0279	

AMES 11-073(OA148) -140A/B/C ORB LEFT WING BOT (XE8L80)

ALPHA (4) = 7.903 BETA (1) = -7.896 MACH = .59626 Q = 593.85 P = 2386.1 RN/L = 4.8197

SECTION (1)LEFT WING BOT SURF DEPENDENT VARIABLE CP

2Y/BW	.2990	.3640	.4270	.5340	.6730	.7800	.8870	.9720
X/CW								
.010	-.0310	-.0778	.3889	.4778	.5023	.5706	.5420	
.020	.0000	.0904	.4301	.3508	.4243	.4609	.4750	-.3409
.040		.1517	.3138					
.050	.0889			.2324	.2839	.3233	.3451	
.069								-.1816
.080				.1888				
.081			.2035					
.086		.2561						
.094	.0985							
.150				.1525	.1839	.2105	.1850	
.157								-.1355
.163		.2464						
.177			.1368					
.229	.1290							
.246		.1187						
.250				.1290	.1375	.1442	.1218	
.274			.1124					
.345								-.0390
.390		.1027						
.400				.0901	.1037		.0847	
.402			.0975					
.503								-.0715
.550				.0277	.0420			
.565			-.3057					
.600							.0414	
.637		-.0158						
.650						.0671		
.670								-.0455
.700					.0420			
.725				.0665				
.750						.2124	.1064	
.760			.0641					
.775				.2648	.1568			
.798		.0600						
.808			.1266					
.934	-.0115							
.839		.0230						
.850				-.0388	-.0558	-.0556		
.857			-.0467					
.862								
.875	.1266							-.2597
.879		-.0062						
.900	-.1279			-.1036			-.1239	
.905			-.1263					
.919		-.1344						

AMES 11-073(OA148) -140A/B/C ORB LEFT WING BOT (XEBLBO)

ALPHA (4) = 7.903 BETA (1) = -7.896

SECTION (1)LEFT WING BOT SURF DEPENDENT VARIABLE CP

2Y/BW	.2990	.3640	.4270	.5340	.6730	.7800	.8870	.9720
X/CW								
.950				-.0822	-.0497	-.0809		
.953			-.0818					
.955		-.1097						
.965	-.1284							
1.000			.0125		.0082		-.1281	

ALPHA (4) = 7.912 BETA (2) = -3.851 MACH = .59626 Q = 593.85 P = 2386.1 RN/L = 4.8197

SECTION (1)LEFT WING BOT SURF DEPENDENT VARIABLE CP

2Y/BW	.2990	.3640	.4270	.5340	.6730	.7800	.8870	.9720
X/CW								
.010	-.1866	-.3141	.2691	.4676	.4721	.5056	.4574	
.020	.0000	-.0490	.3685	.3566	.4107	.4319	.4254	-.5609
.040		.0294	.3141					
.050	.0176			.2491	.2832	.3046	.3149	
.069								-.3469
.080				.1920				
.081			.2147					
.086		.2062						
.094	.0533							
.150				.1491	.1899	.1995	.1560	
.157								-.1955
.163		.2446						
.177			.1432					
.229	.1048							
.246		.1210						
.250				.1248	.1250	.1351	.0956	
.274			.1139					
.315								-.1175
.390		.0963						
.400				.0783	.0966		.0651	
.402			.0902					
.503								-.1398
.550				.0232	.0374			
.565			-.2676					
.600							.0202	
.637		-.0170						
.650						.0547		
.670								-.0999
.700					.0358			
.725				.0569				
.750						.1973	.0885	
.760			.0651					

AMES 11-073(OA148) -140A/B/C ORB LEFT WING BOT (XE8L80)

ALPHA (4) = 7.912 BETA (2) = -3.851

SECTION (1)LEFT WING BOT SURF DEPENDENT VARIABLE CP

2Y/BW	[illegible]	.3640	.4270	.5340	.6730	.7800	.8870	.9720
X/CW								
[illegible]				.2664	.1448			
[illegible]		.0604						
[illegible]			.1297					
[illegible]	-.0059							
[illegible]		.0216						
[illegible]				-.0458	-.0730	-.0611		
[illegible]			-.0522					
[illegible]								-.2908
.865	.1235							
.879		-.0857						
.900	-.1260			-.1144			-.1335	
.905			-.1355					
.919		-.1372						
[illegible]				-.0995	-.0697	-.0953		
.953			-.0957					
.935		-.1146						
.965	-.1218							
1.000			.0020		-.0119		-.1071	

ALPHA (4) = 8.059 BETA (3) = .184 MACH = .59626 Q = 593.85 P = 2386.1 RN/L = 4.8197

SECTION (1)LEFT WING BOT SURF DEPENDENT VARIABLE CP

2Y/BW	.2990	.3640	.4270	.5340	.6730	.7800	.8870	.9720
X/CW								
.010	-.3868	-.5646	.1079	.4313	.4228	.4175	.3581	
.020	.0000	-.2210	.2690	.3548	.3793	.3904	.3579	-.8019
[illegible]		-.1226	.2893					
[illegible]	-.0586			.2605	.2728	.2902	.2774	
[illegible]								-.5134
[illegible]				.1988				
[illegible]			.2078					
[illegible]		.1338						
[illegible]	-.0074							
[illegible]				.1434	.1754	.1835	.1295	
[illegible]								-.2538
[illegible]		.2270						
.177			.1435					
[illegible]	.0695							
[illegible]		.1133						
[illegible]				.1137	.1221	.1203	.0756	
[illegible]			.1079					
[illegible]								-.2037
[illegible]		.0928						

AMES 11-073(OA148) -140A/B/C ORB :EFT WING BOT (XEBL80)

ALPHA (4) = 8.059 BETA (3) = .184

SECTION (1)LEFT WING BOT SURF DEPENDENT VARIABLE CP

2Y/BW	.2990	.3640	.4270	.5340	.6730	.7800	.8870	.9720
X/CW								
.400				.0700	.0829		.0371	
.402			.0795					
.503								-.2167
.550				.0169	.0284			
.565			-.2680					
.600							-.0050	
.637		-.0228						
.650						.0390		
.670								-.1500
.700					.0270			
.725				.0546				
.750						.1790	.0647	
.760			.0548					
.775				.2616	.1298			
.738		.0554						
.809			.1195					
[illegible]	-.0103							
.833		.0191						
.850				-.0541	-.0916	-.0805		
.857			-.0545					
.862								-.3126
.865	.1163							
.873		-.0974						
.900	-.1252			-.1213			-.1500	
.905			-.1347					
.919		-.1446						
.950				-.1063	-.0911	-.1124		
.953			-.0370					
.955		-.1253						
.955	-.1323							
1.000			-.0043		-.0552		-.1467	

ALPHA (4) = 8.016 BETA (4) = 4.233 MACH = .59626 Q = 593.85 P = 2386.1 RN/L = 4.8197

SECTION (1)LEFT WING BOT SURF DEPENDENT VARIABLE CP

2Y/BW	.2990	.3640	.4270	.5340	.6730	.7800	.8870	.9720
X/CW								
.010	-.5592	-.6922	-.0705	.3684	.3596	.3079	.2340	
.020	.0000	-.3525	.1392	.3236	.3409	.3411	.2939	-1.0731
.010		-.2479	.2436					
.050	-.1591			.2449	.2739	.2651	.2465	
.089								-.6929
.080				.1851				

DATE 10 FEB 75 TABULATED PRESSURE DATA - OA148 (AMES 11-073-1)

AMES 11-073(OA148) -140A/B/C ORB LEFT WING BOT (XE8L80)

ALPHA (4) = 8.016 BETA (4) = 4.233

SECTION (11)LEFT WING BOT SURF DEPENDENT VARIABLE CP

2Y/BW	.0000	.3540	.4270	.5240	.6730	.7800	.8870	.9720
X/CW								
.081								
.086			.1931					
.094		.0584						
.150	-.0722							
.157				.1339	.1616	.1766	.0960	
.163								-.3307
.177		.1989						
.229			.1325					
.245	.0307							
.255		.1052						
.274				.1017	.1093	.1081	.0518	
.345			.0996					
.390								-.2820
.400		.0921						
.402				.0591	.0809			
.523			.0703				.0148	
.550								
.565				.0100	.0181			-.2850
.600			-.2793					
.637		-.0234					-.0234	
.650								
.670						.0319		
.700								
.725					.0247			-.2039
.750				.0467				
.760								
.775			.0578			.1613	.0507	
.798				.2574	.1194			
.808		.0542						
.834	-.0145		.1202					
.839								
.850		.0235						
.857				-.0554	-.0933	-.0841		
.862			-.0559					
.865	.1099							-.3351
.879		-.0800						
.900	-.1160							
.905				-.1098			-.1617	
.919			-.1240					
.940		-.1302						
.943				-.0843	-.0813	-.1281		
.955			-.0978					
.965		-.1229						
1.000	-.1334							
			.0002		-.0201		-.1665	

AMES 11-073(OA148) -140A/B/C ORB LEFT WING BOT (XEBL80)

ALPHA (4) = 8.043 BETA (5) = 8.283 MACH = .59626 Q = 593.85 P = 2385.1 RN/L = 4.8197

SECTION (1)LEFT WING BOT SURF DEPENDENT VARIABLE CP

2Y/BW	.2990	.3640	.4270	.5340	.6730	.7800	.8870	.9720
X/CW								
.010	-.7552	-.6493	-.2892	.2727	.2757	.1758	.1100	
.020	.0000	-.4[illegible]	-.0202	.2849	.2881	.2724	.2052	-1.2850
.040		-.3415	.1748					
.050	-.2617			.2289	.2517	.2343	.1938	
.069								-.8721
.080				.1778				
.091			.1701					
.095		-.0264						
.094	-.1566							
.110				.1234	.1532	.1493	.0640	
.157								-.3941
.163		.1552						
.177			.1316					
.229	-.0112							
.246		.0893						
.250				.0964	.1052	.0877	.0233	
.274			.0919					
.345								-.3625
.300		.0905						
.400				.0495	.0600		-.0198	
.402			.0602					
.[illegible]								-.3490
.550				.0085	.0071			
.565			-.3113					
.600							-.0455	
.637		-.0292						
.650						.0146		
.670								-.2487
.700					.0134			
.725				.0412				
.750						.1380	.0226	
.760			.0557					
.775				.2341	.1000			
.748		.0499						
.808			.1110					
.834	-.0084							
.839		.0253						
.850				-.0591	-.0943	-.0897		
.857			-.0601					
.872								-.3581
.875	.1194							
.879		-.0803						
.[illegible]	-.1000			-.1102			-.1798	
.905			-.1119					
.919		-.1374						

AMES 11-073(OA148) -140A/B/C ORB LEFT WING BOT (XEBL80)

ALPHA (4) = 8.043 BETA (5) = 8.283

SECTION (1)LEFT WING BOT SURF DEPENDENT VARIABLE CP

2Y/BW	.2990	.3640	.4270	.5340	.6730	.7800	.8870	.9720
X/CW								
.950				-.0846	-.0765	-.1362		
.953			-.0967					
.955		-.1282						
.965	-.1264							
1.000			-.0095		-.0353		-.1915	

ALPHA (5) = 11.974 BETA (1) = -7.860 MACH = .59650 Q = 594.19 P = 2385.7 RN/L = 4.8199

SECTION (1)LEFT WING BOT SURF DEPENDENT VARIABLE CP

2Y/BW	.2990	.3640	.4270	.5340	.6730	.7800	.8870	.9720
X/CW								
.010	-.3247	-.6794	.1054	.5870	.5882	.5008	.4221	
.020	.0000	-.1781	.3697	.5612	.5981	.5893	.5238	-.8837
.040		-.0511	.4483					
.050	.0458			.4534	.5029	.5070	.4896	
.069								-.4743
.080				.3836				
.081			.3688					
.086		.2580						
.094	.1151							
.150				.3000	.3460	.3656	.3057	
.157								-.2094
.163		.3668						
.177			.2800					
.229	.1879							
.246		.2493						
.250				.2560	.2654	.2701	.2227	
.274			.2333					
.345								-.0748
.390		.2078						
.400				.1856	.2008		.1632	
.402			.1857					
.503								-.1003
.550				.1086	.1193			
.565			-.3015					
.600							.0873	
.637		.0627						
.650						.1180		
.673								-.0533
.700					.0923			
.725				.1153				
.750						.2430	.1396	
.760			.1092					

AMES 11-073(OA148) -140A/B/C ORB LEFT WING BOT (XEBL80)

ALPHA (5) = 11.974 BETA (1) = -7.860

SECTION (1)LEFT WING BOT SURF DEPENDENT VARIABLE CP

2Y/BW	.2930	.3640	.4270	.5340	.6730	.7800	.8870	.9720
X/CW								
.775				.3086	.1933			
.788		.1071						
.829			.1724					
.834	.0316							
.839		.0672						
.850				-.0005	-.0263	-.0236		
.857			-.0016					
.862							-.2926	
.865	.1730							
.879		-.0545						
.900	-.0891			-.0700		-.1386		
.905			-.0855					
.919		-.1002						
.940				-.0555	-.0406	-.0988		
.943			-.0507					
.955		-.0851						
.965	-.0955							
1.000			.0142		.0165		-.2825	

ALPHA (5) = 11.993 BETA (2) = -3.842 MACH = .59650 Q = 594.19 P = 2385.7 RN/L = 4.8199

SECTION (1)LEFT WING BOT SURF DEPENDENT VARIABLE CP

2Y/BW	.2930	.3640	.4270	.5340	.6730	.7800	.8870	.9720
X/CW								
.010	-.5654	-.9106	-.1187	.4872	.4880	.3526	.2759	
.020	.0000	-.3526	.2182	.5080	.5275	.5078	.4254	-1.1233
.040		-.2139	.3916					
.050	-.0629			.4309	.4773	.4650	.4295	
.069								-.6599
.080				.3649				
.081			.3446					
.096		.1657						
.094	.0419							
.150				.2861	.3277	.3427	.2631	
.157								-.2815
.163		.3339						
.177			.2697					
.229	.1437							
.246		.2349						
.250				.2389	.2474	.2490	.1894	
.274			.2206					
.345								-.1735
.390		.1959						

AMES 11-073(OA148) -140A/B/C ORB LEFT WING BOT (XE8L80)

ALPHA (5) = 11.993 BETA (2) = -3.842

SECTION (1)LEFT WING BOT SURF DEPENDENT VARIABLE CP

2Y/BW	.2990	.3640	.4270	.5340	.6730	.7800	.8870	.9720
X/CW								
.400				.1689	.1855		.1295	
.402			.1752					
.503								-.1992
.550				.0960	.1060			
.565			-.2756					
.600							.0561	
.637		.0534						
.650						.1016		
.670								-.1114
.700					.0848			
.725				.1062				
.750						.2242	.1162	
.760			.1062					
.775				.3110	.1792			
.798		.1025						
.808			.1669					
.834	.0288							
.839		.0639						
.850				-.0049	-.0408	-.0363		
.857			-.0091					
.862								-.3369
.865	.1655							
.879		-.0484						
.900	-.0868			-.0715			-.1550	
.905			-.0891					
.919		-.1024						
.950				-.0536	-.0486	-.1171		
.953			-.0597					
.955		-.0903						
.955	-.1065							
1.000			.0265		.0084		-.2870	

ALPHA (5) = 12.035 BETA (3) = .179 MACH = .59650 Q = 594.19 P = 2385.7 RN/L = 4.8199

SECTION (1)LEFT WING BOT SURF DEPENDENT VARIABLE CP

2Y/BW	.2990	.3640	.4270	.5340	.6730	.7800	.8870	.9720
X/CW								
.010	-.7954	-1.1290	-.3482	.3717	.3759	.1928	.1163	
.020	.0000	-.5459	.0487	.4402	.4460	.4125	.3153	-1.3447
.040		-.3754	.3162					
.050	-.1791			.3943	.4292	.4108	.3577	
.069								-.8401
.080				.3573				

AMES 11-073(OA148) -1404/B/C ORB LEFT WING BOT (XE8L80)

ALPHA (5) = 12.035 BETA (3) = .179

SECTION 1 LEFT WING BOT SURF DEPENDENT VARIABLE CP

2Y/BW	.2990	.3540	.4270	.5340	.6730	.7800	.8870	.9720
X/CW								
.021			.3150					
.038		.0690						
.034	-.0465							
.150				.2662	.3026	.3057	.2201	
.157								-.3502
.163		.2897						
.172			.2546					
.209	.0957							
.243		.2120						
.270				.2199	.2294	.2202	.1556	
.304			.2084					
.321								-.2627
.340		.1979						
.470				.1558	.1637		.0903	
.473			.1646					
.614								-.2730
.620				.0852	.0893			
.643			-.2700					
.650							.0265	
.647		.0476						
.660						.0838		
.670								-.1674
.712					.0684			
.725				.0973				
.750						.1990	.0875	
.760			.0999					
.777				.3033	.1550			
.796		.0937						
.813			.1672					
.834	.0276							
.839		.0632						
.850				-.0155	-.0583	-.0531		
.857			-.0160					
.888								-.3539
.895	.1614							
.913		-.0486						
.911	-.0867			-.0829			-.1748	
.925			-.0937					
.919		-.1108						
.951				-.0677	-.0583	-.1262		
.953			-.0733					
.955		-.1032						
.958	-.1097							
[illegible]			-.0084		-.0086		-.3024	

AMES 11-073(OA148) -140A/B/C ORB LEFT WING BOT (XE8L60)

ALPHA (5) = 12.027 BETA (4) = 4.242 MACH = .59650 Q = 594.19 P = 2385.7 RN/L = 4.8199

SECTION (1)LEFT WING BOT SURF DEPENDENT VARIABLE CP

2Y/BW	.2990	.3840	.4270	.5340	.6730	.7800	.8870	.9720
X/CW								
.010	-.9948	-.9549	-.5598	.2291	.2363	.0062	-.0814	
.020	.0000	-.6119	-.1251	.3419	.3481	.2978	.1811	-1.5623
.040		-.4688	.2161					
.050	-.3050			.3444	.3711	.3473	.2818	
.069								-1.0045
.080				.3021				
.081			.2584					
.086		-.0201						
.094	-.1429							
.150				.2354	.2723	.2745	.1793	
.157								-.3959
.163		.2347						
.177			.2295					
.229	.0408							
.246		.1748						
.250				.1934	.2097	.2013	.1214	
.274			.1949					
.345								-.3378
.390		.1691						
.400				.1381	.1478		.0607	
.402			.1470					
.533								-.3336
.550				.0777	.0833			
.565			-.2925					
.600							.0088	
.637		.0401						
.650						.0668		
.670								-.2229
.700					.0526			
.725				.0893				
.750						.1730	.0605	
.760			.0910					
.775				.2864	.1283			
.778		.0910						
.808			.1574					
.834	.0228							
.839		.0595						
.850				-.0207	-.0656	-.0585		
.857			-.0200					
.862								-.3607
.865	.1619							
.879		-.0473						
.900	-.0815			-.0975			-.1777	
.905			-.0962					
.919		-.1107						

AMES 11-073(OA148) -140A/B/C ORB LEFT WING BOT (XE8L80)

ALPHA (5) = 12.027 BETA (4) = 4.242

SECTION (1)LEFT WING BOT SURF DEPENDENT VARIABLE CP

2Y/BW	.2990	.3640	.4270	.5340	.6730	.7800	.8870	.9720
X/CW								
.950				-.0908	-.0600	-.1299		
.953			-.0833					
.955		-.1076						
.965	-.1111							
1.000			.0001		-.0300		-.2573	

ALPHA (5) = 12.061 BETA (5) = 8.297 MACH = .59650 Q = 594.19 P = 2385.7 RN/L = 4.8199

SECTION (1)LEFT WING BOT SURF DEPENDENT VARIABLE CP

2Y/BW	.2990	.3640	.4270	.5340	.6730	.7800	.8870	.9720
X/CW								
.010	-1.2601	-.7389	-.7767	.0633	.0678	-.2059	-.2812	
.020	.0000	-.6591	-.3143	.2366	.2339	.1716	.0473	-1.7332
.040		-.5419	.1142					
.050	-.4420			.2807	.3133	.2726	.1876	
.059								-1.1770
.080				.2527				
.091			.2119					
.095		-.1099						
.094	-.2430							
.150				.2014	.2364	.2414	.1241	
.157								-.4738
.153		.1703						
.177			.2048					
.229	-.0076							
.246		.1366						
.250				.1674	.1766	.1723	.0788	
.274			.1692					
.345								-.4159
.390		.1397						
.400				.1171	.1318		.0345	
.402			.1254					
.503								-.4006
.550				.0621	.0685			
.545			-.3128					
.600							-.0168	
.637		.0316						
.650						.0465		
.670								-.2751
.700					.0405			
.725				.0693				
.750						.1473	.0323	
.760			.0843					

AMES 11-073(OA148) -140A/B/C ORB LEFT WING BOT (XEBL80)

ALPHA (5) = 12.061 BETA (5) = 8.297

SECTION (1)LEFT WING BOT SURF DEPENDENT VARIABLE CP

2Y/Bw	.2990	.3640	.4270	.5340	.6730	.7800	.8870	.9720
X/CW								
.775				.2692	.1137			
.798		.0799						
.808			.1469					
.834	.0182							
.839		.0610						
.850				-.0276	-.0764	-.0693		
.857			-.0315					
.862								-.3641
.865	.1592							
.879		-.0459						
.900	-.0681			-.1014			-.1760	
.905			-.1022					
.919		-.1060						
.950				-.0964	-.0886	-.1405		
.953			-.1043					
.955		-.1143						
.955	-.1107							
1.000			-.0220		-.0655		-.2095	

AMES 11-073(OA148) -140A/B/C ORB LEFT WING BOT (XEBLB1) (05 AUG 75)

REFERENCE DATA

SREF = 2690.0000 SQ.FT. XMRP = 1076.6800 IN. XO
LREF = 474.8000 IN. YMRP = .0000 IN. YO
BREF = 936.0680 IN. ZMRP = 375.0000 IN. ZO
SCALE = .0300

PARAMETRIC DATA

RUDDER = 10.000 SPDBRK = .000
BDFLAP = -11.700 L-ELVN = -10.000
R-ELVN = 10.000 MACH = 1.400

ALPHA (1) = -3.955 BETA (1) = .178 MACH = 1.3929 Q = 599.69 P = 441.59 RN/L = 2.9281

SECTION (1)LEFT WING BOT SURF DEPENDENT VARIABLE CP

2Y/BW	.2990	.3640	.4270	.5340	.6730	.7800	.8870	.9720
X/CW								
.010	-.0997	-.1195	-.0564	-.2821	-.3851	-.2672	-.2487	
.020	.0000	-.1226	-.1275	-.4195	-.4265	-.4486	-.4446	-.5139
.040		-.1202	-.1907					
.050	-.1023			-.4368	-.4499	-.4787	-.4752	
.069								-.5281
.080				-.3968				
.091			-.1600					
.1[illegible]		-.0585						
.1[illegible]	-.1056							
.150				-.3018	-.4064	-.4229	-.4344	
.157								-.3187
.163		.0095						
.177			-.1376					
.229	-.0839							
.246		-.0795						
.250				-.1662	-.3623	-.3790	-.4071	
.274			-.1381					
.345								-.4760
.390		-.1091						
.400				-.1498	-.1638		-.3589	
.402			-.1227					
.503								-.3680
.550				-.1161	-.1469			
.565			-.3226					
.600							-.3353	
.637		-.0660						
.650						-.2080		
.670								-.5575
.700					-.1792			
.725				-.1747				
.750						-.3976	-.5479	
.760			-.1485					
.775				-.5536	-.3067			
.798		-.1157						
.[illegible]			-.4734					
.8[illegible]	-.1369							
.839		-.3598						
.850				-.4728	-.4259	-.4958		

AMES 11-073(OA148) -140A/B/C ORB LEFT WING BOT (XEBL81)

ALPHA (1) = -3.065 BETA (1) = .178

SECTION (1)LEFT WING BOT SURF DEPENDENT VARIABLE CP

2Y/BW	.2990	.3640	.4270	.5340	.6730	.7800	.8870	.9720
X/CW								
.857			-.4722					
.862								-.6305
.865	-.4114							
.879		-.4063						
.900	-.3217			-.4736			-.4151	
.905			-.4534					
.919		-.4328						
.950				-.3179	-.5302	-.2796		
.953			-.3091					
.955		-.2934						
.965	-.4558							
1.000			-.2419		-.2664		-.3059	

ALPHA (2) = .028 BETA (1) = .177 MACH = 1.3894 Q = 599.62 P = 443.71 RN/L = 2.9315

SECTION (1)LEFT WING BOT SURF DEPENDENT VARIABLE CP

2Y/BW	.2990	.3640	.4270	.5340	.6730	.7800	.8870	.9720
X/CW								
.010	-.0270	-.0068	.2429	-.0867	-.2062	-.1470	-.0712	
.020	.0000	-.0152	.2194	-.1889	-.2338	-.2650	-.2954	-.2559
.040		-.0041	.0672					
.050	-.0300			-.1152	-.1912	-.2720	-.3072	
.060								-.2670
.080				-.1102				
.081			.0022					
.085		.0404						
.094	-.0428							
.150				-.0821	-.1378	-.1827	-.2231	
.157								-.1857
.163		.1132						
.177			-.0195					
.223	-.0500							
.246		.0085						
.253				-.0464	-.0657	-.1154	-.1949	
.274			-.0241					
.345								-.1229
.393		-.0195						
.400				-.0421	-.0457		-.0807	
.422			-.0320					
.503								-.0976
.550				-.0267	-.0382			
.555			-.3859					
.600							-.0822	

AMES 11-073(OA148) -140A/B/C ORB LEFT WING BOT (XE8L81)

ALPHA (2) = .028 BETA (1) = .177

SECTION (1)LEFT WING BOT SURF DEPENDENT VARIABLE CP

2Y/BW	.2990	.3640	.4270	.5340	.6730	.7800	.8870	.9720
X/CW								
.637		.0108						
.650						-.1028		
.670								-.3963
.700					-.1036			
.725				-.1061				
.750						-.3644	-.4123	
.760			-.1108					
.775				-.5089	-.3087			
.798		-.1004						
.809			-.4335					
.834	-.1183							
.839		-.3751						
.850				-.4413	-.3651	-.4573		
.857			-.4390					
.862								-.3934
.868	-.3901							
.875		-.3960						
.880	-.2880			-.4674			-.4917	
.905			-.4706					
.918		-.3936						
.940				-.2591	-.4124	-.2853		
.953			-.2565					
.955		-.2595						
.955	-.4284							
1.000			-.2023		-.2303		-.2535	

ALPHA (3) = 3.945 BETA (1) = -3.872 MACH = 1.3917 Q = 599.67 P = 442.30 RN/L = 2.9225

SECTION (1)LEFT WING BOT SURF DEPENDENT VARIABLE CP

2Y/BW	.2990	.3640	.4270	.5340	.6730	.7800	.8870	.9720
X/CW								
.010	.0444	.0082	.3994	.2553	.1800	.1740	.2117	
.020	.0000	.0339	.3792	.1749	.1655	.0821	.0335	.0852
.040		.0498	.2140					
.050	.0364			.0488	.0174	.0155	.0270	
.069								.0485
.080				.0476				
.081			.1269					
.086		.1053						
.094	.0281							
.150				.0457	.0531	.0674	.0753	
.157								-.0667
.163		.1995						

DATE 10 FEB 76 TABULATED PRESSURE DATA - OA149 (AMES 11-073-1)

AMES 11-073(OA149) -140A/B/C ORB LEFT WING BOT (XEBL81)

ALPHA (3) = 3.945 BETA (1) = -3.872

SECTION (1)LEFT WING BOT SURF DEPENDENT VARIABLE CP

2Y/BW	.2930	.3600	.4270	.5340	.6730	.7600	.8870	.9720
X/CW								
.177			.0832					
.229	.0209							
.246		.0776						
.250				.0685	.0674	.0809	.0591	
.274			.0676					
.345								.0265
.350		.0667						
.400				.0603	.0770		.0552	
.402			.0603					
.503								-.0042
.550				.0629	.0749			
.555			-.4049					
.600							.0076	
.637		.0780						
.650						.0198		
.670								-.3716
.700					-.0234			
.725				-.0323				
.750						-.3135	-.3349	
.760			-.0601					
.775				-.4848	-.3212			
.799		-.0628						
.808			-.3774					
.834	-.0751							
.833		-.3577						
.850				-.4097	-.3202	-.4110		
.857			-.3945					
.862								-.3567
.865	-.3525							
.879		-.4008						
.900	-.2121			-.4423			-.4554	
.905			-.4533					
.919		-.3459						
.950				-.2742	-.3931	-.4723		
.963			-.2243					
.965		-.2329						
.985	-.3703							
1.000			-.1622		-.2654		-.3654	

AMES 11-073(OA148) -140A/B/C ORB LEFT WING BOT (XEBL81)

ALPHA (3) = 3.983 BETA (2) = .185 MACH = 1.3917 Q = 599.67 P = 442.30 RN/L = 2.9226

SECTION 1 LEFT WING BOT SURF DEPENDENT VARIABLE CP

2Y/BW	.2930	.3640	.4270	.5340	.6730	.7800	.8870	.9720
X/CW								
.010	-.0401	-.1567	.3489	.3119	.2070	.1967	.2059	
.020	.0000	-.0642	.3523	.2276	.1797	.1185	.0602	.0529
.040		-.0354	.2255					
.050	.0069			.1101	.0548	.0905	.0577	
.069								
.080				.0968				.0305
.091			.1426					
.095		.0600						
.094	.0081							
.150				.0715	.0826	.0929	.1066	
.167								
.163		.1795						-.0818
.177			.0959					
.229	.0009							
.243		.0887						
.250				.0846	.0833	.0905	.0645	
.274			.0877					
.345								.0039
.393		.0791						
.400				.0759	.0892		.0561	
.422			.0699					
.503								-.0192
.550				.0722	.0809			
.555			-.4185					
.600							.0109	
.627		.0892						
.650						.0082		
.677								-.4016
.7[illegible]					-.0249			
.7[illegible]				-.0283				
.7[illegible]						-.3218	-.3408	
.7[illegible]			-.0434					
.7[illegible]				-.4282	-.3179			
.7[illegible]		-.0515						
.769			-.3620					
.794	-.0555							
.820		-.3491						
.850				-.4012	-.3172	-.4125		
.857			-.3943					
.862								-.3975
.805	-.3421							
.879		-.3922						
.900	-.1971			-.4420			-.4654	
.905			-.4444					
.919		-.3305						

AMES 11-073(OA149) -140A/B/C ORB LEFT WING BOT (XEBLBI)

ALPHA (3) = 3.983 BETA (2) = .185

SECTION (1)LEFT WING BOT SURF DEPENDENT VARIABLE CP

2Y/BW	.2990	.3640	.4270	.5340	.6730	.7800	.8870	.9720
X/CW								
.950				-.2697	-.4056	-.4748		
.953			-.2251					
.955		-.3211						
.965	-.3971							
1.000			-.1653		-.2252		-.3149	

ALPHA (3) = 3.932 BETA (3) = 4.246 MACH = 1.3917 Q = 599.67 P = 442.30 RN/L = 2.9226

SECTION (1)LEFT WING BOT SURF DEPENDENT VARIABLE CP

2Y/BW	.2990	.3640	.4270	.5340	.6730	.7800	.8870	.9720
X/CW								
.010	-.1763	-.3916	.2580	.3404	.2370	.2209	.2453	
.020	.0000	-.2006	.2960	.2701	.2060	.1508	.1226	-.0067
.040		-.1565	.2290					
.050	-.0552			.1575	.1014	.1137	.1113	
.060								-.0069
.080				.1317				
.081			.1510					
.095		-.0193						
.094	-.0471							
.150				.0872	.1090	.1175	.1209	
.157								-.0963
.163		.1386						
.177			.0943					
.229	-.0278							
.246		.0812						
.250				.0992	.0949	.1033	.0767	
.274			.0991					
.345								-.0112
.390		.0861						
.400				.0876	.1152		.0738	
.402			.0840					
.503								-.0125
.550				.0763	.0901			
.555			-.4226					
.600							.0204	
.637		.0993						
.650						.0060		
[illegible]								-.4183
[illegible]					-.0135			
[illegible]				-.0195				
[illegible]						-.3302	-.3450	
.760			-.0356					

AMES 11-073(OA148) -140A/B/C ORB LEFT WING BOT (XEBLB1)

ALPHA (3) - 3.932 BETA (3) = 4.246

SECTION (1) LEFT WING BOT SURF DEPENDENT VARIABLE CP

2Y/BW	.2990	.3640	.4270	.5340	.6730	.7800	.8870	.9720
X/CW								
.775				-.4232	-.3110			
.799		-.0478						
.819			-.3585					
.874	-.0553							
.839		-.3440						
.850				-.3910	-.3057	-.4084		
.857			-.3951					
.863								-.4483
.875	-.3428							
.879		-.3586						
.900	-.1955			-.4423			-.4619	
.905			-.4342					
.919		-.3202						
.923				-.2547	-.3944	-.4594		
.953			-.2173					
.955		-.3479						
.955	-.4178							
1.000			-.1595		-.1931		-.2581	

ALPHA -1 = 7.903 BETA (1) = .179 MACH = 1.3906 Q = 599.65 P = 443.00 RN/L = 2.9159

SECTION (1) LEFT WING BOT SURF DEPENDENT VARIABLE CP

2Y/BW	.2990	.3640	.4270	.5340	.6730	.7800	.8870	.9720
X/CW								
.010	-.1411	-.3519	.2902	.5290	.4721	.5376	.5311	
.020	.0000	-.1317	.3609	.4236	.4192	.4370	.4192	.0182
.040		-.0805	.3253					
.050	.0192			.3142	.2935	.3311	.3682	
.063								.0584
.080				.2675				
.081			.2451					
.095		.0685						
.099	.0377							
.100				.1989	.2622	.2825	.2876	
.127								-.0544
.153		.2344						
.177			.1913					
.229	.0507							
.245		.1596						
.250				.2043	.2293	.2431	.2155	
.274			.1942					
.345								.0850
.390		.1733						

AMES 11-073(OA148) -140A/B/C ORB LEFT WING BOT (XE8LB1)

ALPHA (4) = 7.903 BETA (1) = .179

SECTION (1)LEFT WING BOT SURF DEPENDENT VARIABLE CP

2Y/BW	.2990	.3640	.4270	.5340	.6730	.7800	.8870	.9720
X/CW								
.400				.1915	.2361		.2097	
.402			.1749					
.503								.0712
.550				.1709	.1894			
.565			-.4645					
.600							.1034	
.637		.1760						
.650						.0940		
.670								-.3803
.700					.0617			
.725				.0516				
.750						-.2823	-.2993	
.760			.0339					
.775				-.4042	-.2713			
.798		.0282						
.808			-.3119					
.834	.0169							
.839		-.3370						
.850				-.3488	-.3866	-.3671		
.857			-.3472					
.862								-.4040
.865	-.2973							
.879		-.3704						
.900	-.1248			-.4006			-.4264	
.905			-.3991					
.919		-.2680						
.950				-.4418	-.4173	-.4402		
.953			-.3896					
.955		-.2936						
.965	-.3660							
1.000			-.1365		-.2309		-.3155	

ALPHA (5) = 11.905 BETA (1) = -3.868 MACH = 1.3983 Q = 599.44 P = 443.00 RN/L = 2.9079

SECTION (1)LEFT WING BOT SURF DEPENDENT VARIABLE CP

2Y/BW	.2990	.3640	.4270	.5340	.6730	.7800	.8870	.9720
X/CW								
.010	-.1117	-.2834	.3760	.6869	.6632	.7283	.7346	
.020	.0000	-.0383	.4924	.5767	.6059	.6296	.6475	.0794
.040		.0192	.4595					
.050	.1050			.4697	.4902	.5126	.5594	
.069								.1541
.080				.4031				

AMES 11-073(OA148) -140A/B/C ORB LEFT WING BOT (XEBLB1)

ALPHA (51) = 11.906 BETA (1) = -3.808

SECTION (1)LEFT WING BOT SURF DEPENDENT VARIABLE CP

2Y/BW	.2930	.3640	.4270	.5340	.6730	.7800	.8870	.9720
X/CW								
.081			.3774					
.095		.1836						
.094	.1269							
.150				.3494	.4125	.4434	.4472	
.157								.0035
.163		.3685						
.177			.3142					
.229	.1506							
.246		.2683						
.250				.3368	.3641	.4008	.3800	
.274			.3171					
.345								.1846
.390		.2879						
.400			-	.3087	.3827		.3650	
.402			.2896					
.503								.1809
.550				.2956	.3167			
.585			-.4714					
.600							.2267	
.637		.2775						
.650						.2032		
.670								-.3085
.700					.1630			
.725				.1461				
.750						-.2097	-.2364	
.770			.1262					
.775				-.4417	-.2064			
.799		.1160						
.808			-.2621					
.854	.1078							
.859		-.2941						
.850				-.3086	-.3477	-.3144		
.857			-.3020					
.862								-.3547
.865	-.2479							
.879		-.3313						
.900	-.0823			-.3565			-.3760	
.905			-.3698					
.919		-.2304						
.950				-.4107	-.3985	-.4017		
.953			-.3928					
.955		-.2466						
.965	-.2864							
1.000			-.1844		-.3487		-.3709	

AMES 11-073(OA148) -140A/B/C ORB LEFT WING (XE8L81)

ALPHA (5) = 11.888 BETA (2) = .169 MACH = 1.3903 Q = 59L +4 P = 443.00 RN/L = 2.9079

SECTION (1)LEFT WING BOT SURF DEPENDENT VARIABLE CP

2Y/BW	.2990	.3640	.4270	.5340	.6730	.7800	.8870	.9720
X/CW								
.010	-.2541	-.3912	.1953	.6316	.6253	.6736	.6736	
.020	.0000	-.1454	.3331	.5519	.5832	.6063	.6138	-.0768
.040		-.0820	.3848					
.050	.0290			.4592	.4803	.4983	.5375	
.069								.0460
.080				.3930				
.081			.3181					
.086		.1053						
.094	.0735							
.150				.3456	.4015	.4235	.4340	
.157								-.0344
.163		.2992						
.177			.2951					
.229	.1156							
.246		.2378						
.250				.3228	.3540	.3915	.3642	
.274			.3033					
.345								.1270
.390		.2751						
.400				.3092	.3666		.3439	
.402			.2852					
.503								.1200
.550				.2780	.3075			
.565			-.4815					
.600							.2005	
.637		.2770						
.650						.1952		
.670								-.3276
.700					.1550			
.725				.1476				
.750						-.2239	-.2495	
.760			.1305					
.775				-.4403	-.2119			
.798		.1198						
.809			-.2521					
.834	.1115							
.839		-.2711						
.850				-.2988	-.3560	-.3202		
[illegible]			-.2976					
.862								-.3998
[illegible]	-.2495							
.879		-.3127						
.900	-.0775			-.3591			-.3837	
.905			-.3527					
.913		-.2112						

AMES 11-073(OA148) -140A/B/C ORB LEFT WING BOT (XE8L81)

ALPHA (5) = 11.888 BETA (2) = .169

SECTION (1)LEFT WING BOT SURF DEPENDENT VARIABLE CP

2Y/BW	.2990	.3640	.4270	.5340	.6730	.7800	.8870	.9720
X/CW								
.950				-.3974	-.3819	-.3994		
.953			-.3377					
.955		-.2339						
.965	-.2887							
1.000			-.2074		-.3443		-.3951	

ALPHA (5) = 11.987 BETA (3) = 4.249 MACH = 1.3903 Q = 599.44 P = 443.00 RN/L = 2.9079

SECTION (1)LEFT WING BOT SURF DEPENDENT VARIABLE CP

2Y/BW	.2990	.3640	.4270	.5340	.6730	.7800	.8870	.9720
X/CW								
.010	-.3585	-.4570	-.0071	.5372	.5481	.5822	.5830	
.020	.0000	-.2482	.1749	.5028	.5299	.5573	.5633	-.2081
.040		-.1836	.2866					
.050	-.0475			.4244	.4487	.4689	.5054	
.069								-.0610
.080				.3665				
.081			.2566					
.085		.0220						
.094	.0127							
.150				.3156	.3760	.4096	.4246	
.157								-.0826
.163		.2305						
.177			.2542					
.229	.0662							
.246		.1947						
.250				.3014	.3413	.3805	.3542	
.274			.2798					
.345								.0845
.390		.2419						
.400				.2995	.3556		.3161	
.402			.2711					
.503								.0757
.550				.2689	.2858			
.565			-.4681					
.600							.1955	
.637		.2668						
.650						.1941		
.670								-.3322
.700					.1618			
.725				.1547				
.750						-.2307	-.2529	
.763			.1219					

AMES 11-073(OA148) -140A/B/C ORB LEFT WING BOT (XE8L81)

ALPHA (5) = 11.887 BETA (3) = 4.249

SECTION (1)LEFT WING BOT SURF DEPENDENT VARIABLE CP

2Y/BW	.2990	.3640	.4270	.5340	.6730	.7800	.8870	.9720
X/CW								
.775				-.4232	-.2120			
.798		.1121						
.808			-.2378					
.834	.1004							
.839		-.2658						
.850				-.2948	-.3542	-.3145		
.857			-.2927					
.862								-.4219
.865	-.2516							
.879		-.3047						
.900	-.1188			-.3564			-.3910	
.905			-.3554					
.919		-.2155						
.950				-.3951	-.3624	-.4059		
.953			-.3058					
.955		-.2344						
.965	-.2898							
1.000			-.2381		-.2919		-.4135	

ALPHA (6) = 15.870 BETA (1) = .160 MACH = 1.3887 Q = 599.91 P = 444.41 RN/L = 2.9068

SECTION (1)LEFT WING BOT SURF DEPENDENT VARIABLE CP

2Y/24	.2990	.3640	.4270	.5340	.6730	.7800	.8870	.9720
X/CW								
.010	-.3123	-.4107	.0999	.6719	.6962	.7079	.6924	
.020	.0000	-.1614	.3004	.6426	.6871	.7118	.7072	-.1553
.040		-.0875	.4332					
.050	.0448			.5752	.6196	.6460	.6690	
.069								.0192
.080				.5174				
.091			.3922					
.086		.1403						
.094	.1065							
.150				.4657	.5336	.5913	.5565	
.157								-.0334
.163		.3748						
.177			.3987					
.229	.1735							
.246		.3233						
.250				.4425	.5072	.5463	.4861	
.274			.4120					
.345								.1763
.390		.3830						

AMES 11-073(OA148) -140A/B/C ORB LEFT WING BOT (XEBL81)

ALPHA (6) = 15.870 BETA (1) = .160

SECTION (1)LEFT WING BOT SURF DEPENDENT VARIABLE CP

2Y/BW	.2990	.3740	.4270	.5340	.6730	.7800	.8870	.9720
X/CW								
.400				.4524	.5050		.4278	
.402			.4052					
.503								.1592
.550				.4167	.4104			
.565			-.5167					
.600							.2793	
.637		.4052						
.650						.2667		
.670								-.2850
.700					.2432			
.725				.2318				
.750						-.1792	-.2080	
.760			.2069					
.775				-.4109	-.1691			
.798		.1995						
.808			-.1977					
.834	.1865							
.839		-.2448						
.850				-.2599	-.3319	-.2716		
.857			-.2605					
.882								-.3721
.885	-.2105							
.879		-.2897						
.900	-.1067			-.3212			-.3472	
.905			-.3196					
.919		-.2061						
.950				-.3599	-.3612	-.3688		
.953			-.3252					
.955		-.1984						
.965	-.1573							
1.000			-.4102		-.3317		-.5395	

AMES 11-073(OA148) -140A/B/C ORB LEFT WING BOT (XE8L82) (05 AUG 75)

REFERENCE DATA

SREF = 2000.0000 SQ.FT. XMRP = 1076.6800 IN. XO
LREF = 474.8000 IN. YMRP = .0000 IN. YO
BREF = 936.0680 IN. ZMRP = 375.0000 IN. ZO
SCALE = .0300

PARAMETRIC DATA

RUDDER = 10.000 SPDBRK = .000
BDFLAP = -11.700 L-ELVN = -10.000
R-ELVN = 10.000 MACH = 1.250

ALPHA (1) = -4.001 BETA (1) = .172 MACH = 1.2466 Q = 600.03 P = 551.58 RN/L = 3.0277

SECTION (1)LEFT WING BOT SURF DEPENDENT VARIABLE CP

2Y/BW	.2990	.3640	.4270	.5340	.6730	.7800	.8870	.9720
X/CW								
.010	-.1035	-.1334	-.0888	-.4106	-.5407	-.4071	-.3848	
.020	.0000	-.1433	-.1364	-.5636	-.5819	-.6081	-.6076	-.6746
.040		-.1341	-.2100					
.050	-.1208			-.5324	-.6039	-.6393	-.6373	
.069								-.7005
.080				-.5039				
.081			-.1929					
.086		-.0750						
.094	-.1216							
.150				-.2854	-.5164	-.5594	-.5812	
.157								-.3949
.163		.0023						
.177			-.1620					
.229	-.0911							
.246		-.1003						
.250				-.1927	-.3949	-.5040	-.5391	
.274			-.1513					
.345								-.6465
.370		-.1177						
.400				-.1474	-.1787		-.4745	
.402			-.1228					
.503								-.5872
.540				-.1199	-.1412			
.555			-.4374					
.600							-.3025	
.637		-.0716						
.650						-.1995		
.670								-.6651
.700					-.1966			
.725				-.2017				
.750						-.4593	-.5860	
.750			-.1257					
.775				-.6853	-.3589			
.799		-.1104						
.805			-.5908					
.834	-.1361							
.839		-.4815						
.850				-.5611	-.5154	-.5742		

AMES 11-073(OA148) -140A/B/C ORB LEFT WING BOT (XE8L82)

ALPHA (1) = -4.001 BETA (1) = .172

SECTION (1)LEFT WING BOT SURF DEPENDENT VARIABLE CP

2Y/BW	.2990	.3640	.4270	.5340	.6730	.7800	.8870	.9720
X/CW								
.857			-.5664					
.862								-.5649
.865	-.5090							
.879		-.5106						
.900	-.4065			-.5679			-.4602	
.905			-.5430					
.919		-.5217						
.950				-.3819	-.6436	-.3161		
.953			-.3584					
.966		-.3769						
.965	-.5683							
1.000			-.2808		-.3153		-.2283	

ALPHA (2) = .004 BETA (1) = .171 MACH = 1.2457 Q = 599.87 P = 552.28 RN/L = 3.0295

SECTION (1)LEFT WING BOT SURF DEPENDENT VARIABLE CP

2Y/BW	.2990	.3640	.4270	.5340	.6730	.7800	.8870	.9720
X/CW								
.010	-.0427	.0001	.2685	-.1711	-.3178	-.2612	-.1817	
.020	.0000	-.0094	.2308	-.1989	-.2944	-.3902	-.4330	-.3393
.040		.0018	.0494					
.050	-.0556			-.1791	-.2883	-.3732	-.4327	
.069								-.3238
.080				-.1530				
.081			-.0080					
.086		.0455						
.094	-.0722							
.150				-.1020	-.1611	-.2429	-.3272	
.157								-.2027
.153		.1217						
.177			-.0353					
.229	-.0579							
.246		-.0118						
.250				-.0564	-.0841	-.0846	-.1167	
.274			-.0261					
.345								-.1070
.390		-.0101						
.400				-.0292	-.0309		-.0891	
.402			-.0217					
.503								-.1355
.550				-.0186	-.0284			
.565			-.4792					
.600							-.0881	

AMES 11-073(OA148) -140A/B/C ORB LEFT WING BOT (XEBL82)

ALPHA (2) = .004 BETA (1) = .171

SECTION (1)LEFT WING BOT SURF DEPENDENT VARIABLE CP

2Y/BW	.2990	.3640	.4270	.5340	.6730	.7800	.8870	.9720
X/CW								
.637		.0168						
.650						-.1030		
.670								-.4616
.700					-.1113			
.725				-.1221				
.750						-.4221	-.5169	
.760			-.0994					
.775				-.6332	-.3539			
.799		-.0793						
.809			-.5370					
.834	-.1128							
.839		-.4640						
.850				-.5268	-.4501	-.5488		
.857			-.5263					
.862								-.3300
.865	-.4768							
.879		-.4810						
.900	-.3256			-.5593			-.2429	
.905			-.5563					
.919		-.4718						
.950				-.3335	-.6242	-.2613		
.953			-.3263					
.955		-.3603						
.965	-.5332							
1.000			-.2518		-.2837		-.2124	

ALPHA (3) = 3.910 BETA (1) = -3.880 MACH = 1.2454 Q = 599.82 P = 552.51 RN/L = 3.0275

SECTION (1)LEFT WING BOT SURF DEPENDENT VARIABLE CP

2Y/BW	.2990	.3640	.4270	.5340	.6730	.7800	.8870	.9720
X/CW								
.010	.0366	-.0440	.4418	.2322	.1202	.1293	.1579	
.020	.0000	-.0032	.3335	.1233	.1024	.0394	-.0155	.0739
.040		.0212	.2163					
.050	.0344			.0414	-.0080	.0244	.0024	
.070								.0274
.080				.0419				
.090			.1273					
.095		.1015						
.094	.0092							
.150				.0281	.0423	.0657	.0732	
.157								-.0714
.163		.2104						

AMES 11-073(OA148) -140A/B/C ORB LEFT WING BOT (XEBL82)

ALPHA (3) = 3.910 BETA (1) = -3.880

SECTION (1)LEFT WING BOT SURF DEPENDENT VARIABLE CP

2Y/BW	.2990	.3640	.4270	.5340	.6730	.7800	.8870	.9720
X/CW								
.177			.0722					
.229	-.0135							
.245		.0708						
.260				.0664	.0602	.0723	.0361	
.274			.0654					
.345								.0051
.390		.0533						
.400				.0585	.0889		.0434	
.402			.0582					
.503								-.0198
.550				.0671	.0790			
.565			-.4995					
.670							-.0048	
.677		.0855						
.690						-.0068		
.670								-.4582
.700					-.0415			
.725				-.0491				
.750						-.4042	-.4445	
.750			-.0487					
.775				-.5784	-.3918			
.799		-.0377						
.808			-.4785					
.834	-.0631							
.839		-.4251						
.850				-.4917	-.3978	-.5166		
.857			-.4800					
.862								-.4274
.865	-.4354							
.879		-.4628						
.900	-.2592			-.5346			-.5658	
.905			-.5418					
.919		-.4050						
.930				-.2784	-.4027	-.5127		
.937			-.2650					
.940		-.2698						
.945	-.4683							
1.000			-.1957		-.2836		-.2320	

DATE 10 FEB 78 TABULATED PRESSURE DATA - OA148 (AMES 11-073-1)

AMES 11-073(OA148) -140A/B/C CRB LEFT WING BOT (XE8L82)

ALPHA (3) = 3.950 BETA (2) = .192 MACH = 1.2454 Q = 599.82 P = 552.51 RN/L = 3.0275

SECTION (1)LEFT WING BOT SURF DEPENDENT VARIABLE CP

Y/BW	.2390	.3540	.4270	.5340	.6730	.7800	.8870	.9720
X/CW								
.010	-.0914	-.2350	.3776	.2955	.1673	.1584	.1926	
.020	.0000	-.1184	.3742	.1780	.1361	.0899	.0517	.0228
.040		-.0748	.2485					
.050	-.0235			.1112	.0393	.0661	.0599	
.069								.0005
.080				.0991				
.091			.1491					
.096		.0605						
.094	-.0253							
.150				.0621	.0887	.0923	.0826	
.157								-.0880
.163		.2050						
.177			.0915					
.229	-.0313							
.246		.0969						
.250				.0832	.0765	.0829	.0400	
.274			.0941					
.345								-.0070
.390		.0861						
.400				.0944	.1112		.0683	
.402			.0844					
.503								-.0215
.550				.0857	.0969			
.565			-.5253					
.600							-.0095	
.637		.1089						
.650						-.0012		
.670								-.4982
.700					-.0396			
.725				-.0387				
.750						-.4068	-.4435	
.760			-.0434					
.775				-.5785	-.3927			
.799		-.0461						
.809			-.4715					
.834	-.0657							
.839		-.4147						
.850				-.4848	-.3924	-.5149		
.857			-.4827					
.868								-.4713
.875	-.4376							
.879		-.4477						
.900	-.2392			-.5411			-.5717	
.905			-.5374					
.919		-.4024						

AMES 11-073(OA148) -140A/B/C ORB LEFT WING BOT (XEBL82)

ALPHA (3) = 3.950 BETA (2) = .192

SECTION (1)LEFT WING BOT SURF DEPENDENT VARIABLE CP

2Y/BW	.2990	.3640	.4270	.5340	.6730	.7800	.8870	.9720
X/CW								
.950				-.2779	-.4521	-.5646		
.953			-.2590					
.955		-.3486						
.965	-.4967							
1.000			-.2019		-.2506		-.2380	

ALPHA (3) = 3.915 BETA (3) = 4.246 MACH = 1.2454 Q = 599.82 P = 552.51 RN/L = 3.0275

SECTION (1)LEFT WING BOT SURF DEPENDENT VARIABLE CP

2Y/BW	.2990	.3640	.4270	.5340	.6730	.7800	.8870	.9720
X/CW								
.010	-.2624	-.3713	.2798	.3488	.2074	.2339	.2508	
.020	.0000	-.2198	.3248	.2413	.1790	.1722	.1279	-.0503
.040		-.1713	.2599					
.050	-.1035			.1695	.0952	.1141	.1228	
.069								-.0401
.080				.1349				
.081			.1691					
.085		.0097						
.094	-.0827							
.150				.0995	.1190	.1178	.1132	
.157								-.1021
.153		.1877						
.174			.1135					
.229	-.0665							
.245		.0949						
.250				.1085	.1059	.1120	.0773	
.274			.1213					
.345								-.0439
.340		.1102						
.400				.1225	.1463		.0921	
.402			.1147					
.503								-.0559
.550				.0977	.0999			
.565			-.4824					
.600							-.0098	
.637		.1150						
.650						-.0112		
.670								-.5271
.700					-.0359			
.725				-.0368				
.750						-.4129	-.4454	
.760			-.0406					

AMES 11-073(OA148) -140A/B/C ORB LEFT WING BOT (XE8L82)

ALPHA (3) = 3.915 BETA (3) = 4.246

SECTION (1)LEFT WING BOT SURF DEPENDENT VARIABLE CP

2Y/BW	.2990	.3640	.4270	.5340	.6730	.7800	.8870	.9720
X/CW								
.775				-.5789	-.3887			
.798		-.0401						
.808			-.4727					
.834	-.0634							
.839		-.4063						
.850				-.4786	-.3761	-.5208		
.857			-.4780					
.862								-.5000
.865	-.4347							
.879		-.4090						
.900	-.2352			-.5508			-.5754	
.905			-.5111					
.919		-.3971						
.950				-.2780	-.4700	-.5431		
.953			-.2644					
.955		-.4129						
.965	-.5184							
1.000			-.2006		-.2423		-.2638	

ALPHA (4) = 7.875 BETA (1) = .170 MACH = 1.2457 Q = 599.87 P = 552.28 RN/L = 3.0295

SECTION (1)LEFT WING BOT SURF DEPENDENT VARIABLE CP

2Y/BW	.2990	.3640	.4270	.5340	.6730	.7800	.8870	.9720
X/CW								
.010	-.2202	-.4739	.2316	.5579	.5078	.5654	.5694	
.020	.0000	-.2054	.3460	.4503	.4517	.4586	.4735	-.0459
.040		-.1433	.3305					
.050	-.0205			.3514	.3434	.3535	.3984	
.069								.0196
.080				.2860				
.081			.2599					
.096		.0393						
.094	.0038							
.150				.2430	.2843	.3099	.3022	
.157								-.0592
.163		.2442						
.177			.2116					
.229	.0220							
.246		.1586						
.250				.2307	.2499	.2941	.2352	
.274			.2157					
.345								.0374
.340		.1954						

AMES 11-073(OA148) -140A/B/C ORB LEFT WING BOT (XEBL82)

ALPHA (4) = 7.875 BETA (1) = .170

SECTION (1)LEFT WING BOT SURF DEPENDENT VARIABLE CP

2Y/BW	.2990	.3540	.4270	.5340	.6730	.7800	.8870	.9720
X/CW								
.400				.2419	.2947		.2168	
.402			.2181					
.503								.0258
.550				.2135	.2013			
.555			-.5554					
.600							.0799	
.637		.2140						
.650						.0738		
.670								-.4668
.700					.0375			
.725				.0382				
.750						-.3685	-.3938	
.760			.0284					
.775				-.5494	-.3593			
.799		.0292						
.809			-.4070					
.834	.0133							
.839		-.3853						
.850				-.4418	-.4812	-.4740		
.857			-.4374					
.862								-.4339
.865	-.3855							
.879		-.4046						
.900	-.1578			-.5097			-.5377	
.905			-.5003					
.919		-.3345						
.950				-.3253	-.5035	-.5550		
.973			-.3139					
.975		-.3780						
[illegible]	-.4555							
1.000			-.1638		-.2051		-.3391	

ALPHA (5) = 11.893 BETA (1) = -3.862 MACH = 1.2456 Q = 600.06 P = 552.51 RN/L = 3.0278

SECTION (1)LEFT WING BOT SURF DEPENDENT VARIABLE CP

2Y/BW	.2990	.3540	.4270	.5340	.6730	.7800	.8870	.9720
X/CW								
.010	-.1720	-.4122	.3058	.7083	.7057	.7598	.7446	
.020	.0000	-.1097	.4569	.6144	.6524	.6828	.6856	-.0321
.040		-.0376	.4722					
.050	.0747			.5070	.5431	.5807	.5949	
.059								.0807
.080				.4431				

AMES 11-073(OA148) -140A/B/C ORB LEFT WING BOT (XE8L82)

ALPHA (S) = 11.893 BETA (I) = -3.862

SECTION (1)LEFT WING BOT SURF DEPENDENT VARIABLE CP

2Y/BW	.2990	.3640	.4270	.5340	.6730	.7800	.8870	.9720
X/CW								
.081			.4057					
.086		.1604						
.094	.1019							
.150				.3989	.4631	.5013	.4549	
.157								-.0321
.163		.3812						
.177			.3478					
.229	.1326							
.246		.2808						
.250				.3838	.4285	.4412	.3822	
.274			.3428					
.345								.1278
.390		.3205						
.400				.3804	.4059		.3314	
.402			.3686					
.603								.1224
.550				.3050	.3004			
.565			-.5603					
.600							.1669	
.637		.3125						
.650						.1524		
.670								-.3981
.700					.1084			
.725				.1113				
.750						-.3143	-.3510	
.760			.0811					
.775				-.5610	-.3142			
.798		.0786						
.808			-.3690					
.834	.0716							
.839		-.3872						
.850				-.4080	-.4583	-.4279		
.857			-.4060					
.862								-.4344
.865	-.3505							
.879		-.4188						
.900	-.1223			-.4732			-.4895	
.905			-.4718					
.919		-.2955						
.950				-.5232	-.4943	-.5179		
.953			-.4389					
.955		-.3347						
.985	-.4118							
1.000			-.1731		-.3721		-.4224	

AMES 11-073(OA148) -140A/B/C ORB LEFT WING BOT (XE8L82)

ALPHA (5) = 11.948 BETA (2) = .178 MACH = 1.2456 Q = 600.06 P = 552.51 RN/L = 3.0278

SECTION (1)LEFT WING BOT SURF DEPENDENT VARIABLE CP

2Y/BW	.2990	.3640	.4270	.5340	.6730	.7800	.8870	.9720
X/CW								
.010	-.3582	-.5044	.1077	.6367	.6530	.6806	.6591	
.020	.0000	-.2241	.2928	.5811	.6256	.6506	.6380	-.2027
.040		-.1510	.3806					
.050	-.0161			.4981	.5391	.5665	.5742	
.069								-.0435
.080				.4360				
.081			.3460					
.086		.0734						
.094	.0417							
.150				.3944	.4675	.4893	.4431	
.157								-.0648
.163		.3152						
.177			.3335					
.229	.0889							
.246		.2361						
.250				.3896	.4248	.4382	.3685	
.274			.3475					
.345								.0678
.390		.3254						
.400				.3750	.3953		.3082	
.402			.3722					
.503								.0682
.550				.3018	.2931			
.565			-.5862					
.600							.1509	
.637		.3097						
.650						.1380		
.670								-.4295
.700					.1177			
.725				.1175				
.750						-.3268	-.3612	
.760			.0896					
.775				-.5415	-.3142			
.798		.0862						
.808			-.3595					
.834	.0738							
.839		-.3600						
.850				-.4045	-.4681	-.4291		
.857			-.4064					
.862								-.5027
.865	-.3533							
.879		-.3881						
.900	-.1079			-.4768			-.5020	
.905			-.4649					
.919		-.2848						

AMES 11-073(OA148) -140A/B/C ORB LEFT WING BOT (XE8L82)

ALPHA (5) = 11.948 BETA (2) = .178

SECTION (1)LEFT WING BOT SURF DEPENDENT VARIABLE CP

2Y/BW	.2990	.3640	.4270	.5340	.6730	.7800	.8870	.9720
X/CW								
.950				-.5197	-.4705	-.5296		
.953			-.3836					
.955		-.3344						
.965	-.4233							
1.000			-.2329		-.3685		-.4855	

ALPHA (5) = 11.969 BETA (3) = 4.251 MACH = 1.2456 Q = 600.06 P = 552.51 RN/L = 3.0278

SECTION (1)LEFT WING BOT SURF DEPENDENT VARIABLE CP

2Y/BW	.2990	.3640	.4270	.5340	.6730	.7800	.8870	.9720
X/CW								
.010	-.4802	-.5645	-.0968	.5329	.5730	.5717	.5482	
.020	.0000	-.3363	.1271	.5232	.5695	.5938	.5693	-.3322
.040		-.2583	.2859					
.050	-.1039			.4710	.5204	.5390	.5336	
.069								-.1483
.080				.4216				
.081			.2628					
.085		-.0163						
.094	-.0349							
.150				.3871	.4536	.4766	.4199	
.157								-.1124
.163		.2405						
.177			.3028					
.229	.0340							
.246		.2008						
.250				.3754	.4136	.4231	.3551	
.274			.3448					
.345								.0164
.390		.3231						
.400				.3575	.3811		.2893	
.402			.3576					
.503								-.0804
.550				.2926	.2827			
.565			-.5357					
.600							.1353	
.657		.2969						
.650						.1343		
.670								-.4440
.700					.1248			
.725				.1185				
.750						-.3349	-.3677	
.760			.0828					

AMES 11-073(OA148) -140A/B/C ORB LEFT WING BOT (XE8L82)

ALPHA (5) = 11.969 BETA (3) = 4.251

SECTION (1)LEFT WING BOT SURF DEPENDENT VARIABLE CP

2Y/BW	.2990	.3640	.4270	.5340	.6730	.7800	.8870	.9720
X/CW								
.775				-.5352	-.3162			
798		.0790						
.808			-.3566					
.834	.0658							
.839		-.3519						
.850				-.4022	-.4709	-.4319		
.857			-.3966					
.862								
.865	-.3588							-.5345
.879		-.3579						
.900	-.1133			-.4750			-.5091	
.905			-.4409					
.919		-.2798						
.950				-.5158	-.4479	-.5323		
.953			-.3631					
.955		-.3317						
.965	-.4432							
1.000			-.2546		-.3114		-.5208	

AMES 11-073(OA148) -140A/B/C ORB LEFT WING BOT (XEBL83) (05 AUG 75)

REFERENCE DATA

SREF = 2690.0000 SQ.FT. XMRP = 1076.6800 IN. XO
LREF = 474.0000 IN. YMRP = .0000 IN. YO
BREF = [illegible] IN. ZMRP = 375.0000 IN. ZO
SCALE = .0300

PARAMETRIC DATA

RUDDER = 10.000 SPDBRK = .000
BDFLAP = -11.700 L-ELVN = -10.000
R-ELVN = 10.000 MACH = 1.100

ALPHA (1) = -3.943 BETA (1) = .171 MACH = 1.0992 Q = 599.30 P = 708.59 RN/L = 3.1942

SECTION (1)LEFT WING BOT SURF DEPENDENT VARIABLE CP

2Y/BW	.2990	.3640	.4270	.5340	.6730	.7800	.8870	.9720
X/CW								
.010	-.1333	-.1595	-.1043	-.6194	-.7786	-.6107	-.6183	
.020	.0000	-.1653	-.1403	-.7784	-.8179	-.8517	-.9617	-.9244
.040		-.1474	-.2477					
.050	-.1344			-.6868	-.8227	-.8778	-.8896	
.069								-.8864
.080				-.6346				
.081			-.1749					
.086		-.0420						
.094	-.1348							
.150				-.2702	-.6799	-.7708	-.8023	
.157								-.4903
.163		.0370						
.177			-.1728					
.229	-.1067							
.246		-.0773						
.250				-.1800	-.2211	-.5653	-.7415	
.274			-.1382					
.345								-.8133
.390		-.1019						
.400				-.1153	-.1107		-.3645	
.402			-.1009					
.503								-.6578
.540				-.1118	-.1407			
.555			-.5721					
.600							-.1089	
.637		-.0761						
.650						-.1814		
.670								-.5480
.700					-.2007			
.725				-.2442				
.750						-.5500	-.6955	
.760			-.1430					
.775				-.8936	-.5332			
.799		-.1339						
.809			-.7441					
.834	-.1413							
.839		-.6103						
.850				-.6962	-.6036	-.6950		

AMES 11-073(OA148) -140A/B/C ORB LEFT WING BOT (XE8L83)

ALPHA (1) = -3.943 BETA (1) = .171

SECTION (1)LEFT WING BOT SURF DEPENDENT VARIABLE CP

2Y/BW	.2990	.3640	.4270	.5340	.6730	.7800	.8870	.9720
X/CW								
.857			-.7042					
.862								-.7878
.865	-.6108							
.879		-.6365						
.900	-.4889			-.6033			-.6141	
.905			-.5039					
.919		-.5851						
.950				-.4454	-.7039	-.3617		
.953			-.4098					
.955		-.4100						
.965	-.6743							
1.000			-.3126		-.3598		-.3122	

ALPHA (2) = .065 BETA (1) = .171 MACH = 1.0980 Q = 599.15 P = 710.01 RN/L = 3.1985

SECTION (1)LEFT WING BOT SURF DEPENDENT VARIABLE CP

2Y/BW	.2990	.3640	.4270	.5340	.6730	.7800	.8870	.9720
X/CW								
.010	-.1035	-.0086	.2952	-.2662	-.4621	-.4220	-.3276	
.020	.0000	-.0100	.2269	-.2561	-.4036	-.5507	-.6026	-.2172
.040		.0057	.0646					
.050	-.1019			-.2272	-.3633	-.4487	-.4761	
.069								-.2138
.080				-.1616				
.081			.0046					
.086		.0712						
.094	-.1101							
.150				-.1115	-.0843	-.0747	-.1143	
.157								-.1157
.163		.1660						
.177			-.0288					
.229	-.0633							
.246		.0214						
.250				-.0251	-.0595	-.0867	-.1145	
.274			-.0022					
.345								-.0853
.390		.0195						
.400				.0178	.0377		-.0145	
.402			.0155					
.503								-.1186
.550				.0016	-.0435			
.555			-.6368					
.600							-.1343	

AMES 11-073(OA148) -140A/B/C ORB LEFT WING BOT (XE9L83)

ALPHA (2) = .065 BETA (1) = .171

SECTION (1)LEFT WING BOT SURF DEPENDENT VARIABLE CP

2Y/BW	.2990	.3640	.4270	.5340	.6730	.7800	.8870	.9720
X/CW								
.637		.0154						
.650						-.1392		
.670								-.4454
.700					-.1491			
.725				-.1711				
.750						-.5357	-.7016	
.760			-.0559					
.775				-.8394	-.4254			
.798		-.0316						
.808			-.6939					
.834	-.0800							
.839		-.5889						
.850				-.6531	-.5897	-.6857		
.857			-.6525					
.862								-.3853
.865	-.5636							
.879		-.6071						
.900	-.4014			-.5211			-.3818	
.905			-.4604					
.919		-.5381						
.950				-.3936	-.7381	-.3117		
.953			-.3632					
.955		-.4014						
.965	-.6825							
1.000			-.2778		-.3018		-.2189	

ALPHA (3) = 3.859 BETA (1) = -3.876 MACH = 1.0981 Q = 598.75 P = 709.30 RN/L = 3.1983

SECTION (1)LEFT WING BOT SURF DEPENDENT VARIABLE CP

2Y/BW	.2990	.3640	.4270	.5340	.6730	.7800	.8870	.9720
X/CW								
.010	-.0231	-.0549	.4786	.2032	.1222	.2162	.2676	
.020	.0000	.0045	.4250	.0688	.0912	.1143	.1122	.0844
.040		.0326	.2494					
.050	-.0214			.0511	.0623	.0702	.1050	
.069								.0503
.080				.0586				
.081			.1363					
.085		.1240						
.094	-.0400							
.150				.1211	.1443	.1434	.1128	
.157								-.0476
.163		.2480						

AMES 11-073(OA148) -140A/B/C ORB LEFT WING BOT (XE8L83)

ALPHA (3) = 3.859 BETA (1) = -3.876

SECTION (1)LEFT WING BOT SURF DEPENDENT VARIABLE CP

2Y/BW	.2990	.3640	.4270	.5340	.6730	.7800	.8870	.9720
X/CW								
.177			.0865					
.229	-.0403							
.246		.1015						
.250				.1515	.1489	.1397	.0728	
.274			.1501					
.345								-.0113
.390		.1653						
.400				.1738	.1733		.0944	
.402			.1948					
.503								-.0645
.550				.0984	.0738			
.565			-.6035					
.600							-.0510	
.637		.1310						
.650						-.0523		
.670								-.5865
.700					-.0898			
.725				-.1026				
.750						-.5302	-.6111	
.760			-.0402					
.775				-.7917	-.3689			
.798		-.0163						
.808			-.6620					
.834	-.0761							
.839		-.5460						
.850				-.6259	-.5638	-.6810		
.857			-.6310					
.862								-.3320
.865	-.5776							
.879		-.5688						
.900	-.3704			-.5365			-.2739	
.905			-.4154					
.919		-.4527						
.950				-.3183	-.4723	-.2835		
.953			-.3322					
.955		-.2866						
.965	-.5622							
1.000			-.2072		-.2539		-.2257	

AMES 11-073(OA148) -140A/B/C ORB LEFT WING BOT (XE8L83)

ALPHA (3) = 3.938 BETA (2) = .189 MACH = 1.0981 Q = 598.75 P = 709.30 RN/L = 3.1983

SECTION 11 LEFT WING BOT SURF DEPENDENT VARIABLE CP

2Y/BW	.2990	.3640	.4270	.5340	.6730	.7800	.8870	.9720
X/CW								
.010	-.1637	-.1983	.4551	.2887	.2192	.2883	.3289	
.020	.0000	-.0810	.4372	.1674	.1717	.2016	.1901	.0056
.040		-.0385	.2962					
.050	-.0836			.1348	.1186	.1531	.1634	
.069								.0020
.080				.1258				
.091			.1922					
.086		.1093						
.094	-.0817							
.150				.1635	.1805	.1844	.1269	
.157								-.0674
.163		.2737						
.177			.1498					
.229	-.0512							
.246		.1489						
.250				.1741	.1691	.1609	.0838	
.274			.1735					
.345								-.0558
.390		.1801						
.400				.1785	.1810		.0850	
.402			.1965					
.503								-.0957
.550				.1051	.0739			
.565			-.6824					
.600							-.0599	
.637		.1339						
.650						-.0631		
.670								-.6160
.700					-.0847			
.725				-.0967				
.750						-.5392	-.6183	
.760			-.0304					
.775				-.8032	-.3882			
.798		-.0145						
.808			-.6533					
.834	-.0669							
.839		-.5397						
.850				-.6216	-.5731	-.6829		
.857			-.6216					
.862								-.3240
.875	-.5705							
.879		-.5550						
.900	-.3435			-.5803			-.3350	
.905			-.4509					
.919		-.5034						

AMES 11-073(OA148) -140A/B/C ORB LEFT WING BOT (XEBL83)

ALPHA (3) = 3.908 BETA (2) = .189

SECTION (1)LEFT WING BOT SURF DEPENDENT VARIABLE CP

2Y/BW	.2990	.3640	.4270	.5340	.6730	.7800	.8870	.9720
X/CW								
.950				-.3516	-.5607	-.3237		
.953			-.3396					
.955		-.3881						
.965	-.6596							
1.000			-.2440		-.2546		-.2670	

ALPHA (3) = 3.913 BETA (3) = 4.243 MACH = 1.0981 Q = 598.75 P = 709.30 RN/L = 3.1983

SECTION (1)LEFT WING BOT SURF DEPENDENT VARIABLE CP

2Y/BW	.2990	.3640	.4270	.5340	.6730	.7800	.8870	.9720
X/CW								
.010	-.3626	-.3317	.4122	.3872	.2795	.3350	.3486	
.020	.0000	-.1771	.4389	.2771	2405	.2485	.2413	-.1464
.040		-.1245	.3596					
.050	-.1743			.2249	.1817	.1817	.1936	
.069								-.1070
.080				.1966				
.081			.2645					
.086		.0967						
.094	-.1455							
.150				.1842	.1863	.1817	.1248	
.157								-.1121
.163		.3152						
.177			.2126					
.229	-.0779							
.246		.2055						
.250				.1844	.1669	.1610	.0679	
.274			.1961					
.345								-.1269
.390		.2108						
.400				.1684	.1639		.0545	
.402			.1932					
.503								-.1424
.550				.0900	.0565			
.565			-.5797					
.600							-.0851	
.637		.1194						
.640						-.0917		
.670								-.6210
.700					-.0944			
.725				-.1045				
.740						-.5582	-.6344	
.760			-.0437					

AMES 11-073(OA148) -140A/B/C ORB LEFT WING BOT (XEBL83)

ALPHA (3) = 3.913 BETA (3) = 4.243

SECTION (1)LEFT WING BOT SURF DEPENDENT VARIABLE CP

2Y/BW	.2990	.3640	.4270	.5340	.6730	.7800	.8870	.9720
X/CW								
.775				-.8194	-.4095			
.799		-.0308						
.809			-.6634					
.834	-.0723							
.839		-.5337						
.850				-.6384	-.5643	-.6960		
.857			-.6236					
.862							-.4166	
.865	-.5724							
.879		-.5117						
.900	-.3514			-.6532		-.4318		
.905			-.5388					
.910		-.5386						
.950				-.3792	-.6834	-.4375		
.953			-.3697					
.955		-.5071						
.965	-.6973							
1.000			-.2729		-.2924		-.3132	

ALPHA (4) = 8.023 BETA (1) = .173 MACH = 1.0972 Q = 598.87 P = 710.71 RN/L = 3.1996

SECTION (1)LEFT WING BOT SURF DEPENDENT VARIABLE CP

2Y/BW	.2990	.3640	.4270	.5340	.6730	.7800	.8870	.9720
X/CW								
.010	-.3405	-.6500	.3408	.6321	.5849	.6273	.5933	
.020	.0000	-.3181	.4689	.5497	.5324	.5387	.5138	-.1700
.040		-.2385	.4713					
.050	-.0919			.4436	.4335	.4399	.4264	
.069								-.0764
.080				.3877				
.081			.3973					
.095		.0211						
.094	-.0511							
.152				.3474	.3645	.3675	.2916	
.157								-.0739
.163		.3699						
.177			.3411					
.229	-.0252							
.246		.2962						
.250				.3255	.3194	.3078	.2241	
.274			.3227					
.345								-.0427
.390		.3119						

AMES 11-073(OA148) -140A/B/C ORB LEFT WING BOT (XEBL83)

ALPHA (4) = 8.023 BETA (1) = .173

SECTION (1)LEFT WING BOT SURF DEPENDENT VARIABLE CP

2Y/BW	.2990	.3640	.4270	.5340	.6730	.7800	.8870	.9720
.400				.2836	.2803		.1717	
.402			.3028					
.503								-.0433
.550				.1831	.1639			
.565			-.7400					
.600							.0020	
.637		.2103						
.650						-.0191		
.670								-.5360
.700					-.0155			
.725				-.0236				
.750						-.5147	-.5695	
.760			-.0022					
.775				-.7596	-.5241			
.799		.0083						
.808			-.6177					
.834	-.0257							
.839		-.5220						
.850				-.5942	-.4792	-.6397		
.857			-.5838					
.882								-.4571
.865	-.5469							
.879		-.4862						
.900	-.2708			-.6423			-.6984	
.905			-.4245					
.919		-.4632						
.950				-.3248	-.5076	-.6991		
.953			-.3020					
.965		-.3935						
.965	-.6203							
1.000			-.2245		-.2647		-.3751	

ALPHA (5) = 11.886 BETA (1) = -3.856 MACH = 1.0968 Q = 598.64 P = 710.95 RN/L = 3.1978

SECTION (1)LEFT WING BOT SURF DEPENDENT VARIABLE CP

2Y/BW	.2990	.3640	.4270	.5340	.6730	.7800	.8870	.9720
X/CW								
.010	-.2820	-.5853	.2503	.7664	.7617	.7531	.7070	
.020	.0000	-.2086	.4795	.7171	.7278	.7242	.6794	-.1876
.040		-.1280	.5745					
.050	.0206			.6208	.6271	.6293	.5988	
.069								-.0336
.090				.5526				

AMES 11-073(OA148) -140A/B/C ORB LEFT WING BOT (XE8L83)

ALPHA (5) = 11.038 BETA (1) = -3.855

SECTION (1) LEFT WING BOT SURF DEPENDENT VARIABLE CP

2Y/BW	.2990	.3640	.4270	.5340	.6730	.7800	.8970	.9720
X/CW								
.081			.5295					
.085		.2137						
.094	.0572							
.150				.4922	.5164	.5140	.4430	
.157								-.0555
.163		.4861						
.177			.4696					
.229	.0832							
.245		.4137						
.250				.4451	.4487	.4349	.3575	
.274			.4339					
.345								.0823
.390		.4144						
.400				.3774	.3790		.2751	
.422			.3965					
.503								.0497
.5[illegible]				.2664	.2474			
.566			-.7120					
.600							.0998	
.637		.2812						
.650						.0887		
.670								-.5206
.700					.0620			
.725				.0541				
.750						-.4612	-.5175	
.760			.0106					
.775				-.7153	-.4689			
.798		.0179						
.809			-.5442					
.834	-.0014							
.839		-.5044						
.850				-.5616	-.6177	-.5954		
.857			-.5600					
.862								-.4517
.855	-.5190							
.879		-.4352						
.900	-.2274			-.6452			-.6481	
.905			-.6350					
.919		-.3986						
.950				-.3928	-.6503	-.6821		
.953			-.3487					
.955		-.4769						
.965	-.5508							
1.000			-.1805		-.2891		-.4747	

AMES 11-073(OA148) -140A/B/C ORB LEFT WING BOT (XEEL83)

ALPHA (5) = 11.964 BETA (2) = .179 MACH = 1.0968 Q = 598.64 P = 710.95 RN/L = 3.1978

SECTION (1)LEFT WING BOT SURF DEPENDENT VARIABLE CP

2Y/BW	.2000	.3640	.4270	.5340	.6730	.7800	.8870	.9720
X/CW								
.010	-.5011	-.6587	.0077	.6915	.6950	.6574	.6078	
.020	.0000	-.3329	.2992	.6819	.6907	.6743	.6188	-.3495
.040		-.2455	.4967					
.050	-.0899			.6104	.6266	.6054	.5661	
.069								-.1522
.080				.5539				
.081			.5069					
.085		.0928						
.094	-.0160							
.150				.4914	.5133	.5086	.4205	
.157								-.0802
.163		.4212						
.177			.4708					
.229	.0454							
.246		.3951						
.250				.4439	.4444	.4262	.3409	
.274			.4400					
.345								.0190
.390		.4159						
.400				.3778	.3767		.2538	
.402			.3973					
.503								.0042
.550				.2684	.2432			
.555			-.7559					
.600							.0754	
.637		.2863						
.650						.0815		
.670								-.5425
.700					.0608			
.725				.0657				
.750						-.4755	-.5231	
.760			.0331					
.775				-.7225	-.4723			
.798		.0421						
.808			-.5470					
.934	.0207							
.839		-.4600						
.850				-.5502	-.6135	-.5951		
.857			-.5429					
.862								-.4837
.865	-.5097							
.879		-.4592						
.900	-.2039			-.6503			-.6636	
.905			-.5567					
.919		-.3983						

AMES 11-073(OA148) -140A/B/C ORB LEFT WING BOT (XE8L83)

ALPHA (5) = 11.954 BETA (2) = .179

SECTION (1)LEFT WING BOT SURF DEPENDENT VARIABLE CP

2Y/BW	.2990	.3640	.4270	.5340	.6730	.7800	.8870	.9720
X/CW								
.950				-.4883	-.6191	-.7028		
.953			-.4915					
.955		-.4517						
.965	-.5689							
1.000			-.1947		-.2789		-.5556	

ALPHA (5) = 11.963 BETA (3) = 4.251 MACH = 1.0963 Q = 598.64 P = 710.95 RN/L = 3.1978

SECTION (1)LEFT WING BOT SURF DEPENDENT VARIABLE CP

2Y/BW	.2990	.3640	.4270	.5340	.6730	.7800	.8870	.9720
X/CW								
.010	-.6519	-.6875	-.1393	.5860	.5916	.5313	.4765	
.020	.0000	-.4506	.1601	.6183	.6131	.5902	.5287	-.4923
.040		-.3549	.4279					
.050	-.1970			.5775	.5786	.5468	.5056	
.069								-.2812
.080				.5254				
.081			.4819					
.086		.0243						
.094	-.1015							
.150				.4646	.4788	.4695	.3788	
.157								-.1448
.163		.3854						
.177			.4613					
.229	-.0113							
.245		.3770						
.250				.4217	.4138	.3965	.3018	
.274			.4231					
.345								-.0573
.390		.4075						
.400				.3543	.3481		.2159	
.402			.3768					
.503								-.0888
.550				.2523	.2234			
.565			-.6818					
.600							.0505	
.637		.2780						
.650						.0619		
.670								-.5793
.700					.0490			
.775				.0542				
.790						-.4947	-.5386	
.760			.0266					

AMES 11-073(OA148) -140A/B/C ORB LEFT WING BOT (XEBL83)

ALPHA (5) = 11.963 BETA (3) = 4.251

SECTION (1)LEFT WING BOT SURF DEPENDENT VARIABLE CP

2Y/BW	.2990	.3640	.4270	.5340	.6730	.7800	.8870	.9720
X/CW								
.775				-.7216	-.4864			
.798		.0286						
.808			-.5445					
.834	.0178							
.839		-.4737						
.850				-.5657	-.6043	-.5972		
.857			-.5292					
.862								-.5847
.865	-.5066							
.879		-.4054						
.900	-.2045			-.6546			-.6840	
.905			-.4856					
.919		-.4025						
.950				-.4652	-.5446	-.7068		
.953			-.4812					
.955		-.4369						
.965	-.6123							
1.000			-.2112		-.3127		-.6 94	

AMES 11-073(OA148) -140A/B/C ORB LEFT WING BOT (XEBL84) (05 AUG 75)

REFERENCE DATA

SREF = 2690.0000 SQ.FT. XMRP = 1076.6800 IN. XO
LREF = 474.8000 IN. YMRP = .0000 IN. YO
BREF = 936.0680 IN. ZMRP = 375.0000 IN. ZO
SCALE = .0300

PARAMETRIC DATA

RUDDER = 10.000 SPDBRK = .000
BDFLAP = -11.700 L-ELVN = -10.000
R-ELVN = -10.000 MACH = .900

ALPHA (1) = -3.965 BETA (1) = .165 MACH = .89930 Q = 599.63 R = 1059.2 RN/L = 3.5885

SECTION (1)LEFT WING BOT SURF DEPENDENT VARIABLE CP

2Y/BW	.2930	.3640	.4270	.5340	.6730	.7800	.8870	.9720
X/CW								
.010	-.0340	-.1107	-.3158	-1.0906	-1.2956	-1.0788	-1.1185	
.020	.0000	-.0848	-.3593	-1.2502	-1.3443	-1.3763	-1.1296	-.6681
.040		-.0687	-.4626					
.050	-.0468			-1.1256	-1.2740	-1.2996	-1.1267	
.069								-.6054
.080				-.6858				
.081			-.3715					
.086		-.0146						
.094	-.0439							
.150				-.5106	-.6542	-1.0009	-.9361	
.157								-.3466
.163		-.0816						
.177			-.4042					
.229	-.0019							
.246		-.2355						
.250				-.3533	-.3920	-.6355	-.8281	
.274			-.3153					
.345								-.4696
.390		-.2814						
.400				-.2476	-.2710		-.6134	
.402			-.2228					
.503								-.4712
.550				-.3039	-.3187			
.565			-.7397					
.600							-.3913	
.637		-.2557						
.650						-.3691		
.670								-.8448
.700					-.3693			
.725				-.4005				
.750						-.9342	-.9544	
.760			-.2554					
.775				-1.3677	-.9054			
.798		-.2889						
.808			-.5520					
.824	-.3105							
.839		-.7845						
.850				-.6425	-.9150	-.5984		

AMES 11-073(OA148) -140A/B/C ORB LEFT WING BOT (XEBL84)

ALPHA (1) = -3.965 BETA (1) = .165

SECTION (1)LEFT WING BOT SURF DEPENDENT VARIABLE CP

2Y/BW	.2990	.3640	.4270	.5340	.6730	.7800	.8870	.9720
X/CW								
.857			-.6049					
.862								-.9444
.865	-.9618							
.879		-.5385						
.900	-.5893			-.5576			-.5656	
.905			-.6208					
.919		-.5383						
.950				-.5354	-.4797	-.4763		
.953			-.5677					
.965		-.4823						
.975	-.4028							
1.000			-.3607		-.3358		-.3346	

ALPHA (2) = .057 BETA (1) = .165 MACH = .89770 Q = 598.28 P = 1060.7 RN/L = 3.5863

SECTION (1)LEFT WING BOT SURF DEPENDENT VARIABLE CP

2Y/BW	.2990	.3640	.4270	.5340	.6730	.7800	.8870	.9720
X/CW								
.010	.0426	.1213	.1947	-.4648	-.6716	-.7070	-.6269	
.020	.0000	.1223	.1152	-.4787	-.5776	-.6389	-.7826	-.3231
.030		.1367	-.0501					
.050	.0274			-.3656	-.4587	-.5534	-.6589	
.069								-.3255
.080				-.2873				
.081			-.1174					
.086		.1475						
.094	.0241							
.150				-.1925	-.1992	-.2274	-.2993	
.157								-.2318
.163		.0844						
.177			-.1277					
.229	.0566							
.246		-.0831						
.250				-.1334	-.1833	-.2245	-.2691	
.274			-.1070					
.345								-.1623
[illegible]		-.0928						
[illegible]				-.1257	-.1428		-.2012	
.412			-.0792					
.503								-.2130
.550				-.2046	-.2197			
.555			-.8880					
[illegible]							-.3065	

AMES 11-073(OA148) -140A/B/C ORB LEFT WING BOT (XEBL84)

ALPHA (2) = .057 BETA (1) = .165

SECTION (1)LEFT WING BOT SURF DEPENDENT VARIABLE CP

2Y/BW	.2930	.3640	.4270	.5340	.6730	.7800	.8870	.9720
X/CW								
.637		-.1632						
.650						-.3679		
.670								-.7006
.700					-.3670			
.725				-.3796				
.750						-.7466	-1.1099	
.760			-.2182					
.775				-1.3497	-.8392			
.798		-.2228						
.808			-.5759					
.834	-.2448							
.839		-.8027						
.850				-.6368	-.8934	-.5556		
.857			-.6043					
.862								-.4953
.865	-.8960							
.879		-.5248						
.900	-.6176			-.5258			-.4432	
.905			-.6208					
.919		-.5231						
.950				-.4913	-.4663	-.5271		
.953			-.5531					
.955		-.4577						
.965	-.3929							
1.000			-.3444		-.3482		-.2903	

ALPHA (3) = 3.889 BETA (1) = -3.885 MACH = .89803 Q = 598.38 P = 1060.0 RN/L = 3.5814

SECTION (1)LEFT WING BOT SURF DEPENDENT VARIABLE CP

2Y/BW	.2930	.3640	.4270	.5340	.6730	.7800	.8870	.9720
X/CW								
.010	.0314	.1303	.4078	.1020	.0196	.1210	.1409	
.020	.0000	.1732	.3440	-.0226	-.0041	-.0125	-.0321	-.0865
.040		.1992	.1632					
.050	.0648			-.0324	-.0601	-.0490	-.0615	
.059								-.1473
.080				-.0324				
.091			.0649					
.096		.2379						
.094	.0855							
.150				.0014	-.0073	-.0135	-.0759	
.164								
.183		.2018						-.1466

AMES 11-073(OA148) -140A/B/C ORB LEFT WING BOT (XE8L84)

ALPHA (3) = 3.888 BETA (1) = -3.885

SECTION (1)LEFT WING BOT SURF DEPENDENT VARIABLE CP

2Y/BW	.2990	.3640	.4270	.5340	.6730	.7800	.8870	.9720
X/CW								
.177			.0264					
.229	.1031							
.246		.0393						
.250				.0058	-.0191	-.0481	-.0997	
.274			.0206					
.345								-.2001
.390		.0323						
.400				-.0205	-.0261		-.1158	
.402			.0197					
.503								-.2309
.540				-.1172	-.1346			
.555			-.9241					
.600							-.2859	
.637		-.0875						
.650						-.2956		
.670								-.6602
.700					-.3323			
.745				-.3294				
.750						-.8028	-.6123	
.760			-.1800					
.775				-1.3055	-.8290			
.798		-.1764						
.808			-.5619					
.834	-.1889							
.839		-.6420						
.850				-.6184	-.8254	-.5297		
.857			-.5966					
.852								-.3093
.865	-.9311							
.879		-.5158						
.900	-.5535			-.4581			-.4105	
.905			-.6093					
.919		-.4568						
.950				-.4021	-.4617	-.3545		
.953			-.4978					
.965		-.3296						
.985	-.3190							
1.000			-.2944		-.2842		-.2989	

AMES 11-073(OA148) -140A/B/C ORB LEFT WING BOT (XE8L84)

ALPHA (3) = 4.032 BETA (2) = .164 MACH = .89803 Q = 598.38 P = 1060.0 RN/L = 3.5814

SECTION LEFT WING BOT SURF DEPENDENT VARIABLE CP

2Y/B	.2930	.3640	.4270	.5340	.6730	.7800	.8870	.9720
X/CW								
.010	-.0687	.0051	.3836	.1953	.1024	.1721	.1685	
.020	.0000	.1077	.3631	.0722	.0635	.0516	.0274	-.2041
.040		.1468	.2226					
.050	.0345			.0406	.0002	-.0095	-.0260	
.069								-.2267
.080				.0221				
.081			.1099					
.086		.2249						
.094	.0461							
.150				.0257	.0113	-.0061	-.0766	
.157								-.1868
.163		.2237						
.177			.0539					
.229	.1006							
.246		.0673						
.250				.0190	-.0149	-.0407	-.1141	
.274			.0385					
.345								-.2667
.390		.0493						
.400				-.0161	-.0310		-.1336	
.402			.0229					
.503								-.2634
.550				-.1184	-.1419			
.565			-.9589					
.600							-.3164	
.637		-.0782						
.640						-.3477		
.670								-.5966
.700					-.3198			
.705				-.3031				
.740						-.8386	-.7099	
.760			-.1708					
.775				-1.3109	-.8181			
.798		-.1683						
.809			-.5901					
.834	-.1958							
.839		-.8270						
.850				-.6152	-.8296	-.5663		
.870			-.6237					
.882								-.3318
.885	-.8994							
.879		-.5213						
.900	-.6174			-.4825			-.4031	
.905			-.5208					
.919		-.4870						

AMES 11-073(OA148) -140A/B/C ORB LEFT WING BOT (XE8LB4)

ALPHA (3) = 4.092 BETA (2) = .164

SECTION (1)LEFT WING BOT SURF DEPENDENT VARIABLE CP

2Y/BW	.2990	.3640	.4270	.5340	.6730	.7800	.8870	.9720
X/CW								
.950				-.4262	-.4516	-.3679		
.953			-.4889					
.955		-.4122						
.965	-.3749							
1.000			-.2998		-.2982		-.2796	

ALPHA (3) = 3.996 BETA (3) = 4.248 MACH = .89803 Q = 598.38 P = 1060.0 RN/L = 3.5814

SECTION (1)LEFT WING BOT SURF DEPENDENT VARIABLE CP

2Y/BW	.2990	.3640	.4270	.5340	.6730	.7800	.8870	.9720
X/CW								
.010	-.2031	-.1484	.3045	.2564	.1549	.2236	.2035	
.020	.0000	-.0057	.3321	.1432	.1148	.1049	.0823	-.3522
.040		.0455	.2457					
.060	-.0256			.0942	.0384	.0307	.0080	
.069								-.3187
.080				.0597				
.081			.1364					
.085		.1838						
.094	.0099							
.150				.0386	.0262	.0083	-.0728	
.157								-.2331
.163		.2291						
.177			.0729					
.229	.0759							
.246		.0773						
.250				.0273	-.0085	-.0329	-.1196	
.274			.0485					
.345								-.3408
.390		.0511						
.400				-.0137	-.0336		-.1483	
.402			.0220					
.403								-.3409
.580				-.1199	-.1456			
.585			-.9484					
.600							-.3355	
.637		-.0767						
.650						-.3685		
.670								-.4728
.700					-.3052			
.740				-.2719				
.770						-.8303	-.6183	
.780			-.1815					

AMES 11-073(OA148) -140A/B/C ORB LEFT WING BOT (XEBL84)

ALPHA (3) = 3.996 BETA (3) = 4.248

SECTION (1)LEFT WING BOT SURF DEPENDENT VARIABLE CP

2Y/BW	.2990	.3640	.4270	.5340	.6730	.7800	.8870	.9720
X/CW								
.775				-1.3217	-.7258			
.798		-.1699						
.808			-.5946					
.834	-.1994							
.839		-.8398						
.850				-.5998	-.7677	-.5986		
.857			-.6163					
.862							-.3355	
.865	-.8788							
.879		-.5328						
.900	-.6095			-.4917		-.4269		
.905			-.6134					
.919		-.5214						
.950				-.4398	-.4640	-.3887		
.953			-.4976					
.955		-.4261						
.965	-.4713							
1.000			-.3122		-.2941		-.2722	

ALPHA (4) = 8.008 BETA (1) = .163 MACH = .89820 Q = 598.16 P = 1059.3 RN/L = 3.5792

SECTION (1)LEFT WING BOT SURF DEPENDENT VARIABLE CP

2Y/BW	.2990	.3640	.4270	.5340	.6730	.7800	.8870	.9720
X/CW								
.010	-.3592	-.3854	.2841	.5064	.4504	.4776	.4321	
.020	.0000	-.0931	.3961	.4034	.3909	.3871	.3453	-.4522
.040		.0004	.3809					
.050	-.0319			.3008	.2734	.2745	.2432	
.069								-.3289
.080				.2452				
.081			.2824					
.036		.2303						
.094	.0354							
.150				.1983	.1939	.1777	.0934	
.157								-.2077
.163		.3254						
.177			.2058					
.229	.1332							
.246		.1956						
[illegible]				.1503	.1361	.1076	.0158	
[illegible]			.1622					
.345								-.2219
.330		.1612						

AMES 11-073(OA148) -140A/B/C ORB LEFT WING BOT (XEB184)

ALPHA (4) = 8.008 BETA (1) = .163

SECTION (1)LEFT WING BOT SURF DEPENDENT VARIABLE CP

2Y/BW	.2990	.3640	.4270	.5340	.6730	.7800	.8870	.9720
X/CW								
.400				.0846	.0728		-.0574	
.402			.1222					
.503								-.2556
.550				-.0309	-.0607			
.565			-.6681					
.600							-.2386	
.637		.0050						
.650						-.2455		
.670								-.5578
.700					-.2295			
.725				-.1978				
.750						-.8675	-.9625	
.760			-.1408					
.775				-1.3003	-.7348			
.798		-.1387						
.808			-.6710					
.834	-.1677							
.839		-.8601						
.850				-.6933	-.7490	-.6133		
.857			-.6380					
.862								-.3854
.865	-.8999							
.879		-.6004						
.900	-.6546			-.4691			-.4734	
.905			-.6074					
.919		-.4594						
.950				-.4199	-.4817	-.4082		
.953			-.4831					
.955		-.4078						
.965	-.4289							
1.000			-.2820		-.2914		-.4017	

ALPHA (5) = 11.969 BETA (1) = .169 MACH = .89670 Q = 597.36 P = 1061.4 RN/L = 3.5769

SECTION (1)LEFT WING BOT SURF DEPENDENT VARIABLE CP

2Y/BW	.2990	.3640	.4270	.5340	.6730	.7800	.8870	.9720
X/CW								
.010	-.6831	-.4087	.0083	.5640	.5441	.4979	.4338	
.020	.0000	-.1957	.2787	.5442	.5329	.5131	.4488	-.5141
.040		-.1005	.4291					
.050	-.1099			.4663	.4641	.4319	.3842	
.069								-.3491
.080				.4017				

AMES 11-073(OA148) -1 OA/B/C ORB LEFT WING BOT (XESL84)

ALPHA (5) = 11.969 BETA (1) = .169

SECTION # 1 LEFT WING BOT SURF DEPENDENT VARIABLE CP

2Y/BW	.2990	.3540	.4270	.5340	.6730	.7800	.8870	.9720
X/CW								
.091			.3942					
.095		.2081						
.094	.0215							
.150				.3287	.3364	.3212	.2243	
.157								-.2047
.163		.3880						
.177			.3254					
.229	.1770							
.246		.2910						
.250				.2671	.2523	.2270	.1336	
.274			.2744					
.345								-.1759
.390		.2617						
.400				.1846	.1711		.0396	
.402			.2200					
.503								-.2579
.550				.0544	.0236			
.565			-.5922					
.600							-.1847	
.637		.0887						
.650						-.1883		
.670								-.5603
.700					-.1974			
.725				-.1748				
.750						-.8518	-.9471	
.760			-.1529					
.775				-1.2338	-.8639			
.798		-.1476						
.808			-1.0462					
.834	-.1725							
.839		-.8552						
.850				-.9508	-.8075	-1.0131		
.857			-.7950					
.862								-.6203
.865	-.9082							
.879		-.7130						
.900	-.6025			-.5670			-.8058	
.905			-.5643					
.919		-.6220						
.950				-.5405	-.5667	-.7178		
.953			-.5022					
.955		-.4884						
.965	-.6655							
1.000			-.3858		-.4421		-.4854	

AMES 11-073(OA148) -140A/B/C ORB LEFT WING BOT (XEBL85) (05 AUG 75)

REFERENCE DATA

SREF = 2590.0000 SQ.FT. XMRP = 1076.6800 IN. XO
LREF = 474.8000 IN. YMRP = .0000 IN. YO
BREF = 935.0680 IN. ZMRP = 375.0000 IN. ZO
SCALE = .0300

PARAMETRIC DATA

RUDDER = 10.000 SPDBRK = .000
BDFLAP = -11.700 L-ELVN = -10.000
R-ELVN = 10.000 MACH = .600

ALPHA (1) = -3.903 BETA (1) = .164 MACH = .59620 Q = 593.85 P = 2386.4 RN/L = 4.8166

SECTION (1)LEFT WING BOT SURF DEPENDENT VARIABLE CP

2Y/BW	.2990	.3640	.4270	.5340	.6730	.7800	.8870	.9720
X/CW								
.010	-.1103	-.2522	-.5926	-1.8352	-2.0513	-1.8922	-1.7060	
.020	.0000	-.2241	-.6521	-1.4241	-1.7368	-1.5166	-1.5354	-.9293
.040		-.2033	-.6035					
.050	-.1123			-.8148	-.9222	-1.1137	-1.1522	
.069								-.7416
.080				-.6187				
.081			-.4638					
.085		-.1476						
.094	-.1159							
.150				-.4126	-.4673	-.5445	-.5857	
.157								-.3491
.163		-.2208						
.177			-.3351					
.229	-.0975							
.246		-.2985						
.250				-.3093	-.3697	-.4148	-.4245	
.274			-.2722					
.345								-.4790
.390		-.2370						
.400				-.2660	-.2918		-.3559	
.402			-.2238					
.503								-.5519
.550				-.3102	-.3491			
.565			-.2014					
.600							-.5029	
.637		-.2625						
.650						-.5213		
.670								-.7481
.700					-.4988			
.725				-.4495				
.750						-.7908	-.6690	
.760			-.4057					
.775				-1.0980	-.5855			
.798		-.4566						
.809			-.7854					
.834	-.3859							
.859		-.7046						
.850				-.3940	-.3995	-.3556		

AMES 11-073(OA149) -140A/B/C ORR LEFT WING BOT (XEBL85)

ALPHA (1) = -3.903 BETA (1) = .164

SECTION (1 LEFT WING BOT SURF DEPENDENT VARIABLE CP

2Y/BW	.2990	.3640	.4270	.5340	.6730	.7800	.8870	.9720
X/CW								
.857			-.4831					
.882								-.7585
.885	-.6781							
.879		-.4542						
.900	-.4750			-.2879			-.2691	
.905			-.2774					
.919		-.2947						
.940				-.2460	-.2741	-.1494		
.953			-.1903					
.965		-.2057						
.985	-.2616							
1.000			-.1299		-.1774		-.1170	

ALPHA (2) = .072 BETA (1) = .163 MACH = .59620 Q = 593.87 P = 2387.1 RN/L = 4.8289

SECTION (1)LEFT WING BOT SURF DEPENDENT VARIABLE CP

2Y/BW	.2990	.3640	.4270	.5340	.6730	.7800	.8870	.9720
X/CW								
.010	-.0092	.0468	.0459	-.6079	-.7401	-.8131	-.8039	
.020	.0000	.0368	-.0368	-.5869	-.6016	-.6957	-.8176	-.3102
.040		.0422	-.1795					
.050	-.0181			-.3802	-.4326	-.4970	-.5322	
.069								-.2780
.080				-.3115				
.081			-.1992					
.086		.0452						
.094	-.0294							
.150				-.2176	-.2435	-.2649	-.2982	
.157								-.2108
.163		-.0348						
.177			-.1714					
.229	-.0201							
.246		-.1502						
.250				-.1737	-.2176	-.2400	-.2587	
.274			-.1544					
.345								-.2597
.390		-.1368						
.410				-.1787	-.1980		-.2446	
.472			-.1428					
.503								-.3297
.560				-.2541	-.2823			
.595			-.2432					
.700							-.4053	

AMES 11-073(OA148) -140A/B/C ORB LEFT WING BOT (XEBL85)

ALPHA (2) = .072 BETA (1) = .163

SECTION (1)LEFT WING BOT SURF DEPENDENT VARIABLE CP

2Y/BW	.2990	.3640	.4270	.5340	.6730	.7800	.8870	.9720
X/CW								
.637		-.2053						
.650						-.4661		
.675								-.3994
.700					-.4651			
.725				-.4290				
.750						-.7573	-.5628	
.760			-.3780					
.775				-1.1090	-.5755			
.799		-.4334						
.808			-.8246					
.834	-.3691							
.839		-.6190						
.850				-.3663	-.4016	-.3300		
.857			-.4767					
.882								-.2564
.885	-.6803							
.879		-.4295						
.900	-.4785			-.2698			-.2437	
.906			-.2779					
.919		-.2906						
.950				-.2314	-.2641	-.1271		
.943			-.1944					
.945		-.1932						
.975	-.2424							
1.000			-.1143		-.1593		-.0992	

ALPHA (3) = 4.077 BETA (1) = .160 MACH = .59680 Q = 595.04 P = 2386.4 RN/L = 4.8327

SECTION (1)LEFT WING BOT SURF DEPENDENT VARIABLE CP

2Y/BW	.2990	.3640	.4270	.5340	.6730	.7900	.8870	.9720
X/CW								
.010	-.0927	-.0548	.2823	.1173	.0616	.1358	.1266	
.020	.0000	.0352	.2839	.0054	.0177	.0040	-.0141	-.1211
.040		.0736	.1240					
.050	-.0027			-.0210	-.0508	-.0542	-.0772	
.059								-.1394
.080				-.0377				
.081			.0278					
.086		.1402						
.094	.0055							
.150				-.0363	-.0472	-.0470	-.1005	
.154								-.1676
.163		.1163						

TABULATED PRESSURE DATA - OA148 (AMES 11-073-1)

AMES 11-073(OA148) -140A/B/C ORB LEFT WING BOT (XE8L85)

ALPHA 31 = 4.077 BETA (1) = .160

SECTION (1)LEFT WING BOT SURF DEPENDENT VARIABLE CP

Y/BW	.2990	.3640	.4270	.5340	.6730	.7800	.8870	.9720
X/CW								
.177			-.0169					
.229	.0375							
.246		-.0127						
.250				-.0499	-.0747	-.0963	-.1249	
.274			-.0333					
.345								-.1918
.370		-.0282						
.400				-.0906	-.1039		-.1652	
.400			-.0552					
.578								-.2765
.580				-.1895	-.2190			
.645			-.2513					
.600							-.3672	
.647		-.1458						
.650						-.4283		
.670								-.3350
.700					-.4276			
.725				-.4005				
.750						-.7768	-.5525	
.760			-.3555					
.775				-1.1062	-.5619			
.799		-.4104						
.808			-.8559					
.834	-.3489							
.839		-.5865						
.850				-.3448	-.3836	-.3490		
.857			-.4409					
.862								-.1609
.865	-.6608							
.879		-.4158						
.900	-.4702			-.2488			-.2225	
.905			-.2718					
.919		-.2914						
.950				-.2052	-.2356	-.1195		
.953			-.1693					
.955		-.1863						
.965	-.2401							
1.000			-.0855		-.1339		-.0308	

AMES 11-073(OA148) -140A/B/C ORB LEFT WING BOT (XEBL85)

ALPHA (4) = 8.047 BETA (1) = .158 MACH = .59710 Q = 595.63 P = 2386.4 RN/L = 4.8284

SECTION (1)LEFT WING BOT SURF DEPENDENT VARIABLE CP

2Y/BW	.2900	.3640	.4270	.5340	.6730	.7800	.8870	.9720
X/CW								
.010	-.3701	-.5332	.1320	.4160	.3969	.4177	.3826	
.020	.0000	-.2053	.2765	.3279	.3436	.3482	.3252	-.4854
.040		-.1026	.2826					
.050	-.0640			.2266	.2266	.2274	.2101	
.069								-.3271
.080				.1670				
.081			.1918					
.086		.1357						
.094	-.0081							
.150				.1132	.1244	.1097	.0510	
.157								-.2233
.163		.2196						
.177			.1153					
.229	.0680							
.246		.0975						
.250				.0674	.0530	.0337	-.0195	
.274			.0770					
.345								-.2321
.390		.0662						
.400				-.0044	-.0208		-.1062	
.402			.0275					
.503								-.3182
.550				-.1236	-.1514			
.565			-.2737					
.600							-.3357	
.637		-.0879						
.650						-.3826		
.670								-.3516
.700					-.3752			
.725				-.3600				
.750						-.7593	-.6733	
.760			-.3266					
.775				-1.1071	-.4946			
.798		-.3849						
.808			-.8408					
.834	-.3271							
.839		-.5733						
.850				-.3229	-.3876	-.3595		
.857			-.4221					
.862								-.1860
.865	-.6345							
.879		-.4117						
.900	-.4595			-.2178			-.1982	
.905			-.2741					
.919		-.3028						

DATE 13 FEB 76 TABULATED PRESSURE DATA - OA148 (AMES 11-073-1)

AMES 11-073(OA148) -140A/B/C ORB LEFT WING BOT (XEBL85)

ALPHA (4) = 8.047 BETA (1) = .158

SECTION (1)LEFT WING BOT SURF DEPENDENT VARIABLE CP

2Y/BW	.2990	.3640	.4270	.5340	.6730	.7800	.8870	.9720
X/CW								
.950				-.1795	-.2084	-.1221		
.953			-.1671					
.955		-.1904						
.965	-.2676							
1.000			-.0699		-.1195		-.0509	

ALPHA (5) = 12.046 BETA (1) = .156 MACH = .59710 Q = 595.63 P = 2386.4 RN/L = 4.8340

SECTION (1)LEFT WING BOT SURF DEPENDENT VARIABLE CP

2Y/BW	.2990	.3640	.4270	.5340	.6730	.7800	.8870	.9720
X/CW								
.010	-.7614	-1.0778	-.3038	.3890	.3939	.2634	.2109	
.020	.0000	-.5134	.0729	.4335	.4410	.4159	.3480	-1.0705
.040		-.3620	.3131					
.050	-.1719			.3776	.3995	.3733	.3376	
.069								-.6622
.080				.3099				
.081			.3002					
.086		.0747						
.094	-.0434							
.150				.2344	.2532	.2504	.1570	
.157								-.3163
.163		.2806						
.177			.2306					
.229	.0916							
.246		.1943						
.250				.1761	.1591	.1458	.0690	
.274			.1787					
.345								-.2638
.390		.1607						
.400				.0849	.0656		-.0377	
.422			.1103					
.503								-.3456
.550				-.0540	-.0859			
.565			-.2937					
.600							-.3027	
.637		-.0188						
.650						-.3471		
.670								-.3890
.700					-.3493			
.725				-.3320				
.750						-.7216	-.5934	
.760			-.3000					

AMES 11-073(OA148) -140A/B/C OB LEFT WING BOT (XE8L85)

ALPHA (5) = 12.046 BETA (1) = .156

SECTION (1)LEFT WING BOT SURF DEPENDENT VARIABLE CP

2Y/BW	.2930	.3640	.4270	.5340	.6730	.7800	.8870	.9720
X/CW								
.775				-1.1533	-.4784			
.728		-.3537						
.803			-.8530					
.834	-.2938							
.833		-.5592						
.950				-.3249	-.3810	-.3766		
.957			-.4128					
.982								-.2697
.865	-.6189							
.879		-.4063						
.930	-.4399			-.2135			-.2482	
.935			-.2836					
.919		-.3136						
.950				-.1600	-.2057	-.1318		
.953			-.1691					
.946		-.1981						
.965	-.2949							
1.000			-.0603		-.1064		-.0326	